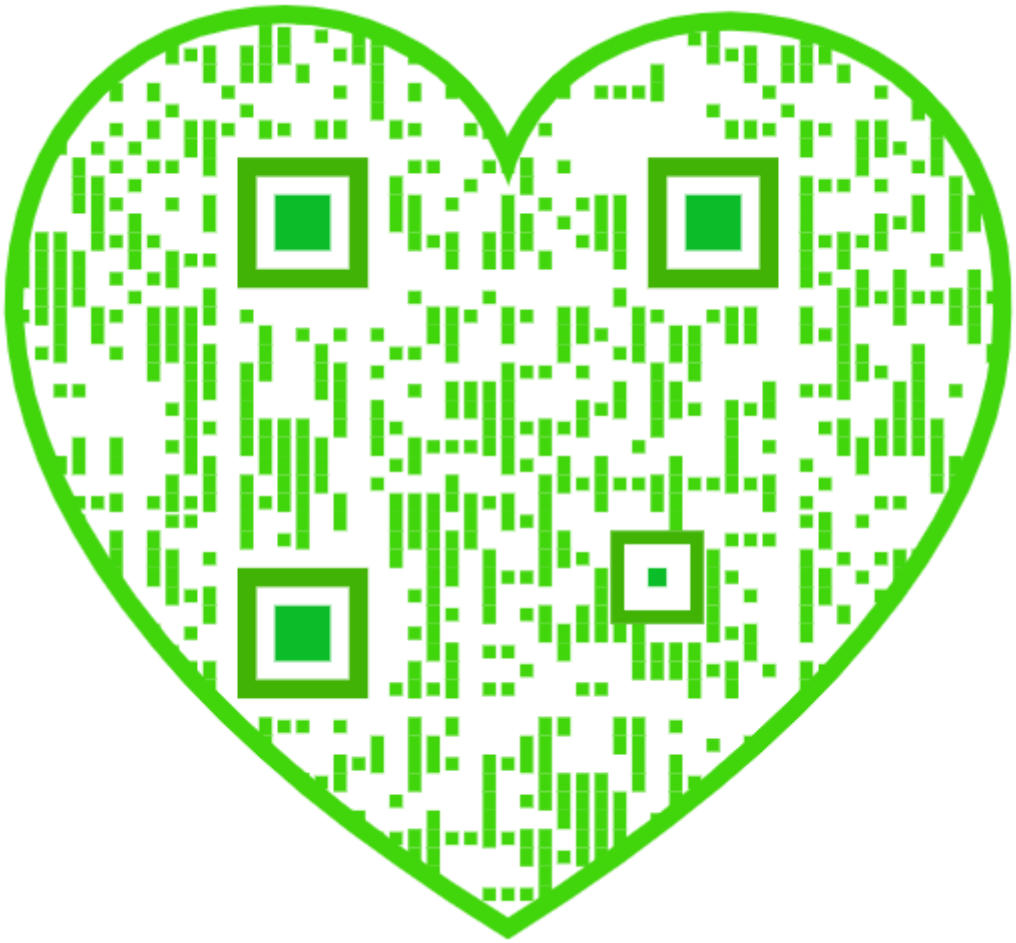

INTERNATIONAL LIBRARY OF TECHNOLOGY

A SERIES OF TEXTBOOKS FOR PERSONS ENGAGED IN THE ENGINEERING PROFESSIONS AND TRADES OR FOR THOSE WHO DESIRE INFORMATION CONCERNING THEM. FULLY ILLUSTRATED AND CONTAINING NUMEROUS PRACTICAL EXAMPLES AND THEIR SOLUTIONS

LOCOMOTIVE BOILERS
STEAM, CYLINDERS, AND VALVE GEARS
LOCOMOTIVE MANAGEMENT
BREAKDOWNS
COMPOUND LOCOMOTIVES

197

SCRANTON:
INTERNATIONAL TEXTBOOK COMPANY

27

Copyright, 1901, 1902, by INTERNATIONAL TEXTBOOK COMPANY.

Entered at Stationers' Hall, London.

Locomotive Boilers: Copyright, 1898, 1899, 1900, by THE COLLIERY ENGINEER COMPANY.

Steam, Cylinders, and Valve Gears: Copyright, 1899, by THE COLLIERY ENGINEER COMPANY.

Locomotive Management: Copyright, 1901, by THE COLLIERY ENGINEER COMPANY. Entered at Stationers' Hall, London.

Breakdowns: Copyright, 1901, by THE COLLIERY ENGINEER COMPANY. Entered at Stationers' Hall, London.

Compound Locomotives: Copyright, 1900, by THE COLLIERY ENGINEER COMPANY.

Train Rules: Copyright, 1900, by THE COLLIERY ENGINEER COMPANY.

All rights reserved.

73422
SEP 28 1903

PREFACE.

The International Library of Technology is the outgrowth of a large and increasing demand that has arisen for the Reference Libraries of the International Correspondence Schools on the part of those who are not students of the Schools. As the volumes composing this Library are all printed from the same plates used in printing the Reference Libraries above mentioned, a few words are necessary regarding the scope and purpose of the instruction imparted to the students of—and the class of students taught by—these Schools, in order to afford a clear understanding of their salient and unique features.

The only requirement for admission to any of the courses offered by the International Correspondence Schools is that the applicant shall be able to read the English language and to write it sufficiently well to make his written answers to the questions asked him intelligible. Each course is complete in itself, and no textbooks are required other than those prepared by the Schools for the particular course selected. The students themselves are from every class, trade, and profession and from every country; they are, almost without exception, busily engaged in some vocation, and can spare but little time for study, and that usually outside of their regular working hours. The information desired is such as can be immediately applied in practice, so that the student may be enabled to exchange his present vocation for a more congenial one or to rise to a higher level in the one he now pursues. Furthermore, they wish to obtain a good working knowledge of the subjects treated, in the shortest time and in the most direct manner possible.

In meeting these requirements we have produced a set of books that in many respects, and particularly in the general

plan followed, are absolutely unique. In the majority of subjects treated the knowledge of mathematics required is limited to the simplest principles of arithmetic and mensuration, and in no case is any greater knowledge of mathematics needed than the simplest elementary principles of algebra, geometry, and trigonometry, with a thorough, practical acquaintance with the use of the logarithmic table. To effect this result, derivations of rules and formulas are omitted, but thorough and complete instructions are given regarding how, when, and under what circumstances any particular rule, formula, or process should be applied; and whenever possible one or more examples, such as would be likely to arise in actual practice—together with their solutions—are given to illustrate and explain its application.

In preparing these textbooks, it has been our constant endeavor to view the matter from the student's standpoint, and to try and anticipate everything that would cause him trouble. The utmost pains have been taken to avoid and correct any and all ambiguous expressions—both those due to faulty rhetoric and those due to insufficiency of statement or explanation. As the best way to make a statement, explanation, or description clear is to give a picture or a diagram in connection with it, illustrations have been used almost without limit. The illustrations have in all cases been adapted to the requirements of the text, and projections, and sections or outline, partially shaded, or full-shaded perspectives, have been used, according to which will best produce the desired results. Half-tones have been used rather sparingly, except in those cases where the general effect is desired rather than the actual details.

It is obvious that books prepared along the lines mentioned must not only be clear and concise beyond anything heretofore attempted, but they must also possess unequalled value for reference purposes. They not only give the maximum of information in a minimum space, but this information is so ingeniously arranged and correlated, and the indexes are so full and complete, that it can at once be made available to the reader. The numerous examples and explanatory remarks,

together with the absence of long demonstrations and abstruse mathematical calculations, are of great assistance in helping one to select the proper formula, method, or process and in teaching him how and when it should be used.

The present volume is devoted to the construction, operation, and operating of locomotives and locomotive appliances, considered from the standpoint of the men who handle them rather than from that of the designer. It consists of an exhaustive treatise on all types and classes of locomotives and locomotive appliances in regular service, including both the most modern and the more numerous older types. There is also a very thorough and complete discussion on the handling, care, and management of locomotives and of locomotive appliances, with special reference to breakdowns and running repairs, each subject being treated in a concise but complete manner. The work will commend itself to all who are interested in the locomotive and in locomotive running, and prove of invaluable assistance to enginemen.

The method of numbering the pages, cuts, articles, etc. is such that each subject or part, when the subject is divided into two or more parts, is complete in itself; hence, in order to make the index intelligible, it was necessary to give each subject or part a number. This number is placed at the top of each page, on the headline, opposite the page number; and to distinguish it from the page number it is preceded by the printer's section mark (§). Consequently, a reference such as § 16, page 26, will be readily found by looking along the inside edges of the headlines until § 16 is found, and then through § 16 until page 26 is found.

INTERNATIONAL TEXTBOOK COMPANY.

CONTENTS.

LOCOMOTIVE BOILERS.	*Section.*	*Page.*
Types of Boilers	5	1
Construction of Boilers	5	4
Draft Appliances	5	20
Bad Steaming Engines	5	29
Combustion and Firing	5	32
Smoke	5	52
Firing	5	55
Boiler Attachments	6	1
Steam Gauge	6	6
Safety Valves	6	13
Injectors	6	14
Sight-Feed Lubricators	6	43
Independent Air-Pump Lubricators	6	71
Sand Boxes	6	74
Air Sanders	6	77
Boiler Feeding and Management	6	82
Foaming and Priming	6	87
Low Water	6	90
Oil in Boiler	6	91
Scale and Mud	6	92
Corrosion	6	93
Blowing Off	6	95
Excessive Pressure	6	96
Collapsed Flues	6	96
Boiler Inspection	6	97
Boiler Explosions	6	98

	Section.	Page.
STEAM, CYLINDERS, AND VALVE GEARS.		
Work and Energy	7	1
Heat: Effects and Measurement	7	8
Relation Between Heat and Work	7	15
Steam and the Steam Engine	7	16
Steam	7	16
Properties of Saturated Steam	7	20
Steam Tables	7	22
Steam Engine	7	27
Steam Cylinder	7	28
Steam Chest and Slide Valve	7	29
Complete Engine	7	31
Diagrams of Slide-Valve Engine	7	32
Locomotives	7	36
Types of Locomotives	7	36
Details of Engine Construction	7	41
Attaching Boiler to Frames	7	45
Spring Arrangement	7	46
Setting Up Wedges	7	54
Steam-Pipe Connections and Cylinders	8	1
Dome	8	3
Throttle Valve	8	3
Steam Pipes	8	10
Cylinder Saddle and Cylinders	8	12
Cylinder and Steam Chest	8	17
Driving Gear	8	19
The Steam Piston	8	20
Crosshead and Guides	8	27
Connecting-Rods	8	31
Keying Up Rods	8	35
Valve Gear	8	36
Eccentric and Strap	8	38
Link	8	42
Rocker	8	44
Tumbling Shaft	8	45
Slide Valve	8	50
Events of the Stroke	8	52

	Section.	Page.
Valve Gear.—Continued.		
Allen Valve	8	62
Double-Ported Valve	8	64
Balanced Valves	8	66
Piston Valves	8	71
Setting Slide Valves	8	75
LOCOMOTIVE MANAGEMENT.		
Inspection, Care, and Management	9	1
Reporting Work	9	3
Care of Locomotives	9	4
Friction, Lubrication, and Lubricants	9	4
Oiling	9	11
Packing Boxes	9	12
Packing Piston Rods and Valve Stems	9	16
Care of Headlights	9	20
Necessary Tools for Locomotives	9	23
Duties of Engineer Before Attaching His Engine to the Train	9	24
Starting Trains	9	25
Climbing Grades	9	27
Economy in the Use of Steam	9	27
Approaching Stations	9	34
Making Stops	9	35
Use of Sand	9	36
Running Engines in Cold Weather	9	37
Taking Light Engine Over the Road	9	38
Hot Bearings	9	39
Injectors Fail on the Road	9	42
Throttle-Valve or Dry-Pipe Leaking	9	44
Pounds	9	45
Blows	9	47
Broken Steam Chest	9	50
Exhaust Out of Square	9	51
Failure of Spark-Arresting Devices	9	52
Reverse Lever Caught at Short Cut-Off	9	52
Off the Track	9	53
Reducing the Force of the Collision	9	54

	Section.	*Page.*
BREAKDOWNS.		
Breakdowns Common to all Types of Engines	9	57
Disconnecting Rods	9	58
Blocking Crosshead	9	61
Broken Reverse-Lever Reach Rod	9	65
Broken Link Hanger, Saddle Pin, or Tumbling Shaft Arm	9	65
Broken Rocker-Arm	9	66
Broken Eccentric Strap or Rod	9	67
Slipped Eccentric	9	68
Broken Valve Yoke	9	72
Broken Valve-Stem Stuffingbox Gland	9	74
Broken Valve Seat	9	75
Broken False Valve Seat	9	78
Broken Valve	9	78
Broken Steam Chest	9	79
Broken Piston Stuffingbox and Lug of Gland	9	81
Bent Piston Rod	9	81
Broken Cylinder Head	9	82
Broken Steam Chest and Cylinder	9	83
Broken Main Crankpin	9	83
Broken Main-Rod Strap	9	84
Broken Guide	9	85
Broken Crosshead	9	85
Broken Lever	9	85
Throttle Disconnected	9	86
Hole Knocked in Boiler	9	87
Pop Valve or Whistle Blown Out	9	89
Broken Frame	9	91
Broken Wedge Bolt	9	92
Broken Driving Box or Brass	9	92
Broken Axle on Four-Wheeled Engine Truck	9	94
Broken Tender Truck Wheel	9	95
Breakdowns Peculiar to:		
Eight-Wheeled Engines	9	97

	Section.	Page.
Breakdowns Peculiar to:—Continued.		
Mogul Engines	9	106
Atlantic Type Engines	9	119
Northwestern Type Engines	9	125
Ten-Wheeled Engines	9	135
Consolidation Engines	9	142
COMPOUND LOCOMOTIVES.		
Description, Operation, and Operating	10	1
Prominent Types	10	9
Baldwin (Vauclain) System	10	11
Baldwin Two-Cylinder Compound	10	34
Richmond Compound	10	42
Schenectady Compound	10	60
Pittsburg Compound	10	70
Rhode Island Compound	10	78
TRAIN RULES.		
Introduction	11	1
Definitions	11	4
Time-Tables	11	8
Signal Rules	11	11
Train Signals	11	15
Classification of Trains	11	20
Movements of Trains.	11	21
Train Orders	11	31
Rules for Movement by Train Orders	11	32
The Standard Code of the American Railway Association	11	51

ORANGE. *Atmospheric Pressure.*

BLUE. *Live Steam.*

LIGHT BLUE. *Exhaust Steam.*

PURPLE. *Intermediate Pressure Steam.*

KEY TO THE COLOR PLATES.

LOCOMOTIVE BOILERS.

(PART 1.)

TYPES OF BOILERS.

1. The locomotive may be regarded as consisting of three parts: the apparatus for generating the steam (the boiler); the mechanism for utilizing the steam (the engine proper); and the wheels, frames, and springs, which constitute a carriage or vehicle to enable the whole to move from place to place.

For the present, the first of these parts, namely, the boiler, will be dealt with.

2. Locomotive boilers all belong to the horizontal multitubular class, with internal firebox. At the present time, however, there are five types of locomotive boilers in general use: the *straight-top*, the *Belpaire*, the *wagon-top*, the *extended wagon-top*, and the *wide-firebox*. Each type has especial advantages, depending on the service, character of fuel, and water used.

3. Straight-Top Boiler.—Fig. 1 shows a boiler of this type, having a shallow firebox, with its crown sheet stayed by **crown bars,** (a) being a longitudinal section through the center of the boiler, and (b) a cross-section and back-end view of the firebox. The crown bars r support the crown sheet C, while the diagonal stays e support the back boiler head B and front tube-sheet F. The tubes F''' extend between the front and back tube-sheets F and F', and in this type of boiler, as shown in Fig. 1, the barrel W containing the tubes is the shape of a telescope, each ring being inside of the one next back of it. With a straight boiler the successive rings of the shell are alternately inside and outside, so that the ring next to the smoke

For notice of copyright, see page immediately following the title page.

arch is the same size as the one next to the throat sheet, and is connected directly to the main shell *M* of the firebox; the other end has fastened to it the smokebox *S* and extension front *E*. *A* is the firebox, which is surrounded with water on the four sides and on the top. The firebox and the boiler sheets are riveted at the bottom to the mud-ring *m*, which forms the bottom of the water legs *l*, *l*. *D* is the dome of the boiler; *d*, the firebox door. The flat ends of the stays *e* are riveted to the outer shell of the boiler; the rivets are not shown here. The crown bars are connected to the outer shell by means of the sling stays shown in the figure.

4. Belpaire Boiler.—A **Belpaire** boiler with extension front *E* is shown in Fig. 2. This construction was adopted to have the crown sheet and top of the shell parallel, and thus have the stay bolts at right angles to the sheets. It also adds considerable steam space to the boiler. In this type, both the crown sheet *C* and the main shell *M* are made flat, as shown in (*b*). These two sheets are stayed by means of the stays *r*, which are at right angles to both sheets, while the sides, which are also flat, are stayed with rods *t*. Gusset stays *g* support the back boiler head *B*, while the front tube-sheet *F* is supported by the stayrods *e*. In this boiler, as in the straight-top boiler, *D* is the dome; *d*, the firebox door; *A*, the firebox; *l*, *l*, the water legs; *S*, the smokebox; and *W*, the barrel, or waist, of the boiler. The same letters will be used to designate these parts in the various types of boilers, regardless of differences of construction.

5. Wagon-Top Boiler.—This type of boiler, shown in Fig. 3, has the shell over the crown sheet much higher than the cylindrical part of the boiler. This larger part tapers off, as shown, to its junction with the shell ahead of the throat sheet. The dome is located over the firebox, which requires that the crown sheet be supported by crown bars.

6. Extended Wagon-Top Boiler.—A boiler of this type is shown in Fig. 4, (*a*) being a longitudinal section and (*b*) a cross-section and back-end view of the firebox. The

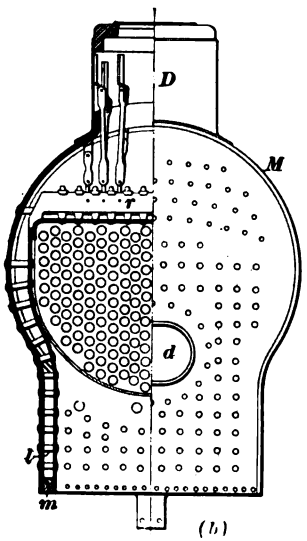

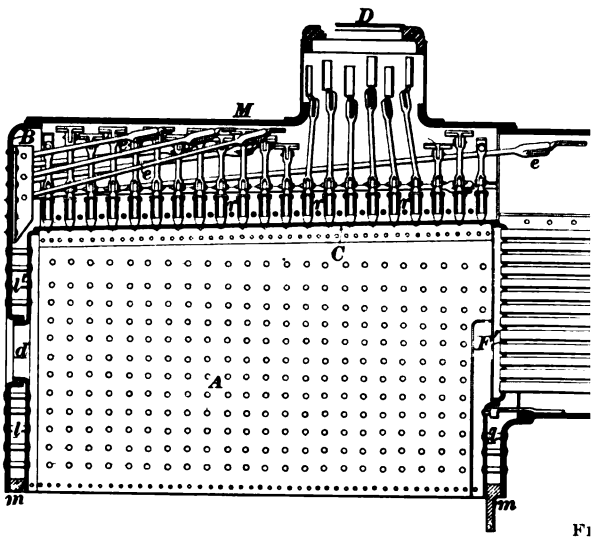

Fi

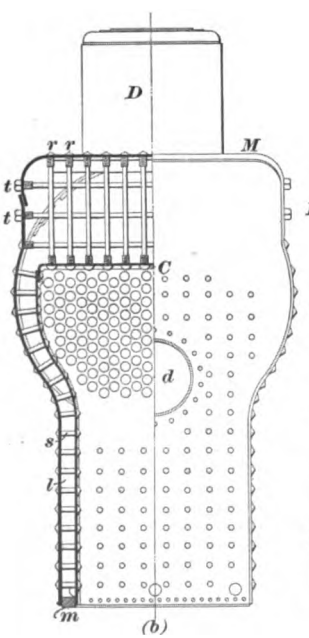

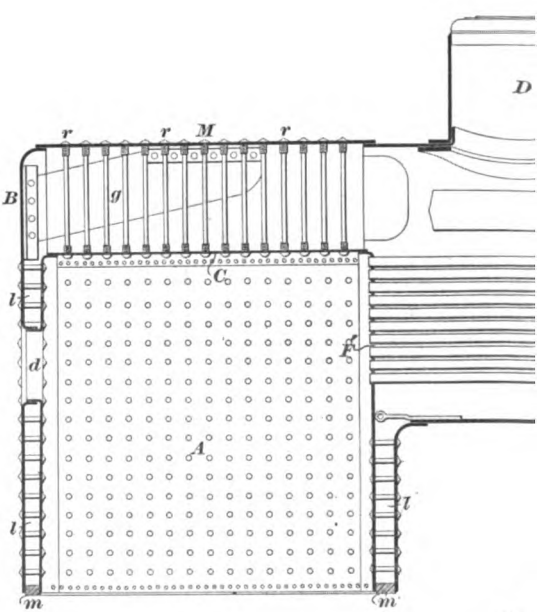

FIG

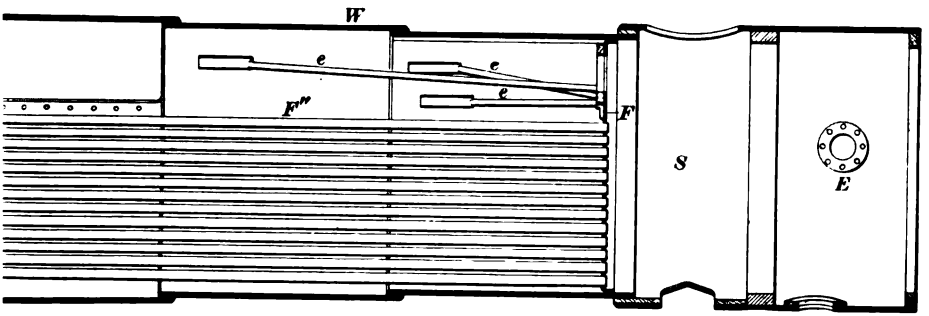

(a)

. 1.

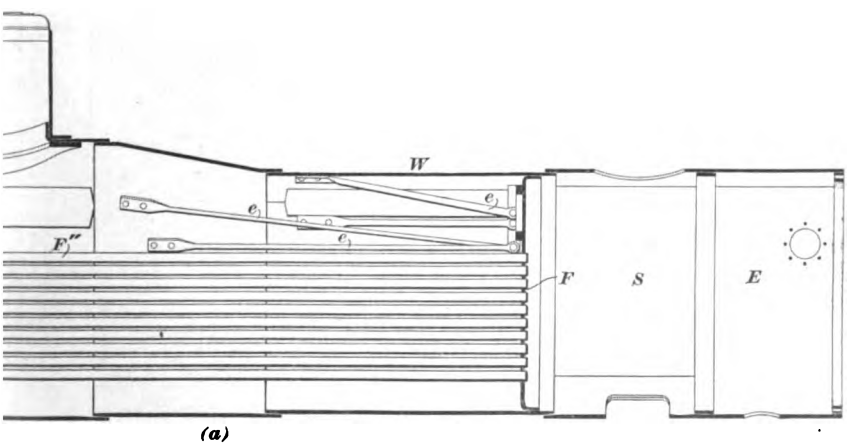

(a)

2.

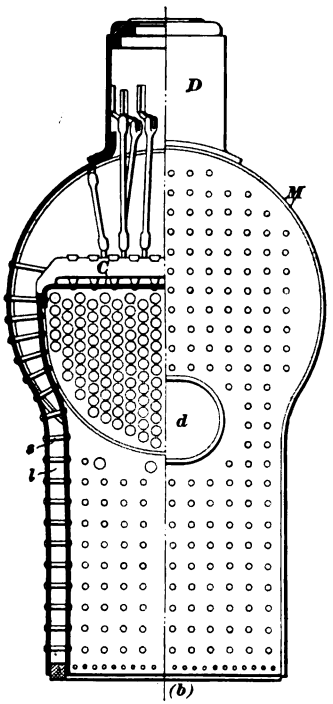
D
M
C
d
s
l
(b)

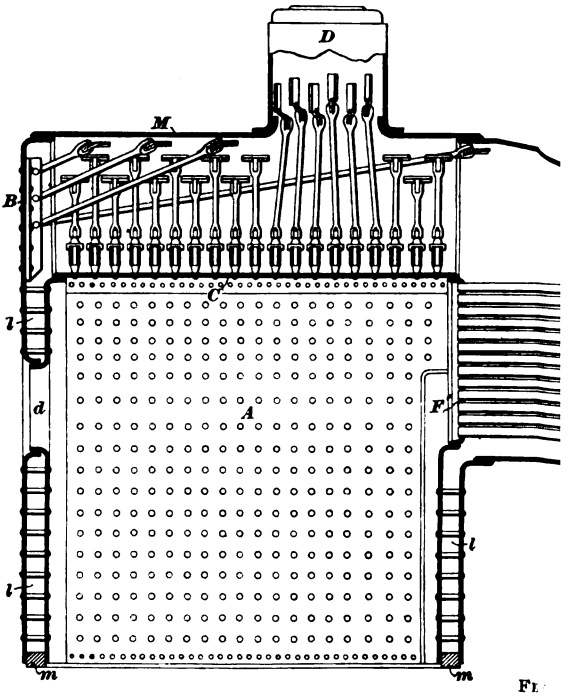
D
M
B
C
l
d
A
F
l
l
m
m

FI

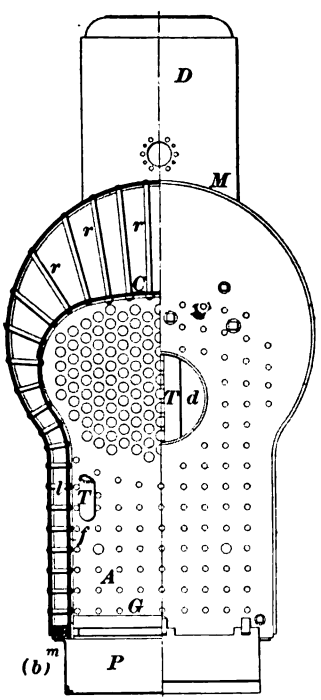
D
M
r
r
r
C
T
d
l
T
A
G
(b)
m
P

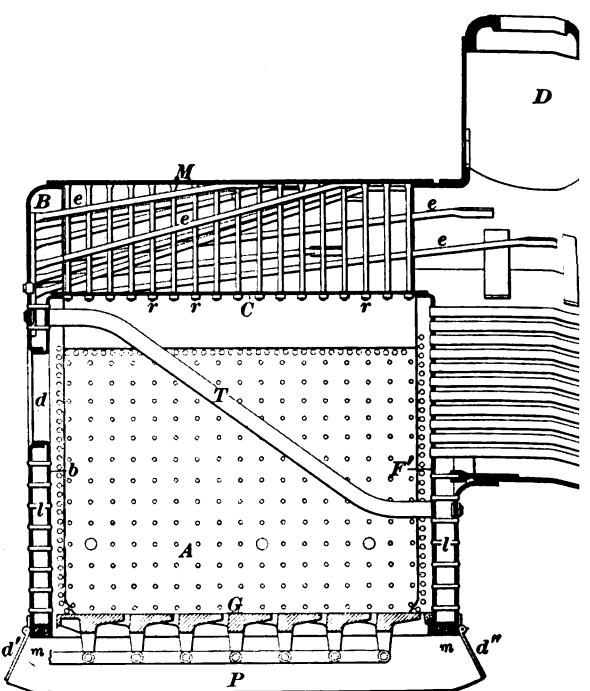
D
M
B
e
e
e
e
r
r
C
r
d
T
b
F
l
l
A
G
d'
m
m
d''
P

FIG. 4

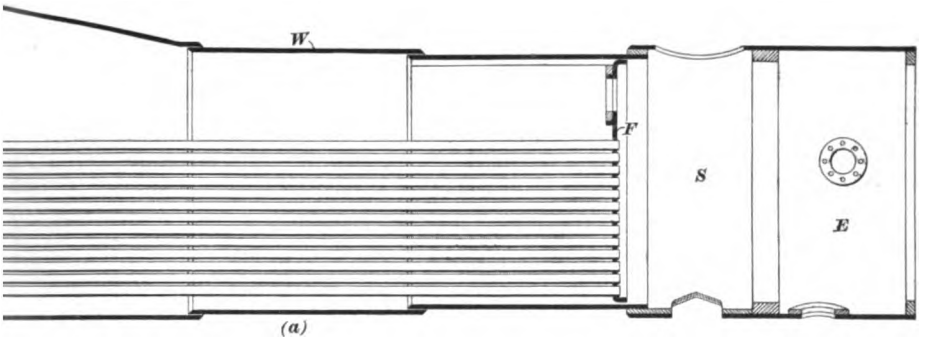

G. 3.

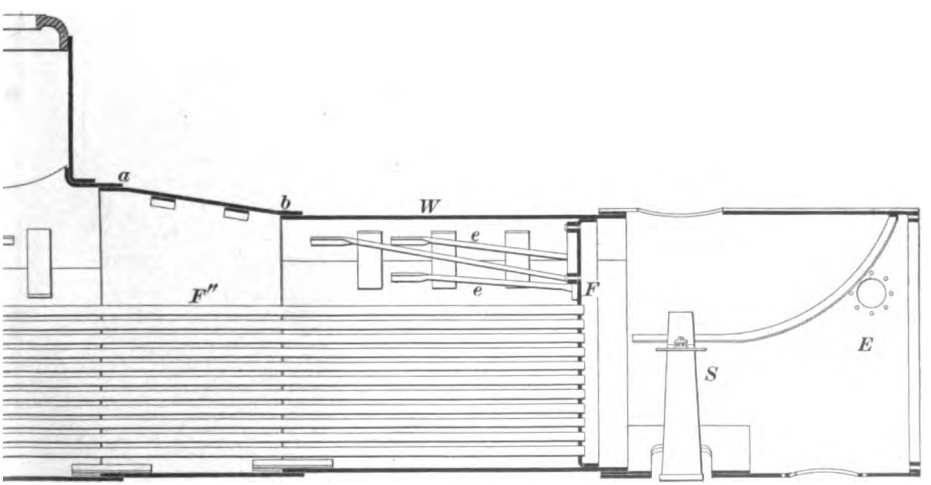

(a)

G. 4.

crown sheet *C* is supported by the **radial stays** *r*, and the back boiler head *B* and the front tube-sheet *F* by the stayrods *e*. The tubes *T* support the firebrick arch and add to the heating surface, as well as giving better circulation of water into the legs of the boiler. As seen in the illustration, this type of boiler has the main shell *M* elevated above the waist or cylindrical part *W*, to which it is connected by means of the slope sheet *a b*. The object of this construction is to increase the steam space and provide space ahead of the crown sheet for the dome.

7. The Wide-Firebox Boiler.—In addition to the foregoing four types of boilers, there is another, called the **wide-firebox** boiler. This is similar to the Wootten boiler, from which it differs chiefly in having no brick bridge extending across the front end of the firebox and no combustion chamber.

This type is used in and around anthracite coal-mining regions, being adapted for burning fine hard coal, and culm, the refuse from the mines. It is illustrated in Fig. 5, (*a*) being a longitudinal section through the boiler and (*b*) a cross-section and back-end view of the firebox.

The firebox is made as long as practicable, its length being limited by the distance a fireman can shovel coal with accuracy. It is made comparatively shallow, as it is placed above the frames, and must extend over the rear driving axle. It is made much wider than the ordinary firebox, being from 8 to 9 feet wide. This construction gives a much larger grate area than usual, so as to permit a slower rate of combustion. It is especially important that the draft through the fire shall be light, as otherwise the small fuel used will be drawn into the tubes without being burned. On account of the great width of the firebox, it is necessary to have either two fire-doors or one that opens wide and has two doors.

This type of boiler has been very successful as an anthracite-culm and fine-coal burner, and a great number are now in use on different roads. They have not been very successful as bituminous-coal burners; the grates are so close to the crown sheet that there is an insufficient volume above the fire for

proper combustion; also on account of the extensive and frequent firebox repairs necessary when soft coal is used. However, a mixture of 1 part of soft coal to 4 parts of fine hard coal is now being used on a number of roads with good results.

CONSTRUCTION OF BOILERS.

8. The principal parts of a locomotive boiler (see Figs. 1 to 5) are: the firebox A; the smokebox S; the tubes F'', which extend through the cylindrical part (the barrel or waist) of the boiler and connect the firebox with the smokebox; and the shell of the boiler. The latter consists of the main shell M and the waist W.

THE FIREBOX.

9. General Description.—The locomotive firebox, as in Fig. 4, consists of the back sheet b, two side sheets f, the back tube-sheet F' forming its front, the crown sheet C on top, and the grates G at the bottom. The sheets of the firebox are usually of steel, although copper sheets have occasionally been used.

Between the frames, the firebox is rectangular in form, while, above them, the side sheets conform more or less to the shape of the boiler shell. It varies from 32 to 42 inches in width, and from 70 to 120 inches in length, according to the type and size of engine. In wide-firebox engines, the box is from 8 to 9 feet wide and 10 to 11 feet long. The sheets of the firebox are surrounded with water, being separated on all sides from the main shell by a space l, called the **water leg**, this space ranging from 3 to $4\frac{1}{2}$ inches. The bottom of the water leg is formed by a wrought-iron ring m, called the mud-ring, to which the sheets are riveted, the rivets passing through both sheets and the ring and being headed over on the outside. Below the grate bars G, which form the bottom of the firebox, is the ash-pan P; this is furnished with two dampers, d' and d'' for regulating the admission of air through the grates to the firebox.

10. Water Legs.—These, marked l, l in Figs. 1 to 5, are part of the water space of the boiler and, consequently, are

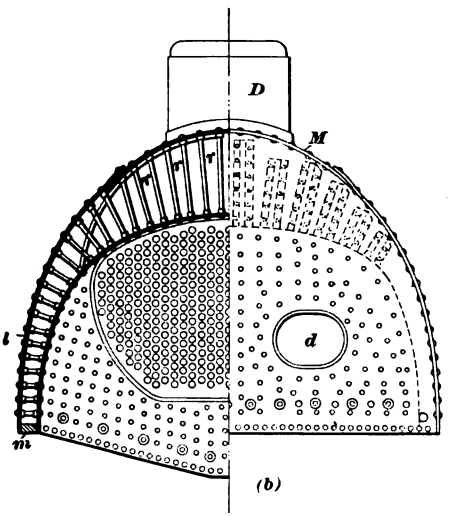

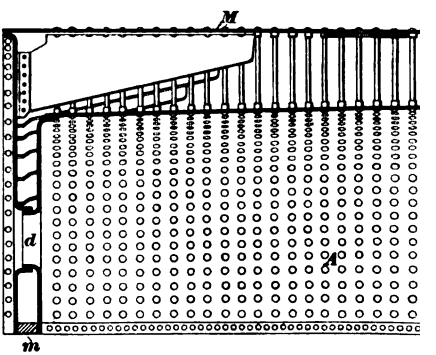

FIG. 5.

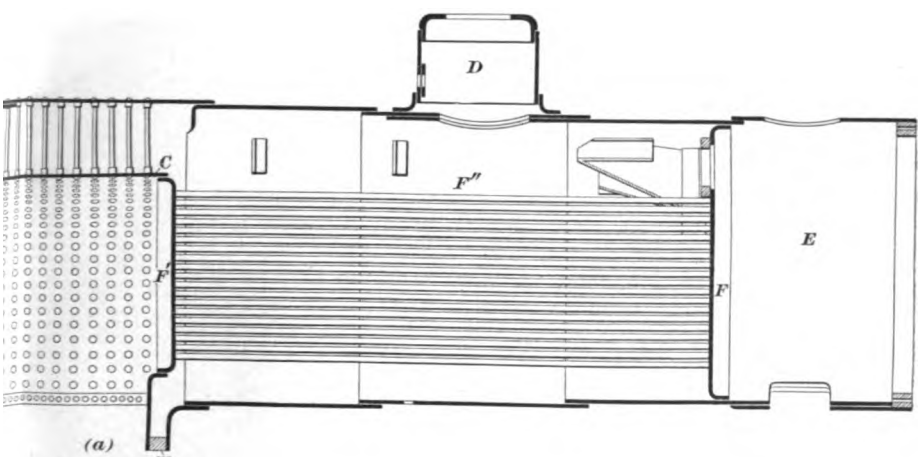

5.

subjected to a pressure equal to that of the steam plus that due to the **head of water** in the boiler. The legs, therefore, are subjected to a slightly greater internal pressure than any other part of the boiler. This pressure tends to force the sides and end sheets of the firebox inwards and those of the outer shell outwards, while the tendency of the pressure above the crown sheet is to bulge it downwards. Sudden expansion and contraction of the firebox sheets also subjects them to severe strains, and, for this reason, the temperature of the firebox should never be allowed to vary suddenly.

11. Staybolts.—To enable the firebox sheets to withstand the strains to which they are subjected, they are fastened to the main shell by means of staybolts *s*, Fig. 2 (*b*). These are

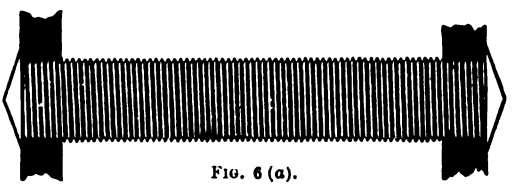

FIG. 6 (*a*).

generally made of wrought iron, $\frac{7}{8}$ to 1 inch in diameter, and spaced from 4 to $4\frac{1}{2}$ inches apart. In some cases, they are threaded their whole length, as in Fig. 6 (*a*). They are screwed right through the outer and inner sheets, and the ends cold-riveted. The rule is to space the staybolts at such distances

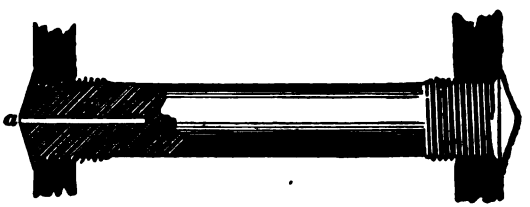

FIG. 6 (*b*).

apart that the greatest stress to which they will be subjected is not more than 6,000 pounds per square inch of cross-section. Staybolts very frequently break, owing to unequal expansion and contraction of the plates, and bulged or crooked sheets are liable to result if the broken staybolts are not discovered and replaced. Broken staybolts are generally detected by the

hammer test (i. e., sounding with a hammer), but it is sometimes very difficult to discover the partially broken ones by this means, and, as they are usually in excess of the broken ones, they form a constant and unsuspected source of danger. If a small hole, say $\frac{1}{8}$ inch in diameter, is drilled about 1 inch into the outer end of the staybolts, any broken or partially broken ones will be indicated at once by water escaping through the hole; staybolts, as a rule, break pretty close to the outer sheet. Such a staybolt is shown in Fig. 6 (*b*), which, besides being drilled at *a*, has the threads turned off the central portion, this procedure being found to increase its durability. Sometimes hollow staybolts are used to supply air direct to the firebox, a couple of rows being placed just above the fire.

METHODS OF STAYING CROWN SHEETS.

12. Crown-Bar Method.—The crown sheet is supported in one of two ways: (1) by *crown bars*, or (2) by *radial stays*.

Crown bars are iron girders, the ends *e* of which are shaped so as to form feet; they are placed across the firebox with the

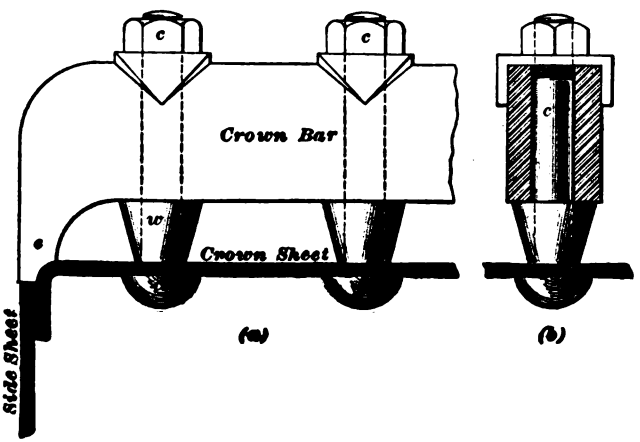

FIG. 7.

feet resting upon the edges of the side sheets, as shown in Fig. 7 (*a*). The bar is so designed as to clear the crown sheet a couple of inches or so.

Crown bars are generally made up of two pieces of plate bolted together, as shown in the cross-sectional view, Fig. 7 (*b*), with sufficient space between them to allow the crown bolts to pass through. Washers *w* for holding the crown sheet in position are placed between the crown bar and the crown sheet, and the whole is then tightened up and held together by the crown bolts *c*, which pass up through the crown sheet, washer, and crown bar, and are fastened on top of the latter by nuts. The crown sheet is thus supported by the bars, which in turn are connected to the shell of the boiler and the inside of the dome by means of sling stays, as shown in Fig. 1. The bars are placed about $4\frac{1}{2}$ inches from center to center. The bolts are generally $\frac{7}{8}$ or 1 inch in diameter, and are spaced about $4\frac{1}{2}$ inches between centers.

The objections to the crown-bar method of staying are: (1) increased difficulty of cleaning the crown sheet; (2) great weight and cost; and (3) loss of water space taken up by them. When the water is bad, scale forms around the washers *w*, and keeps the water away from these spots, thus tending to overheat the crown sheet beneath the washers. These washers are made tapering, as shown, so as to allow the water to reach a greater portion of the sheet.

13. Radial-Stay Method.—In this method of staying, the crown sheet is supported from the main shell by means of staybolts screwed through both shell and crown sheet and riveted cold. A staybolt to be most effective must be placed at right angles to the surface it is to support; the staybolts supporting the outer shell and the crown sheet, therefore, should be at right angles to both sheets, but, as the shell is circular, while the crown sheet is more or less flat, this is impossible. The best that can be done is to give the crown sheet a considerable curvature, and place the staybolts as nearly at right angles to both sheets as possible; they are thus set more or less radial to the outer shell—hence the term **radial.**

Curving the crown sheet has another advantage: As the impurities in the water are precipitated on the crown sheet, they are washed off by the strong circulation and swash of the water

in the boiler, thus keeping the crown sheet comparatively clean. This construction, therefore, is well adapted for use with muddy water; it is cheaper than the crown-bar method, and provides a much better chance to wash out the mud and scale, and to inspect the boiler.

The radial staybolts are spaced about $4\frac{1}{2}$ inches between centers on the crown sheet, which, of course, makes the space greater in the outer shell. When radial stays are used, it is necessary to set the dome forwards on the cylindrical portion of the boiler, as otherwise the stays would have to go up into the dome.

GRATES.

14. Rocking Grate.—Fig. 8 shows the *fire-grate* and *ash-pan* of an ordinary **rocking grate** used in soft-coal engines. The upper view is a cross-section through the firebox,

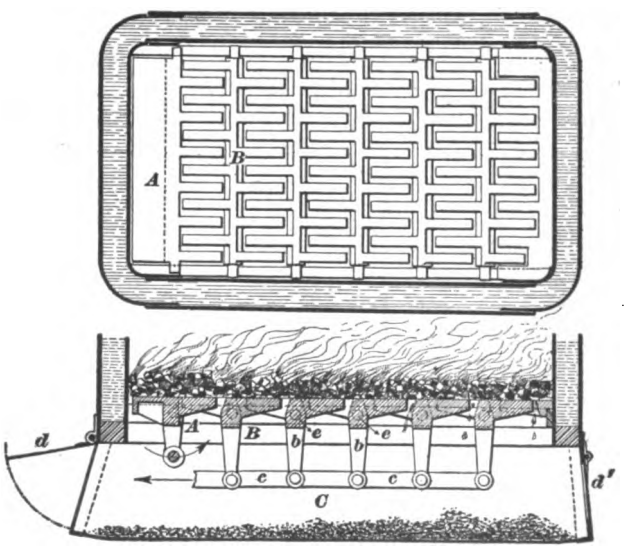

FIG. 8.

showing a top view of the grates; the lower view is a longitudinal section through the firebox, grate, and ash-pan.

The grate consists of cast-iron cross-bars *A*, *B* supported on trunnions *e*, on which they can rotate. Each bar is provided

with fingers that fit in between the fingers of the adjacent bars, and they are further provided at one end with an arm *b* (on the under side) that connects with the bar *c*. This bar can be moved to and fro by means of a lever (not shown in the figure), the handle of which is in the cab. This movement gives the grate bars a rocking motion on their trunnions that tends to break up clinkers and shake them and the ashes into the ash-pan *C*. The doors *d*, *d'* of the ash-pan not only provide means for removing the ashes, but act also as dampers for regulating the draft. They are operated from the cab. It will be noticed that there is considerable space (about 35 per cent. of the grate area) between the fingers of the grate bars. This is to allow the easy entrance of air into the firebox. Another type of grate, which consists of a flat wide bar with air holes through it, is used considerably. It can be rocked or shaken the same as finger grates.

15. Water Grates.—When hard coal is used, such an intense heat is generated that ordinary grate bars soon burn

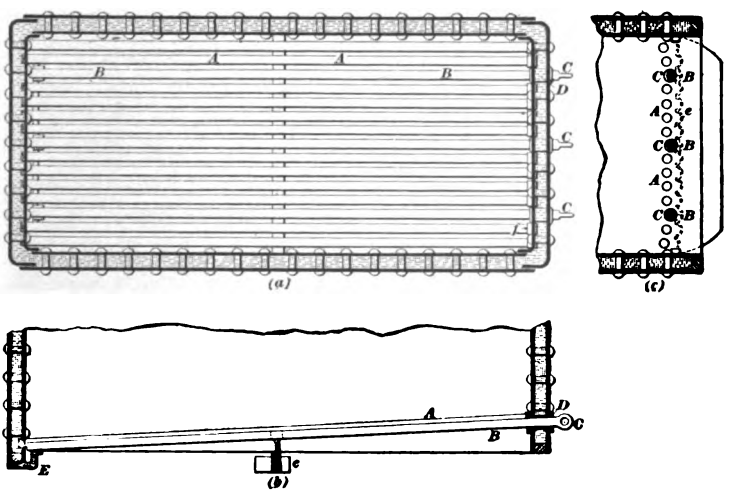

FIG. 9.

out; therefore, what are known as **water grates** are very generally used. Such a grate is shown in Fig. 9: (*a*) is a plan of the grates; (*b*) is a side view, showing the support *E* for the

solid bars *B* and the middle support *e* for the grate; (*c*) is an end view, showing the arrangement of the grate bars. The grate bars *A* are usually made of 2-inch wrought-iron tubes about ¼ inch thick, and have water circulating through them. They are set parallel to the length of the engine, with their front ends lower than their back ends, which assures a free circulation of water through them (unless they choke up) that prevents their being burned.

The tubes are threaded on the end that is screwed into the back tube-sheet; the other end is fastened into the back sheet of the firebox by means of a tapered copper ferrule *f*, which is driven into the hole in this sheet until it makes a tight joint between the tube and the sheet.

Solid bars *B*, which are removable, are placed at regular intervals, to provide for drawing the fire from the firebox. These solid bars pass through short pieces of tube *D*, set in the back end of the firebox, the front ends of the bars resting upon the support *E*. They are provided with an eye *C* at one end, for convenience in pulling them out when the fire is to be drawn.

The area of the grates in a hard-coal burning engine is much larger than in a soft-coal burner. One pound of hard coal will produce about the same quantity of heat, in burning, as 1 pound of soft coal; but, as the hard coal burns much more slowly than the soft coal, it will not generate as high a temperature, and consequently will not make steam as fast. In order to make steam at the same rate, a greater quantity of hard coal must be burning at the same time, and the most practical way to do this is to increase the size of the firebox and the area of the grates.

THE FIREBRICK ARCH.

16. It is becoming an almost universal practice to use a **brick arch** in the firebox of all types of engines. Brick arches are usually, as the name implies, made in the form of an arch, and are supported by lugs or pins bolted to, or screwed into, the side sheets. Sometimes the bricks are supported by arch pipes *T*, Fig. 4, which are fastened into the tube-sheet and

back sheet in such a way as to permit of a circulation of water through them. Usually, a space of from 3 to 6 inches is left between the bottom row of bricks and the tube-sheet, but in some cases the brick is up against the sheet. The bottom of the arch is from 1 to 10 inches below the lower tubes, depending on the depth of the firebox, and about 20 inches above the grates. An opening is left at the back end of the arch, below the crown sheet, to allow the gases to pass through to the tubes.

The advantages of using a brick arch are: (1) By lengthening the path of the gases to the tubes, they are retained for a greater interval of time in the firebox, and therefore have more time in which to mix with the air and burn. (2) The firebrick become intensely hot and tend to maintain a more even temperature, besides helping to prevent the gases being cooled below their igniting temperature. (3) It maintains a more even temperature in the tubes, preventing, to a great extent, unequal expansion and contraction, thereby increasing the life of the tubes. (4) When an arch is used, it is more difficult for the exhaust to pull fine coal and cinders through the tubes unburned and to tear holes in the fire. The brick arch therefore aids combustion, helps to prevent black smoke, increases the life of the tubes, and effects a saving in the coal comsumption. Arches are not used with hard-coal burners.

THE TUBES.

17. The **tubes** of a locomotive boiler are usually made from strips of sheet iron, lap-welded together, although sometimes they are solid-drawn from steel. Steel tubes can be made thinner than iron tubes while giving equal strength, and for this reason are advantageous, since the thinner the tubes, the more readily the heat of the gases will be conducted to the water.

The tubes are generally 2 inches external diameter. In some cases, however, they are made as small as $1\frac{3}{4}$ inches, and in others as large as $2\frac{1}{4}$ to $2\frac{1}{2}$ inches. A 2-inch tube, .11 inch thick, has an internal diameter of 1.78 inches; a $2\frac{1}{4}$-inch tube, .125 inch thick, has a 2-inch internal diameter; while a $2\frac{1}{2}$-inch tube, .125 inch thick, has a $2\frac{1}{4}$-inch internal diameter.

By reducing the outside diameter of the tubes below 2 inches, more of them can be got in and so increase the total tube heating surface, but at the same time the tendency of the tubes to become stopped up is increased. Increasing the diameter of the tubes decreases the total tube heating surface, and reduces the steam capacity of the boiler. The smaller tubes have other advantages over the large tubes, for the hot gases are broken into smaller columns in passing through the smaller tubes; thus, less heat is wasted, and the gases pass out at the stack at a reduced temperature. A small tube has a greater heating surface in proportion to the volume of gases passing through it than a large tube.

The total cross-sectional area of the tubes in the larger sizes of engines is about $\frac{1}{8}$ the grate area for bituminous coal, and $\frac{1}{10}$ for large anthracite, and still less (sometimes as little as $\frac{1}{20}$) for small anthracite and culm.

The tubes are connected to the front tube-sheet in the smoke-box, and to the back tube-sheet in the firebox. Their function is to carry the smoke and gases of combustion from the firebox to the smokebox, breaking them into small columns, so that their heat may be more readily extracted by the water that surrounds the tubes. The tubes serve another purpose, also, in acting as stays for the tube-sheets.

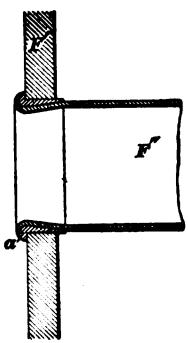

FIG. 10.

Fig. 10 illustrates one way in which the tubes are attached to the back tube-sheet; a is a copper ferrule, tapered on the inside from $\frac{1}{8}$ inch thick at one end to almost nothing at the other end. It is about $\frac{1}{4}$ inch longer than the thickness of tube-sheet F'. This ferrule is used to avoid leakage due to the expansion and contraction of the tubes and sheet.

The holes in the tube-sheet are drilled $\frac{1}{16}$ inch larger than the diameter of the tubes; the tube is then inserted in the hole and permitted to extend a little beyond the sheet; the furrule is next put in place, and the end of the tube expanded and, in most cases, beaded as shown. The copper ferrule is not used in

the front tube-sheet; the holes are drilled $\frac{1}{32}$ inch larger than the diameter of the tube, which is then inserted and expanded as described.

The tubes should be so arranged that there will be a space of from $\frac{5}{8}$ to $\frac{7}{8}$ inch between each adjacent pair. They should be so grouped as to permit the freest circulation of

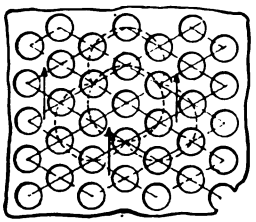

FIG. 11.

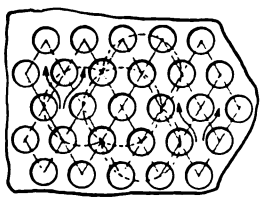

FIG. 12.

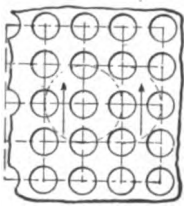

FIG. 13.

the water and steam. Three methods of grouping are shown in Figs. 11, 12, and 13, in which the arrows show the course the steam and water can take in ascending. In Figs. 11 and 13, the steam and water can rise in a straight line, and either of these constructions will give a better circulation than will that shown in Fig. 12. As the grouping in Fig. 11 permits the use of more tubes to a given area of tube-sheet than does that of Fig. 13, it is the one most commonly used.

HEATING SURFACE.

18. Definition of the Term.—The term **heating surface** is meant to include all surfaces in the boiler and firebox that are exposed on the one side to the heat of the fire or of the generated gases, and that have water on the other side. The total heating surface in a locomotive boiler, therefore, comprises the tubes, crown sheet, back tube-sheet, and side and back sheets of the firebox. The area of the front tube-sheet is not taken into consideration in these calculations. Of these surfaces, the crown sheet is the most effective; the tube-sheet, sides, and back of firebox next; after which comes the tube surface. The tube surface is not equally effective throughout; the back end of the tube is more effective than the front end, and the top of the tube is more effective than the sides or bottom, the bottom, in fact, being considered as of but little value.

In calculating the heating surface of a locomotive boiler, however, the efficiency of the different parts is not taken into account, the whole surface being considered as equally efficient.

The heating surface of the firebox is called the **direct heating surface**, since it is subjected to the direct action of the fire, while that portion comprising the inside surface of the tubes and the surface of the front tube-sheet is called the **indirect heating surface.** The **total heating surface** is composed of the sum of the direct and of the indirect heating surfaces.

19. Amount of Heating Surface.—In designing a boiler, it is customary to allow a certain amount of total heating surface for each cubic foot of piston displacement. As the result of many experiments, it has been ascertained that the number of square feet of heating surface should be from 360 to 420 times the piston displacement in cubic feet, counting only one piston.

These figures depend on the class and size of the engine, the diameter of drivers, etc., but chiefly on the kind of fuel to be used. The piston displacement in cubic feet is equal to the area of the piston, in square feet, multiplied by the length of the stroke, in feet. When the size of the cylinder is given, the total heating surface may be calculated by the following rule:

Rule 1.—*To find the total heating surface to be allowed an engine, multiply the diameter of the piston, in inches, by itself, and by the stroke, in inches. Then multiply this product by .190 if bituminous coal is to be used, by .165 for lump anthracite, or by .200 for small anthracite, buckwheat or pea.*

EXAMPLE.—What total heating surface should be allowed a bituminous coal-burning locomotive that is to have 18″ × 24″ cylinders?

SOLUTION.—From rule **1**, heating surface = 18 × 18 × 24 × .190 = 1,477½ sq. ft. nearly. Ans.

The ability of a locomotive to handle heavy trains or to make fast time, depends on its steam-making capacity. For this purpose, a liberal amount of heating surface must be used, and modern engines have so much more heating surface than those

of older date that the proportion of heating surface to the cylinder dimensions, shown in rule 1 as .190, is now from .210 for freight, to .240 for passenger service, for bituminous coal, and other kinds of coal in proportion.

The *direct* heating surface is generally made from 4½ to 6 times the grate area; that is, for every square foot of grate area, there is from 4½ to 6 square feet of direct heating surface. In culm burners, the proportions are from 2 to 2½ times the grate area.

The *indirect* heating surface, generally, is about 11 times the direct; that is, for every square foot of direct heating surface there is 11 square feet of indirect heating surface.

Striking a rough average for all coals, we may say that for each square foot of grate surface there is about 5½ square feet of direct heating surface and about 60 square feet of indirect heating surface. In culm burners, the proportions are less.

GRATE AREA.

20. In order to have a continuous supply of steam sufficient for running at high speeds, the evaporation must be rapid and the direct heating surface should not fall below a certain amount, depending on the grate surface. The **grate area** may be determined with reference to the piston displacement. When the fuel is lump anthracite, allow a grate area of 9 square feet for every cubic foot of piston displacement; for small anthracite, allow 19 square feet; and for bituminous, 7 square feet. If the dimensions of the cylinder are known, the following rule may be used:

Rule 2.—*To find the grate area, multiply the diameter of piston, in inches, by itself and by length of stroke, in inches; then divide the product by 320 for bituminous-coal burners, by 240 for lump-anthracite burners, and by 115 for small-anthracite burners.*

EXAMPLE.—An engine is to have 18″ × 24″ cylinders, and is to burn lump anthracite; what grate area should it have?

SOLUTION.—According to rule 2,

$$\text{grate area} = \frac{18 \times 18 \times 24}{240} = 32.4 \text{ sq. ft.} \quad \text{Ans.}$$

The proportion of grate area is being increased in modern locomotive boilers, so that the amount of grate area in relation to cylinder dimensions, shown as 320 for bituminous-coal burners, ranges from 340 for freight to 420 for passenger service, with other kinds of coal in proportion.

The **rate of combustion** in a locomotive boiler is higher than in any other class. At times it is as high as 200 pounds of coal per square foot of grate area per hour, while the rate for stationary boilers only ranges from 15 to 25 pounds per square foot of grate area per hour. The rate of combustion should not exceed 100 pounds of coal per square foot of grate area per hour, if fuel economy is to be considered, and for this reason the grate should be as large as possible, so that a large body of coal can be burning at one time.

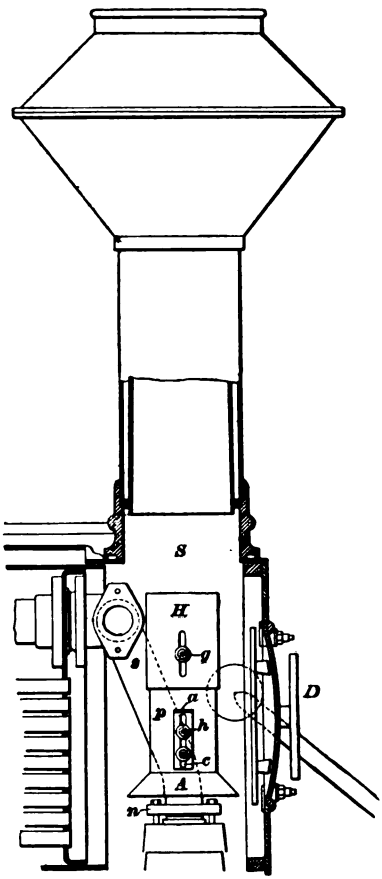

FIG. 14.

THE SMOKEBOX.

SHORT SMOKEBOX.

21. In the *diamond-stack* engines, so universally used some years ago, and which are still used today on some roads, the boiler shell has a separate ring attached at its front end, which extends a short distance beyond the front sheet and forms what is known as the **smokebox.**

The length of the smokebox *S*, Fig. 14, is such as to provide sufficient room for the steam pipes *s*, exhaust pipe *n*, and petticoat pipe *p*. The exhaust pipe is placed directly above the exhaust cavities in the cylinder saddles, and is of short length, as shown. The diamond stack, containing the spark-arresting devices, is so placed that its center is directly above the center of the exhaust nozzles.

Above the exhaust pipe is the petticoat pipe *p*, through which the exhaust steam and products of combustion pass to the smokestack. It is held in position by the braces *a*, one on each side, which are fastened to the shell of the smokebox. The braces have a slot *c* through which pass bolts *h* of the petticoat pipe, securing the two together, the slots permitting of a certain amount of adjustment of the pipe. The pipe is of smaller diameter than the stack, and is turned outwardly at the bottom, as shown at *A*. The upper end *H* is made to telescope, and is provided with slots in its sides through which bolts *g* pass; by means of these slots and bolts, the length of the petticoat pipe may be altered as necessary to regulate the draft through the tubes. The door *D* must be air-tight, for if air were allowed to enter the smokebox, it would partly destroy the action of the exhaust in making a vacuum.

EXTENSION FRONT.

22. In the **extended front end,** Figs. 15 (*a*) and (*b*), the smokebox *S* is extended much farther than with a diamond stack, the part *E* affording room for the netting *N*. The steam pipes *s*, exhaust pipe *n*, and deflector plate *c* are placed in the smokebox proper, while the netting, or screen, *N* is in the extension *E*. There is an opening *q* in one side of the smokebox to afford a means of examination. This opening and also the door *D* are made air-tight for reasons already stated. Some extensions are equipped with a cinder trap *A* for removing the cinders from the front. This is generally made of cast iron and is constructed so as to be air-tight. These cinder traps are going out of use and the deflector plate is being so arranged that the cinders do not remain in the front end, but are carried out of the stack.

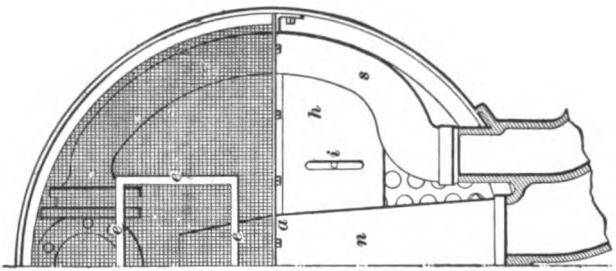

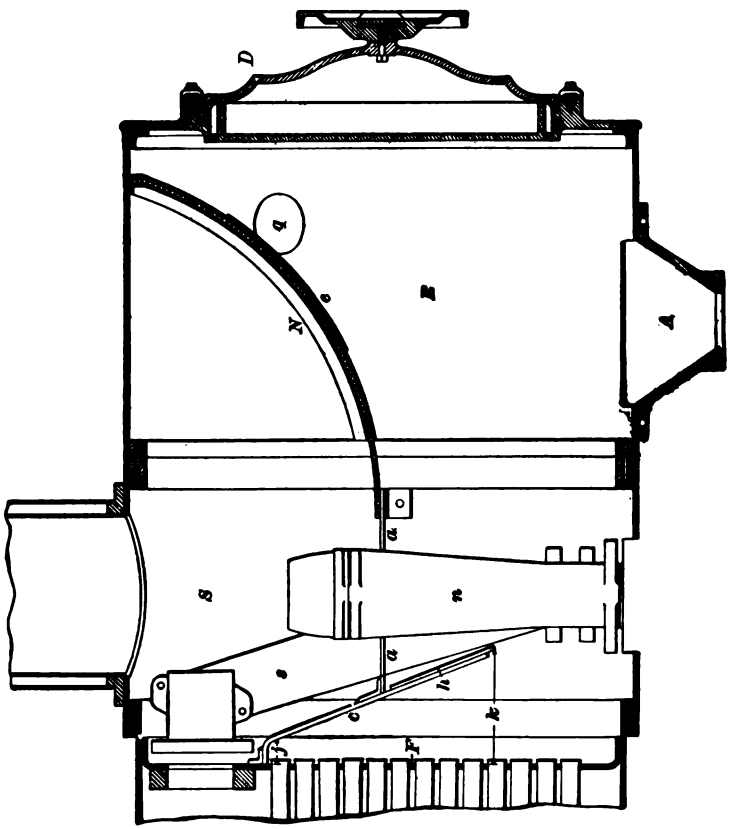

FIG. 15 (a).

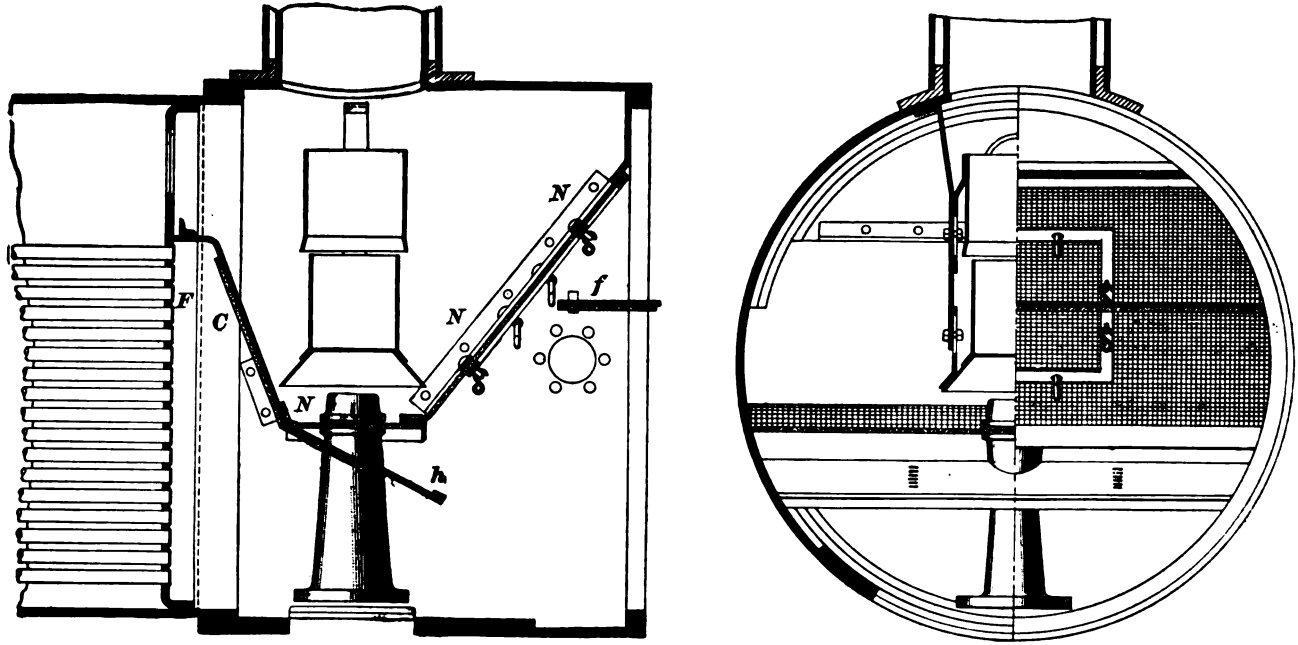

FIG. 15 (*b*).

23. A later style of extension front-end arrangement is shown in Fig. 15 (*b*). In this the deflector plate *c* is attached to the flue sheet *F* above the top row of flues and extends down and forwards at an angle to the level of the top of the exhaust pipe, where it joins a horizontal piece of netting *N*. The netting also is continued at an angle up to the top and front end of the extension.

The lower end of the deflector, which passes the exhaust pipe (and steam pipes) at an angle, as shown, has a movable apron *h* which can be adjusted to clean the front end. Across the front end, and a little above the middle, is another deflector *a*. Some deflectors are solid, while others are made of netting, which acts to break up the cinders, so that there is less danger of fire when the cinders reach the atmosphere.

The exhaust nozzle is 6 inches to 8 inches below the center line of the boiler. A petticoat pipe, similar to those in a diamond-stack smokebox, comes above the exhaust nozzle and directs the exhaust steam centrally up the stack. In other particulars this arrangement is similar to the one previously described.

DRAFT APPLIANCES.

THE PETTICOAT PIPE.

24. The function of the **petticoat pipe**, used in the short smokebox, is to equalize the draft through the tubes, so that it will be the same in the top and bottom rows as in the center tubes. This is accomplished by altering the position or length of the pipe, Fig. 14, until the draft is properly regulated. The exact position to give the best results can only be determined by experiment, as it may not be the same for any two engines. If the fire burns quickest and brightest in the front end of the firebox, it indicates that the lower tubes have the greater draft, and consequently the telescope end *H* of the petticoat pipe should be lowered sufficiently to adjust the draft. If the fire burns brightest at the back end of the firebox, it indicates that the draft is greater through the upper tubes, and the end *H* should be raised sufficiently to regulate the draft. When the

proper adjustment is attained, the fire will burn evenly at all parts of the firebox, the engine will steam better, and the tubes will all appear equally clean when examined. A slight alteration from this adjustment may very materially affect the steaming qualities of the engine and the quantity of coal consumed; consequently, care should be exercised in keeping the petticoat pipe in proper adjustment and in exact line with the barrel of the stack.

THE DEFLECTOR PLATE.

25. The **deflector plate** *c*, Fig. 15 (*a*), is connected to the front tube-sheet *F* just above the top row of tubes; it extends downwards at an angle with the tube-sheet, as shown. The lower part *h* is made adjustable, elongated bolt holes in *h* permitting it to be lowered about 6 inches below the bottom of the stationary plate *c*, if necessary. It is secured in position by means of bolts *i*, view (*b*). The distance *j* between the deflector plate and the tube-sheet at the top is generally about 3 inches; while the distance *k*, when the deflector plate is in its lowest position, is such that it will give an area at least equal to the total cross-sectional tube area. If less than this, the flow of the gases will be obstructed and the engine will steam hard.

The deflector plate serves two purposes: (1) it deflects the gases and cinders downwards, causing the cinders to be deposited in *E*, while the gases escape through the netting *N*; and (2) it equalizes the draft through the tubes. The tendency of the high exhaust pipe *n* is to create a greater draft through the upper tubes than through the lower ones, and the deflector plate overcomes this tendency by lengthening the path of the gases that flow through the upper tubes. The air entering through the grates at the front end of the firebox passes through the lower tubes; that entering through grates near the fire-door rises and passes through the upper tubes. If the fire near the back end of the firebox indicates that the draft through the upper tubes is too great, the apron *h* of the deflector plate should be lowered to equalize it; if the draft through the lower tubes is too great, then the apron *h* should be raised sufficiently to equalize the draft and make the fire burn evenly. If the fire does not burn

freely, and the inside of the fire-door becomes covered with soot, it indicates a choked draft. This may be due to a number of tubes being stopped up, or to the deflector plate being too low.

A horizontal plate *a* is fastented to the stationary part *c* of the deflector plate and the shell of the smoke arch; its function is to prevent cinders and sparks passing up alongside the exhaust pipe and out of the stack. The netting *N* is bolted to the front end of this plate, and extends to the top of the extension, as shown. It is provided with a door *e*, so as to permit of examination or repairs to the exhaust or steam pipes without removing the netting.

With the extended smokebox, the netting is placed in the front end, below the top of the exhaust nozzle; thus, the exhaust steam is given a free path to the atmosphere, and the netting does not clog up as badly with waste oil from the cylinders as it does when it is in the diamond stack above the nozzle. The netting should be examined frequently to see if it has become clogged, or if there are any holes worn in it.

THE SMOKESTACK.

26. Functions of the Stack.—Locomotive **smokestacks** differ considerably, their design depending chiefly on the kind of fuel intended to be used. The stack has two functions to perform: *first*, to carry off the gaseous products of combustion; and, *second*, to serve as an instrument by means of which the exhaust steam, in escaping, is enabled to create a draft through the tubes and fire. The draft caused in the firebox and tubes is due to the action of the exhaust in producing a partial vacuum in the smokebox and stack. The exhaust steam escapes in puffs, and as the puffs occur in quick succession, they tend to empty the smokebox of gases and thus produce a partial vacuum there. Atmospheric pressure then forces air through the grates and through the tubes to refill the smokebox, and in this way the draft through the fire is established and maintained—the exhaust steam forcing the gases out of the smokebox, the pressure of the atmosphere forcing air through the fire to refill the smokebox.

The exhaust steam has two direct actions on the gases in expelling them from the smokebox. *First*, when the exhaust pipes, nozzles, etc. are properly adjusted, each puff of the exhaust steam enters the stack near its base, fills it, and in passing upwards pushes the gases out of the stack, thus creating a partial vacuum in the smokebox. In fact, the effect of a puff of exhaust steam is similar to the effect that would be produced were a piston passed quickly from the smokebox up through the stack. This effect is repeated at each exhaust, and it is this plunger-like action that is most effective in creating a vacuum in the smokebox. *Second*, the friction of the particles of exhaust steam against the particles of the gases in the smokebox creates an induced current or flow of gases through the stack. This latter theory of the "entraining action" of the steam jet has been proved, by extensive experiments, to be the main factor in maintaining a vacuum at high speeds.

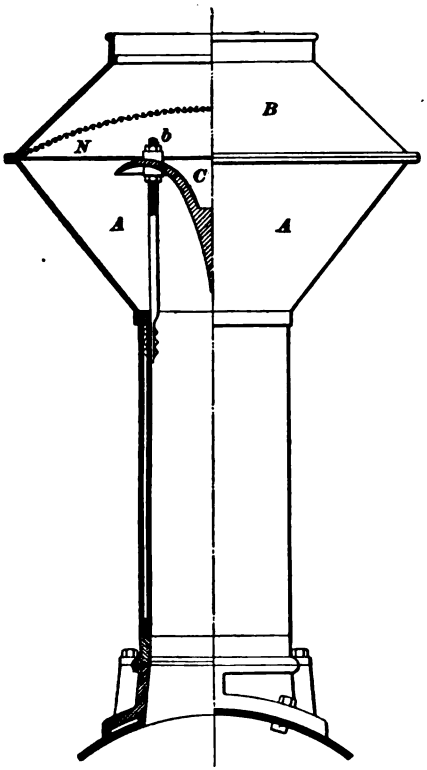

FIG. 16.

An ordinary **diamond stack**, used in conjunction with short smokeboxes, is shown in Fig. 16. In this stack, the spark-arresting device is contained in the diamond-shaped part *A B* and consists of a netting *N* extending across the stack, and of a cone-shaped casting *C*. The cone is held in place by three bolts, one of which is shown at *b*. This cone must be in an

exact line with the center of the stack, so as to distribute the draft evenly through the netting, and its point must come exactly over the exhaust tip. The position of the cone *C* may be adjusted by means of the nuts on the cone belts, above and below the cone. The object of the cone is to break up and to deflect the live cinders as they are carried up by the exhaust,

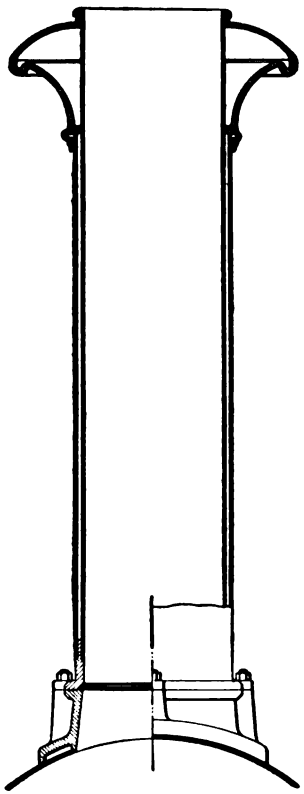

FIG. 17.

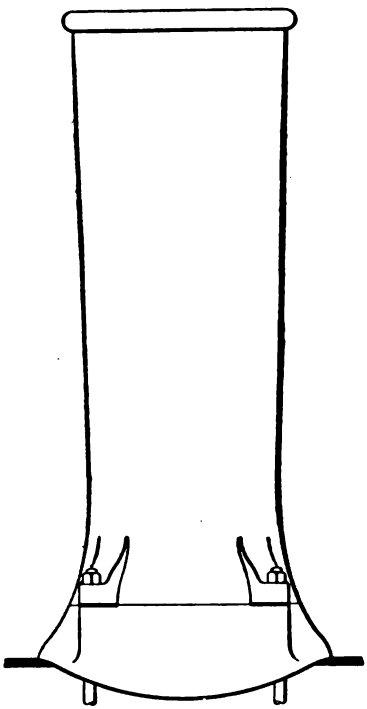

FIG. 18.

and whirl them in chamber *A* until, by the time they pass through the netting, they are more or less cooled and broken up.

The cone and netting should be frequently inspected to see that they are in proper condition. As the netting is above the exhaust pipe in this case and the steam and oil from the cylinders pass through it, the meshes become clogged with oil

and soot, and should therefore be cleaned occasionally. This can be done by burning it off by means of old waste saturated with oil or by scraping and pounding.

Fig. 17 shows one type of **straight stack** used (for either soft or hard coal) on engines having entension fronts. Fig. 18 shows one of the latest forms, which flares outwardly at the top. This stack is made of cast iron. The size of the stack, in proportion to the cylinder volume, has a great influence on the draft, a small stack producing a fiercer draft than a larger stack on the same engine, other conditions being the same.

EXHAUST PIPES.

27. Double Exhaust Pipe.—In Fig. 19 are three views, (*a*), (*b*), and (*c*), of the exhaust pipe used in connection with

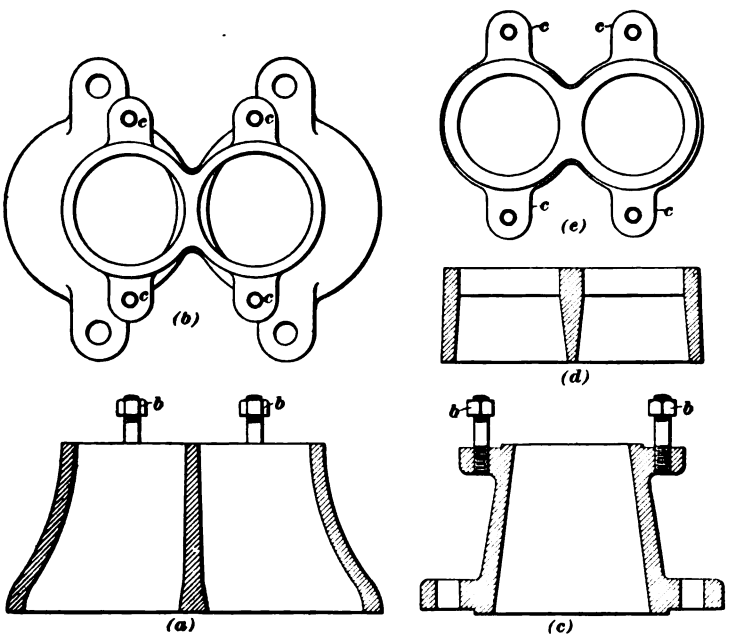

FIG. 19.

the diamond stack and petticoat pipe on engines having a short smokebox. The lower openings in the pipe (*a*) coincide with the exhaust cavities in the cylinder saddles, while the upper

openings are brought as near together as practicable in order to have them as nearly central with the petticoat pipe as possible. (*d*) and (*e*) show two views of the exhaust nozzles, (*d*) being a cross-sectional view and (*e*) a plan, or view, from above. (*c*) is a side view of (*a*). The nozzle is bored out straight for about 1 inch from the top, the remainder of the distance being tapered off. Another type of exhaust tip or nozzle has a square shoulder just below the top of the opening, as shown in Fig. 20 (*b*). The straight part, view (*a*), is intended to prevent, as much as possible, the steam spreading after it leaves the

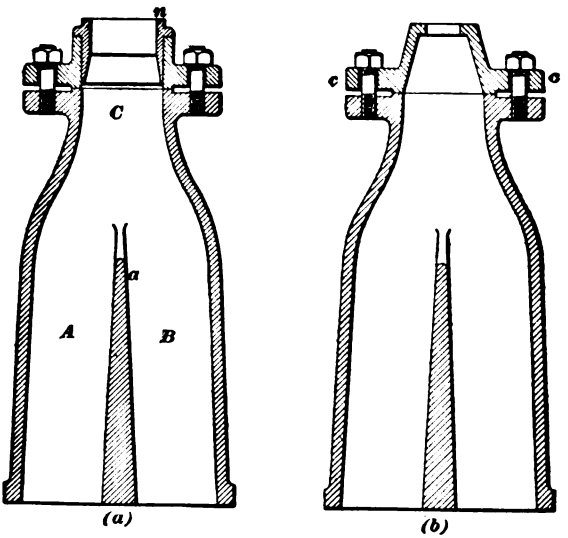

FIG. 20.

exhaust nozzle. The nozzles are made separate from the exhaust pipe, so that the size can readily be changed, if desired; they are bolted to the pipe by means of the lugs *c* and bolts *b*. The passage in the exhaust pipe is decreased in size, at the nozzle only, so as to increase the velocity of the steam as it passes out of the nozzle, which therefore creates a sharper blast and a greater draft. The pipe shown in Fig. 19 is known as a **double exhaust pipe;** it consists virtually of two pipes in one casting, the exhaust steam from the one cylinder remaining separate from that of the other throughout the passage to

the stack. Double exhaust pipes are also used with extension fronts, and are then longer than that shown in Fig. 19.

28. Single Exhaust Pipe.—In Fig. 20 is shown a **single exhaust pipe,** so named because the two passages *A* and *B*, which connect with the two exhaust passages in the steam cylinders, are combined about half way up the pipe, and have but one orifice *C* through which the exhaust steam can pass. If a different size of exhaust orifice is desired, the nozzle *n* is removed and replaced by one having an orifice of the required size.

The nozzle is held in place by means of a setscrew located in the front part of the exhaust pipe. Its upper part is bored out straight, its lower part being tapered. The partition, or bridge, *a* prevents any steam that is exhausting from one cylinder passing into the other cylinder and increasing the back pressure there. The single exhaust pipe is generally used when the exhaust pipe is high, as it has been found to give the best results, the discharge of steam being more central through the stack.

29. Size of Nozzle.—The size of the nozzle affects the draft very considerably and also the back pressure in the cylinders. The greater the velocity of the steam through the stack, the more intense will be the draft through the fire. By decreasing the size of the orifice in the nozzle, the velocity of the escaping steam, and therefore the intensity of the draft, will be increased; but the back pressure in the cylinders will be increased also, and the violent draft produced by the small nozzle will be liable to tear holes in the fire, unless a heavier fire is carried to prevent its doing so. If the nozzle is too large, the exhaust will create too light a draft, and the fire will not burn properly; but, on the other hand, the back pressure in the cylinders will be decreased.

The best size of exhaust nozzle to use depends on so many variable conditions—such as the quality of coal, the rate at which it must be burned, the size of cylinders, the steam pressure used, the inside diameter of the stack, the adjustment of

the draft appliances, etc.—that it can best be determined by experiment. The wisest plan is to use just as large a nozzle as will allow the engine to steam well, for by so doing a lighter fire can be carried and better combustion secured; at the same time the back pressure is reduced, which is equivalent to increasing the boiler pressure a corresponding amount. There is also another beneficial effect: as the draft is not so violent when a large nozzle is used, the gases remain in contact with the tubes for a greater length of time, and consequently give up a greater portion of their heat, thus effecting a further saving. If the draft tears the fire, the reason may be that the nozzle is too small.

THE BLOWER.

30. The function of the apparatus called a **blower** is to create a draft through the fire when the engine is standing still, or when not working steam. This is accomplished by passing steam through the blower, and allowing it to escape up the stack in a steady stream as nearly central as possible. The blower cock is attached to the top of the boiler, and is connected to the stack by means of a pipe. The action of the steam in creating a draft is somewhat different from the action of the exhaust steam in accomplishing the same end. Steam from a blower escapes in a continuous jet through the stack, and the plunger-like action of exhaust steam, when the engine is working slow, therefore, is not present, the draft being induced chiefly by the friction of the particles of steam against the particles of the gases in the smokebox and stack.

The blower should always be used as lightly as possible, and should not be used after the fire has been drawn, as it will induce a current of cold air to flow in, which will cool the tubes and sheets too rapidly, thus producing leaks.

In putting in a fire while the engine is standing still, the blower should be turned on lightly before opening the fire-door, as by so doing the gases present in the firebox will be prevented from pouring out of the door into the cab.

BAD-STEAMING ENGINES.

GENERAL REMARKS.

31. The modern locomotive is designed and proportioned in accordance with experience and observation, and therefore when an engine **steams badly**, it should not be too hastily charged to faulty designing. The trouble, of course, may occasionally be in the design, but it is far more likely to be due to other causes—causes over which the engineer can and should have control.

Aside from faulty design, there are three causes that will make a locomotive steam poorly, namely, (1) improper or insufficient draft; (2) the heat of the fire not being fully utilized; and (3) poor management on the part of those in the cab.

INSUFFICIENT DRAFT.

32. Insufficient draft may be due either to some obstruction in the firebox, tubes, smokebox, or stack, or to insufficient vacuum being formed in the smokebox by the exhaust steam, or to the fact that, while a sufficient vacuum may be formed by the exhaust steam, it is partly destroyed through some defect in the apparatus.

The obstruction to the draft may, perhaps, be in the grates, which may be fitted so close as to prevent a sufficient admission of air through the fire. This might fairly be charged to poor design, but it is seldom the cause of the trouble.

Some of the tubes may be stopped up, due to careless firing or to poor regulating of the draft appliances. If the draft through a number of the tubes is weak, ashes and cinders will gradually accumulate in them until, finally, they become stopped up. On the other hand, if the draft through certain of the flues is too fierce, large cinders will be drawn into these flues and stop them up. This is the case where the draft appliances are not properly adjusted to give an even draft through

all the flues. This affects the steaming of the engine in two ways: it robs the boiler of part of its heating surface, and it reduces the draft through the fire.

Where the engine has an extension front, the obstruction may be due to the deflector plate in the smokebox being too low. In this case, the flow of the gases to the smokebox will be obstructed at the deflector plate, and the draft will be reduced.

The netting in the extension front or in the smokestack (if a diamond-stack engine) may be clogged up with oil from the cylinders or a deposit of gummy substance from the coal, so as to reduce the draft and make the engine steam hard. If this is the cause of the trouble, saturate some waste with coal oil and try to burn away the obstruction. If it is stopped with cinders, remove them by jarring the netting.

If the exhaust steam does not form a sufficient vacuum in the smokebox, the engine will steam badly. **Insufficient vacuum** may be due to one or more of the following causes: The nozzle may be too large; the exhaust steam, instead of entering the stack centrally, may be impinging on its side; the steam may not be expanding sufficiently to fill the stack before it is near the top; the steam may expand so rapidly after it leaves the nozzle that it not only fills the stack at the base, but some of it strikes the smoke arch below the stack; or, again, the petticoat pipe, when used, may be out of line with the stack, so that it does not deliver the exhaust steam to the stack in the proper manner.

The smokestack and the exhaust pipe and nozzles may be properly designed and adjusted to give the required vacuum in the smokebox for the engine to steam freely, but the vacuum may be partly destroyed by steam leaking into the smokebox from the steam pipes, or by air leaking into the smokebox from the outside.

HEAT NOT PROPERLY UTILIZED.

33. The engine may have sufficient draft to burn the coal freely, and yet steam badly, for the circulation of the water may be poor, or the boiler may be very dirty and so badly scaled that the water cannot reach the heating surfaces, in which case it

will be almost impossible to keep up steam. Mud and scale in a boiler lead to a great waste of coal.

If the draft is not equalized through the tubes, it affects the steaming qualities of the engine very considerably. It decreases the heating surface of the boiler, and the velocity of the gases, etc. must be increased considerably to pass them through the reduced tube area in the same interval of time. By increasing their velocity, they have less time in which to deliver their heat to the water as they pass through the tubes, consequently they are much less effective in making steam.

POOR MANAGEMENT.

34. The manner of firing and feeding a boiler has much to do with its steaming qualities. To get the best results, these two operations must be performed in harmony; that is, the engineer should aim to feed the boiler in such a way as to assist the fireman as far as possible. The fireman, on the other hand, should see that a good bright fire is maintained, especially when the injector is in use, and both the firing and the boiler feeding should be performed according to the latest approved methods.

The fireman may be ever so capable, and may do his best to better his coal record, but if the engineer does not perform his work with a view to economy, the fireman's efforts will come to naught. He may save by the ounce while the engineer wastes by the pound if they work independently of each other; such a course would certainly be considered poor management.

Of all the causes that make an engine steam badly, improperly adjusted draft appliances are probably the most frequent. However, no set rule can be given for their adjustment, as what will make one engine steam may not help another.

COMBUSTION AND FIRING.

CHEMICAL ELEMENTS AND COMPOUNDS.

GENERAL DEFINITIONS.

35. Every body or mass of matter is either an *element*, a *compound*, or a *mixture*.

A **compound substance** is formed by the chemical combination of two or more elements, and therefore can always be decomposed into separate substances. Water, for example, is a compound formed by the chemical combination of the gaseous elements *hydrogen* and *oxygen*, and it can be decomposed into these two elements by passing a current of electricity through it. Any substance that can be decomposed into other substances is called a *compound*. Examples of compound substances are wood, salt, lime, and the resultant gases of combustion.

Such substances as cannot be decomposed or broken up into separate substances by any known means are called **elements.** Silver, for example, is an element, and it is made up of but one substance. The innumerable compound substances surrounding us are really made up of a comparatively small number of elements, only seventy-four of them having been discovered up to the present time. Some of the more common elements are oxygen, hydrogen, nitrogen, carbon, sulphur, tin, lead, iron, copper, zinc, gold, silver, nickel, and mercury. Of these, the first four form the chief constituents of air, water, coal, and wood, and are the only ones that will be considered here. The elements are generally represented by symbols, which usually are the first letter of their names. Thus, *O* stands for oxygen; *H*, for hydrogen; *N*, for nitrogen; and *C*, for carbon.

Atoms of elements combine to form molecules of elementary and of compound substances. An **atom** is defined by chemists as *the least part of an elementary substance that can enter into or be expelled from a compound.* Atoms of the same element are always of equal weight and volume, but they may differ in

weight or volume, or in both, from atoms of other elements. They never exist in a separate state, but always combine with one or more atoms to form a *molecule.*

A **molecule** *is the smallest quantity of an element or compound that is capable of a separate existence.* It is the physical unit of matter, and can be divided into its atoms only by a chemical process.

ELEMENTS.

36. Oxygen.—The element oxygen is a colorless, tasteless, inodorous gas, at ordinary temperatures, but, if subjected to very great pressure and very low temperature, it will be reduced to a liquid. It is very widely distributed, and is the most abundant of all the elements, being found in a free state in the air, and in combination in water, and is present in most of the substances that form the crust of the earth. It is the only element that will support respiration (process of breathing), and it is absolutely necessary for both animal and vegetable life, and for purposes of combustion.

37. Hydrogen.—This, also, is a colorless, tasteless, inodorous gas, being the lightest known substance. Its density is .0691, that of air being 1. On account of its lightness, balloons are generally filled with hydrogen. It is very widely distributed, forming about 11 per cent. of water, 4.5 per cent. of wood, and about 2 per cent. of coal. Hydrogen cannot support respiration, but still is not poisonous. It does not unite rapidly with oxygen at ordinary temperatures, but, like other combustible substances, must be heated to its igniting temperature, when it burns with a colorless or a slightly blue flame, forming water. It is inflammable when mixed with oxygen, and explodes when in contact with a flame.

38. Nitrogen.—This gas is destitute of color, taste, and odor. It can support neither combustion nor animal life. Although it will not burn, yet it has no poisonous properties. It is found in a free state in the air, of which it forms four-fifths; it is also found in combination in a large number of substances, some of the most common of which are saltpeter,

sodium salt, Chile saltpeter, and ammonia. Nitrogen also occurs, in chemical combination, in most animal substances. It acts as a diluent in the air, and renders burning less active than it would be in oxygen alone.

39. Carbon.—At ordinary temperatures, carbon will not combine with any of the elements, but, at high temperatures, it combines readily, especially with oxygen, for which it seems to have a very strong affinity. Carbon occurs principally in combination with various other elements, and in fact is the central element of all organic matter, both vegetable and animal. Petroleum consists of a number of compounds that contain only carbon and hydrogen. Sugar, starch, and fats contain the elements—carbon, oxygen, and hydrogen. Carbon occurs in the air as carbon dioxide, and in the earth as calcium carbonates, such as marble, limestone, chalk, etc. In the free state, carbon is found in the shape of the diamond, and also as graphite, or plumbago. As the diamond, it is the hardest substance known, is insoluble, is a non-conductor of electricity, and can only be burned at a white heat in oxygen. Graphite, also, is insoluble, of a grayish-black color, quite soft, a fairly good conductor of electricity, and is used in "lead" pencils, and also as a lubricant; it burns if heated to a very high temperature. Carbon occurs also as charcoal, coke, lampblack, and, in an impure state, as coal.

THE COMPOUNDS—WATER, COAL, AND WOOD.

40. Water.—Water is formed by the chemical combination of 2 atoms of hydrogen with 1 atom of oxygen. An atom of oxygen weighs 16 times as much as an atom of hydrogen; therefore, water consists, by weight, of 8 parts of oxygen and 1 part of hydrogen, or by volume, of 2 parts of hydrogen to 1 part of oxygen.

Water not only occurs in the air and on the earth, but it occurs in combination in many mineral substances, and also in all organic bodies, forming from 80 to 90 per cent. of the substance of which all living things are made. It is the best solvent known, more substances dissolving in it than in any

other liquid. As an agent by means of which the heat of coal may be converted into mechanical work through the medium of the steam engine, it has no equal, for the reason that it is cheap and abundant, and is the most efficient absorbent of heat of any known substance, hydrogen alone excepted, while its capacity for storing and retaining heat is exceedingly great. It is almost incompressible, and is a poor conductor of heat and electricity. In cooling, water contracts and becomes denser until about 39° F. is reached, when its greatest density is attained; further cooling now causes it to expand until, at 32° F., it freezes and becomes a solid, expanding considerably when in the act of freezing. This expansion reduces the specific gravity of ice to .916, on account of which it floats. Pipes are often burst by the expansion of the water in them while freezing.

When heated, water contracts and becomes denser until 39° F. is reached, above which temperature it expands and becomes less dense, and boils at 212° F. One cubic inch of water weighs .03614 pound; a column of water of 1 inch square section and 12 inches high weighs .434 pound; 1 gallon of water weighs 8.355 pounds; and 1 cubic foot of water contains 7.48 gallons.

41. Coal.—The value of any particular coal as a fuel depends on the quantity and *calorific value* of the combustibles that it contains.

By **calorific value** is meant the heat-producing value of a combustible substance, or fuel. For example, laboratory experiments have demonstrated that 1 pound of carbon will produce 14,500 units of heat in burning; and 1 pound of hydrogen, 62,000 units of heat. The calorific, or heat-producing, value of carbon, therefore, is said to be 14,500 heat units, and that of hydrogen 62,000 heat units.

The quantity of heat produced by a fuel cannot be measured directly in pounds or gallons, as in the case of substances; it must be measured by the effect it produces. The usual method of measuring the amount of heat given off by the combustion of a certain quantity of fuel is to measure

the change of temperature it produces in a known weight of water. The unit quantity of heat is the quantity required to raise the temperature of 1 pound of water through 1° F. This quantity is usually called a **heat unit.**

The *combustible*, or *heat-producing*, elements of coal are carbon and hydrogen. Two kinds of coal may have the same percentage of combustible and ash and yet have different heat values as a fuel, for the heat value depends on the relative amounts of carbon and hydrogen contained.

As a fuel, coal is classified as **anthracite**, or hard, coal, and **bituminous**, or soft, coal. The average composition of coal, taking both hard and soft into account, is about as follows:

Carbon	86.45%
Hydrogen	2.00%
Oxygen and Nitrogen	2.20%
Water	3.45%
Ash	5.90%
	100.00%

Carbon, it will be observed, is the chief ingredient of coal; it forms the solid portion—that which remains as coke after the other elements have been separated from it by the heat. The hydrogen is driven off as a gas when the coal is heated, and forms water vapor by combining with the oxygen in the air. The ash is made up of the incombustible impurities contained in the coal, from which *clinkers* are formed by the ashes melting when subjected to a sufficiently high temperature.

Soft coal contains much less carbon than hard coal, but more hydrogen and other substances, which, when the coal is heated, are driven off as a mixture of volatile gases and vapors.

One cubic foot of hard coal, in ordinary sizes, weighs about 54 pounds. One cubic foot of soft coal weighs about 51 pounds. In locomotive boilers, 1 pound of coal evaporates from 6 to 9 pounds of water, according to the quality of coal, etc.

42. Wood.—As a fuel, wood is divided into two classes: the hard woods, such as maple, oak, hickory, etc., and the soft woods, such as pine, birch, poplar, etc.

The value, as fuel, of equal weights of different woods, when equally dry, is very nearly the same. In other words, 1 pound of maple is no better for fuel than 1 pound of pine or poplar, provided both contain the same percentage of water. Water in fuel is very detrimental, every 10 per cent. of moisture reducing its value as a fuel about 12 per cent.

Wood cut in winter will retain, by the end of the following summer, about 40 per cent. of its water, while, after several years in a dry place, it still retains from 15 to 20 per cent. of it. If wood that has been thoroughly deprived of all moisture is exposed to the outside atmosphere, it will absorb about 5 per cent. of moisture in three days, after which it will continue to absorb moisture until it contains about 16 per cent.; it will then absorb no more.

The chemical composition of the various woods is nearly the same for all, and is about as follows for ordinary fire-wood:

Carbon	37.50%	Nitrogen	.75%
Hydrogen	4.50%	Water	25.00%
Oxygen	30.75%	Ash	1.50%

Two and one-half pounds of good dry wood is generally assumed to evaporate as much water as 1 pound of good coal. A *cord* of wood consists of a pile 4 feet wide, 4 feet high, and 8 feet long.

MIXTURES.

43. Definition.—A **mixture** may consist of two or more elementary substances, or compound substances, or both elementary and compound substances, mixed together, but not combined chemically. For example, gold and silver filings may be mixed together to form a mixture; sand and iron filings mixed together form another example; salt water is another instance of a mixture, while the atmosphere forms, perhaps, the most familiar example of all. Air is a mechanical mixture, consisting of 23 parts, by weight, of oxygen to 77 parts of nitrogen. These gases are not combined chemically—they are simply mixed together.

44. Air.—The atmosphere consists of a fluid, called **air,** that completely surrounds the earth to an estimated height of about 40 miles. It is held in place by its own weight. The weight of the atmosphere is such that it exerts a pressure of 14.7 pounds per square inch at the sea level—a pressure sufficient to balance a column of mercury 30 inches high, or a column of water 34 feet high. This pressure is sufficient to force the air into all holes, crevices, and porous substances, so that it penetrates the earth to a considerable depth, its density increasing with the depth.

Ordinarily, pure air has no color, taste, or odor; it consists chiefly of a mixture of 4 volumes of nitrogen and 1 volume of oxygen, or, by weight, of about 3.5 parts of nitrogen and 1 part of oxygen. Besides nitrogen and oxygen, air always contains small amounts of carbon dioxide, water, and also a trace of a lately discovered gas called *argon.* It is through the medium of the atmosphere that the oxygen so necessary to animal and vegetable life, and to the process of combustion, is furnished in its free state. At 62° F., 13.14 cubic feet of air weighs 1 pound.

CHEMICAL COMBINATION.

GENERAL PRINCIPLES.

45. When two or more elements are brought into contact under favorable conditions, they combine to form a compound substance unlike either of the elements. The nature of the compound will generally be very different from the nature of the elements, so far, at least, as we can perceive. For example, hydrogen burns in the air with a light-blue flame; this burning is a form of chemical combination in which the gaseous element, hydrogon, unites with the gaseous element, oxygen, of the air, and forms water—a compound substance with properties entirely different from those of either oxygen or hydrogen.

When elements combine chemically to form a compound substance, **heat is always produced;** when compound

substances are decomposed or separated into their elements, **heat is absorbed.** Thus, when carbon and oxygen are brought together at a high temperature, they combine and form carbon dioxide; hydrogen and oxygen combine and form water; nitrogen combines with hydrogen and forms ammonia, a gas that differs greatly from both nitrogen and hydrogen.

In each of these combinations a certain amount of heat is produced, while, to separate the compounds into their elements again, an amount of heat exactly equal to that produced by their combination will be absorbed.

The production of heat during combination is the result of the atoms of the elements coming rapidly and violently together, due to a chemical attraction existing between them. Their *kinetic energy* is converted into heat when they collide, just as the kinetic energy of a cannon ball is converted into heat when it is stopped by a target. **Kinetic energy** is energy due to the motion of a body.

The molecules of most elementary gases, such as hydrogen, oxygen, and nitrogen, are supposed to be made up of 2 atoms each. It is supposed, also, that equal volumes of all gases, whether simple or compound, contain the same number of molecules. For example, a cubic foot of air contains the same number of molecules as a cubic foot of hydrogen, oxygen, or steam, provided they are at the same pressure and temperature.

When oxygen and hydrogen are brought in contact at a sufficiently high temperature, the attraction of the oxygen for the hydrogen becomes so great that each molecule of oxygen is separated into its 2 atoms, each of these atoms seizing 2 atoms of hydrogen and combining with them to form a molecule of water. As an atom of oxygen combines with 2 atoms of hydrogen, in this case 2 volumes of hydrogen will be required for every volume of oxygen, and they will not combine to form water in any other proportions. For instance, if 2 volumes of oxygen were placed in contact with 2 volumes of hydrogen, 1 volume of oxygen would combine with 2 volumes of hydrogen and form 2 volumes of water (i. e., water vapor), 1 volume of oxygen remaining uncombined.

COMBINATION BY WEIGHT.

46. A cubic foot of oxygen weighs 16 times as much as a cubic foot of hydrogen. Now, since a cubic foot of oxygen

TABLE I.

Element.	Symbol.*	Atomic, or Combining, Weight.
Hydrogen . . .	*H*	1
Oxygen	*O*	16
Nitrogen . . .	*N*	14
Carbon	*C*	12

contains the same number of atoms as a cubic foot of hydrogen, each atom of oxygen must weigh 16 times as much as an atom of hydrogen.

The **atomic weight** of an element is the ratio between the weight of an atom of the element and the weight of an atom of hydrogen. It may be found by dividing the weight of a cubic foot of the element, when in a gaseous state, by the weight of a cubic foot of hydrogen.

The atomic weight of a few of the more common elements is given in Table I.

By the aid of the atomic weight, we can find the composition, by weight, of any compound substance when its chemical formula is known. The formula for water is H_2O; this tells us that 2 atoms of hydrogen have combined with 1 atom of oxygen to form water. The weight of the 2 atoms of hydrogen being 2, that of 1 atom of oxygen will be 16. Water therefore consists of 2 parts, by weight, of hydrogen, and 16 parts, by weight, of oxygen, and the molecular weight of water will be 16 + 2, or 18.

*For brevity, each of the chemical elements is denoted by one or more letters of its name, called its *symbol*. A compound is expressed by combining the separate symbols of its elements; such a combination is called its *chemical formula*.

COMBUSTION.

DEFINITION.

47. Combustion, or "burning," as it is properly called, is a very rapid chemical combination of oxygen of the air with any combustible material, producing both heat and light.

Oxygen has a very strong affinity for most elements, and especially for carbon, with which it combines very rapidly whenever they come in contact with each other at a sufficiently high temperature. The more rapid the combination, the greater is the quantity of heat given off in a unit of time, and, consequently, the higher the temperature produced. Substances with which oxygen combines readily are called **combustibles,** or **fuels.**

CARBON AND HYDROGEN.

48. The combustible substances in coal, wood, oil, etc. are **carbon** and **hydrogen.** The combustion of fuel, therefore, *is the rapid chemical combination of the carbon and hydrogen in the fuel with the oxygen of the air.*

Carbon combines with oxygen in two proportions, forming distinct substances having different chemical properties. (1) One atom of carbon may combine with 2 atoms of oxygen and form **carbon dioxide** (carbonic-acid gas), represented by the formula CO_2; or (2) 1 atom of carbon may combine with but 1 atom of oxygen and form **carbon monoxide** (carbonic oxide), whose formula is CO.

When carbon and oxygen combine to form carbon dioxide, **complete combustion** is said to have been secured. When it combines with oxygen and forms carbon monoxide, there is said to be **incomplete combustion.** Carbon monoxide is a very poisonous gas; even when but a very small volume is present in the air, it quickly produces insensibility and death.

Carbon dioxide is formed when carbon is burned in a sufficient supply of air, that is, when oxygen is present in

such quantities that each atom of carbon can have 2 atoms of oxygen with which to combine.

Carbon monoxide may be formed in two ways: by burning carbon in an insufficient supply of air, or by reducing carbon dioxide to carbon monoxide by passing it over heated carbon. In the latter case, each molecule of oxygen combines with an atom of carbon and forms 2 molecules of carbon monoxide.

The chief gaseous constituent of coal is what is called **carbureted hydrogen;** it consists of 4 atoms of hydrogen and 1 of carbon in chemical combination.

When carbureted hydrogen is heated to its igniting temperature, the atoms of hydrogen and carbon are separated, and each combines with oxygen. Oxygen has a greater affinity for hydrogen than for carbon, and, consequently, the hydrogen is the first to combine, forming water. The carbon then combines with the oxygen and forms carbon dioxide. This is the order in which the gaseous portion of the coal always burns.

AIR REQUIRED FOR COMPLETE COMBUSTION.

49. Carbon.—Theoretically, to completely burn carbon, 12 parts of it, by weight, must combine with 32 parts of oxygen; therefore, for every pound of carbon burned, $\frac{32}{12}$, or 2.67, pounds of oxygen must be supplied. As only about 23 per cent. of the air is oxygen, $\frac{2.67}{.23}$, or 11.6, pounds of air must be supplied for every pound of carbon consumed; that is, 11.6 pounds of air contains 2.67 pounds of oxygen, and, theoretically, should supply sufficient oxygen to completely burn 1 pound of carbon. The remainder of the 11.6 pounds of air, viz., 8.93 pounds of nitrogen, passes off with the 2.67 + 1, or 3.67, pounds of carbon dioxide, as the products of combustion.

50. Hydrogen.—The hydrogen of the fuel combines in the proportions, by weight, of 2 parts of hydrogen to 16 parts of oxygen, forming water, which, of course, is in the form of vapor. One pound of hydrogen therefore requires $\frac{16}{2}$, or 8, pounds of

TABLE II.

Combustible.	Weight of Oxygen Required to Burn 1 Pound of Combustible.	Quantity of Air at 60° F. Required to Supply the Necessary Oxygen.		Products of Combustion.
One Pound of—	Pounds.	Pounds.	Cu. Ft.	Pounds.
Carbon, burning to carbon dioxide	2.670	11.60	152	3.67 carbon dioxide and 8.93 nitrogen.
Carbon, burning to carbon monoxide	1.335	5.80	76	2.335 carbon monoxide and 4.465 nitrogen.
Carbon monoxide, burning to carbon dioxide	.570	2.48	33	1.57 carbon dioxide and 1.91 nitrogen.
Hydrogen	8.000	34.80	457	26.8 nitrogen and 9 water.
Carbureted hydrogen	4.000	17.40	230	2.745 carbon dioxide, 13.405 nitrogen, and 2.25 water.
Average coal	2.530	11.00	140	2.98 carbon dioxide, 8.52 nitrogen, and .45 water.
Wood	1.400	6.08	80	1.83 carbon dioxide, 6.08 nitrogen, and .546 water.
Petroleum	3.460	15.00	197	3.17 carbon dioxide, 11.55 nitrogen, and 1.28 water.

To determine the quantity of air, in cubic feet, from the weight in pounds, multiply by 13.14 (see Art. 44).

oxygen for complete combustion. Since each pound of air contains .23 pound of oxygen, $\frac{8}{.23}$, or 34.8, pounds of air will be required for the complete combustion of 1 pound of hydrogen. The products of combustion will be 34.8 — 8, or 26.8, pounds of nitrogen, and 8 + 1, or 9, pounds of water.

51. Carbon Monoxide.—The combustion of a pound of carbon, to form carbon monoxide, requires but half as much oxygen as would be required to form carbon dioxide; therefore, but half the air is required. Since it requires 2.67 pounds of oxygen, or 11.6 pounds of air, to burn 1 pound of carbon to carbon dioxide, we see that to burn it to carbon monoxide would require 1.335 pounds of oxygen, or 5.8 pounds of air, and the products of combustion would be 2.335 pounds of carbon monoxide and 4.465 pounds of nitrogen.

52. Carbon Dioxide.—Carbon monoxide, in burning to carbon dioxide, combines with oxygen in the proportions, by weight, of 28 parts of carbon monoxide to 16 parts of oxygen. One pound of carbon monoxide therefore requires $\frac{16}{28}$, or .57, pound of oxygen, or $\frac{.57}{.23} = 2.48$ pounds of air for complete combustion. The products of combustion in this case are: 1 + .57, or 1.57, pounds of carbon dioxide, and 2.48 — .57, or 1.91, pounds of nitrogen.

The theoretical quantities of oxygen of air necessary for complete combustion of various combustibles, together with the products of combustion in each case, are given in Table II.

HEAT OF COMBUSTION.

53. When carbon burns to carbon dioxide, it combines with the greatest amount of oxygen possible, and therefore produces its greatest quantity of heat; when it only burns to carbon monoxide, it combines with but half the oxygen possible, and produces less than one-third the heat that would be generated were it burned to carbon dioxide. This is shown in

TABLE III.

Combustible.	Total Heat of Combustion, in Heat Units of 1 Pound of Combustible.
One Pound of—	
Hydrogen	62,000
Carbon, burned to carbon monoxide	4,400
Carbon, burned to carbon dioxide	14,500
Carbon monoxide, burned to carbon dioxide	10,100
Carbureted hydrogen	23,500
Coal (average composition)	14,100
Wood	7,950
Petroleum	21,000

Table III, which gives the total number of heat units produced by the complete combustion of various combustibles.

By completely burning the carbon, 14,500 heat units are produced, while if it is only burned to carbon monoxide, only 4,400 heat units are produced, that is, 10,100 heat units are wasted for every pound of carbon incompletely burned.

TEMPERATURE OF COMBUSTION.

54. Theoretical Temperatures.—In Table III was given the total quantity of heat generated in burning 1 pound of a certain fuel. In Table II were given the weight and nature of the products of combustion.

The above-mentioned quantity of heat will heat the gaseous products of combustion to a certain degree of temperature, depending on their weight and on the number of heat units necessary to raise 1 pound of the gases 1° F. Of course, as the weight and nature of the products of combustion differ for different fuels, the temperatures due to their combustion will differ.

The *theoretical temperature of combustion* of the following fuels has been calculated on the assumption that just enough air for complete combustion is supplied, no allowance being made for losses of heat.

TABLE IV.

Combustible.	Resulting Temperature of Combustion in Degrees Fahr.
Hydrogen	5,750
Carbon, burning to carbon dioxide	4,872
Carbon, burning to carbon monoxide	2,668
Carbon monoxide, burning to carbon dioxide	5,367
Carbureted-hydrogen gas	9,624
Seasoned wood	2,867
Average bituminous coal	4,080
Average anthracite coal	4,170
Coke or charcoal	4,350

These theoretical temperatures are *never attained in practice*, for the following reasons: Combustion is seldom complete; and excess of air is always supplied; fuel is never entirely consumed; heat is lost by radiation; and moisture present in the fuel absorbs some of the heat.

55. Igniting Temperature.—Oxygen does not combine with many substances at ordinary temperatures. Usually, before it will combine, the temperature of the substance must be raised to a certain degree, which is generally different for different substances. Some substances require but a slight increase in temperature before they will combine with oxygen, while others require to be heated to a very high temperature. Phosphorus, for example, combines with oxygen at a temperature of only 150° F.; sulphur at 500° F.; wood at about 1,000° F.; and coal at about 1,800° F. While the temperatures at which substances combine with oxygen differ, yet it is always the same for the same substance; that is, *a given substance always combines with oxygen at a certain temperature, called its* **igniting temperature.**

When a match is struck upon a rough surface, the friction between the match and the surface generates sufficient heat to raise the temperature of the phosphorus of the match to its igniting temperature, 150° F., when it ignites and burns; in burning, it increases the temperature of the sulphur to the

igniting temperature, 500° F., when the sulphur burns; this raises the temperature of the wood next the sulphur to its igniting temperature, 1,000° F., and it in turn takes fire. It will be noticed, however, that the entire surface of the match is not ignited at the same time, but that it begins to burn next the sulphur first, and gradually burns toward the other end of the match. The reason for this is that only a portion of the wood near the flame is heated to the igniting temperature. This takes fire, and heats another portion of the wood nearest it to the igniting temperature, which in turn burns, and so on gradually until the match is consumed. The illustration of the burning of a match brings out very nicely the fact that every combustible substance has a definite igniting temperature; that is, *a temperature at which it unites with oxygen, and below which it will not ignite or burn at all.*

COMBUSTION OF COAL.

56. Bituminous Coal.—Coal is a compound substance, consisting chiefly of carbon and hydrogen, in which elements practically its entire heating properties lie. If these are completely burned, the coal will produce its greatest quantity of heat; while, on the other hand, if they are not completely burned, part of the heat that the coal should produce in burning will pass off as unburned gases and smoke.

One hundred pounds of average *bituminous coal* consists of about 80 pounds of solid carbon, 5 pounds of hydrogen, and 15 pounds of oxygen, nitrogen, sulphur, and ash. When this coal is heated, the hydrogen is driven off, taking with it, in combination, 15 pounds of carbon, forming 20 pounds of carbureted-hydrogen gas, and leaving behind about 65 pounds of solid carbon. Thus, for every 100 pounds of coal there are about 65 pounds of solid carbon and 20 pounds of carbureted hydrogen to be burned, the remaining 15 pounds being waste, partly in the gaseous form and partly as solid matter. About one-fifth, by weight, of the coal is carbureted-hydrogen gas, which, as seen in Table IV, makes the hottest fire of any fuel there given. Its igniting temperature is rather high, however (about 1,800° F.), and if any part of the firebox is cooled

below this, part of the gases will pass away unburned, causing a great waste of heat.

Fresh coal, when thrown on the fire, absorbs heat, which raises its temperature and drives off the hydrogen and a portion of the carbon, combined in various chemical unions known as **hydrocarbons** of which carbureted hydrogen CH_4 is one. Before burning takes place, this preparatory process of decomposition always occurs, and the products then burn in a certain regular order; the gases burn first, combining with the oxygen of the air to form water and carbon dioxide, while the coke burns last, combining with oxygen to form carbon dioxide.

57. Air Required for Combustion.—For every pound of coal burned in a firebox, enough air must be supplied to furnish sufficient oxygen for the complete combustion of .2 pound of carbureted-hydrogen gas, and .65 pound of carbon. Since, according to Table II, 152 cubic feet of air are necessary to supply sufficient oxygen to completely burn 1 pound of carbon, it will be seen that $.65 \times 152$, or nearly 99, cubic feet must be supplied in burning .65 pound. To completely burn .20 pound of carbureted hydrogen, $.20 \times 230$, or 46, cubic feet of air must be supplied. The gaseous products of this coal therefore require practically one-half as much air for combustion as does the solid carbon or coke, so that, to completely burn 1 pound of coal, about 150 cubic feet of air must be supplied.

This is the *theoretical quantity* of air required, and it is calculated on the assumption that the air is so intimately mixed with the carbon and gases of the fuel that *all* its oxygen combines with the fuel. Practical experience, however, teaches us that the air does not mix very thoroughly with the combustible parts of the coal in the firebox, some of it passing through the tubes and up the stack, without having an opportunity to part with its oxygen. If, therefore, only the theoretical amount of air were admitted to the firebox, it would not supply sufficient oxygen to completely burn the coal, and thus heat would be wasted.

Practical experience in locomotive work, in fact, seems to indicate that about 250 cubic feet (nearly 19 pounds) of air per pound of coal is necessary to secure *complete combustion* when admitted in the proper manner. A less amount will not give complete combustion.

If too much air is admitted to the firebox, it wastes heat in two ways: (1) The extra air is heated in the firebox and carries a great deal of heat with it as it escapes through the stack at a high temperature. (2) In order that this increased volume of gases and air may pass through the tubes in a given time, they must acquire a greater velocity, and consequently they will have less time in which to impart their heat to the water.

The effect of admitting too much air to the firebox can very readily be seen by opening the fire-door, for the large volume of cool air thus allowed to pass into the firebox absorbs and carries away so much heat that the steam pressure begins to drop almost at once. The same effect is noticed when holes are allowed to form in the fire.

58. Regulation of Air Supply.—To properly burn the coal, a sufficiently high temperature must be maintained, and the admission of the air must be regulated in such a way as to completely burn both the coke and the gases. Most of the air required for burning this coke can be supplied through the fire, but the air for burning the distilled gases and for assisting in the combustion of the upper layers of coal must be supplied above the fire.

As the air passes up from the ash-pan through the grates, its oxygen combines with the carbon of the coal and forms carbon dioxide, generating all the heat due to this union. The carbon dioxide (which is necessarily at a very high temperature) unites, in passing through the upper layers of coke, with another atom of carbon, and is reduced to carbon monoxide, heat being absorbed by the reduction. This carbon monoxide passes on up into the firebox, and if there is not sufficient oxygen present to unite with it and burn to carbon dioxide, it will pass away in an unburned condition, with a resulting loss of

heat. If sufficient oxygen is present, however, the carbon monoxide will combine with another atom of oxygen and again form carbon dioxide, generating 10,000 heat units.

It is impossible to so regulate the thickness of the fire as to allow sufficient air to be admitted through the grates to burn both the coke and also the volatile gases of the coal. The greatest quantity of air is required just after a charge of coal is put in, and, if the fire is sufficiently thin to supply the necessary air at that time, it will supply too much as soon as the gases have been burned. Then, again, as regards facilitating the air supply, the fire would require to be thinnest when the engine was making its greatest effort, and, at such times, the exhaust would be most violent, and would tear holes in the fire, through which large quantities of cold air would flow, and so reduce the temperature of the firebox, besides carrying small pieces of unburned coal into the tubes, thus causing a still further waste.

To properly burn bituminous coal, then, air for the combustion of the coke should be supplied through the grates, while a sufficient quantity for the combustion of gases and the upper layers of coal should be admitted above the fire. The front damper of the ash-pan should be kept closed as long as sufficient air can be supplied through the back dampers.

59. Consumption of Gaseous Products.—It has already been seen that 100 pounds of average bituminous coal produced, in coking, about 65 pounds of solid carbon and 20 pounds of volatile gases. To secure the combustion of the coke or carbon only, would be a comparatively simple matter; it is in the thorough burning of the gases that the chief difficulty is experienced. *To completely burn the gases* it is necessary: (1) to maintain them at the igniting temperature while in the firebox; (2) to admit sufficient air for their complete combustion; and (3) to admit this air in as small streams as practicable, so that the air and the gases may mix as quickly and completely as possible while in the firebox and at the igniting temperature.

The coke can take its own time for burning, as it remains on

the grates until consumed. The gases, on the other hand, begin their flight to the tubes the moment that they are distilled; they have, consequently, but a fraction of a second in which to mix with the air and burn before they reach the tubes. *Time*, therefore, has a very important influence on the *combustion of the gases*, and if they do not have sufficient time to mix completely with the air while in the firebox, and at an igniting temperature, they pass off unconsumed, as no combustion takes place within the tubes. This is why a brick arch aids combustion.

Air for the combustion of the gases should not be admitted in large streams, as, for instance, when the fire-door is opened, for in that case it forms a distinct current of cold air that does not mix with the gases but cools them below the igniting temperature, and they pass off unburned. When admitted in small streams, the air is heated quickly and becomes more thoroughly mixed with the gases, and complete combustion is then more nearly secured. The volume of gases is greatest just after coal is put in; the greatest volume of air, therefore, should be supplied at that time, and the supply diminished as the volume of gases generated diminishes.

60. Temperature in Firebox.—The igniting temperature of the gases given off by the coal is about 1,800° F. The maximum temperature attained in the firebox of a locomotive is from 2,000° to 2,500° F.; therefore, the difference between the igniting temperature of the gases and the maximum temperature in the firebox is so small, comparatively, that constant care must be exercised to prevent the temperature falling below 1,800° F. It becomes necessary, therefore, to judge of the temperature in the firebox by the appearance of the fire, for if the temperature is known, the conditions of combustion may be inferred. The appearance of the fire at different temperatures is given in Table V.

The theoretical temperature of combustion of average bituminous coal was given in Table IV, as 4,080° F. As just stated, the temperature attained by the combustion of bituminous coal in the firebox of a locomotive is from 2,000°

to 2,500° F.; this difference between theoretical and actual temperatures is due to the losses of heat that take place during combustion in the firebox. These losses are as follows: (1) heat is lost by some of the gases escaping unburned, and by small pieces of coal dropping through the grates or being

TABLE V.

Temperature in Degrees Fahrenheit.	Appearance.	Temperature in Degrees Fahrenheit.	Appearance.
980	Red—just visible.	2,010	Dull orange.
1,290	Dull red.	2,190	Bright orange.
1,470	Dull cherry red.	2,370	White heat.
1,657	Full cherry red.	2,550	White welding heat.
1,830	Bright red.	2,740	Dazzling white heat.

drawn through the tubes unconsumed; (2) more air is usually supplied than is required for combustion, and, as this superfluous air and the resultant gases of combustion pass out through the stack, they carry off heat, which reduces the temperature in the firebox; (3) there are losses due to radiation and convection of heat from the boiler; and (4) there is the absorption of heat by the water in the boiler.

The heat absorbed by the water is the chief factor in the reduction of the temperature, and it is due principally to this loss that a higher temperature is not obtained.

SMOKE.

FORMATION OF SMOKE.

61. Smoke, such as is seen issuing from a chimney or from the smokestack of a locomotive, consists simply of water vapor and the gaseous products of combustion, colored with fine particles of carbon; the blacker the smoke, the more carbon is present as coloring matter.

The **formation of smoke** takes place as follows: When a quantity of fresh bituminous coal is thrown into the firebox, it absorbs heat so rapidly that the temperature there is reduced

below that of ignition of the gases, which, as they are driven off from the coal, appear as a dark-yellow or brownish-colored vapor. This vapor is not the same as that which issues from the smokestack, called *smoke*, but is carbureted-hydrogen gas (chiefly olefiant gas and marsh gas, of about the same nature as the gas used in house lighting), colored by tarry matter, sulphur, and other volatile ingredients.

When the carbureted hydrogen attains the proper temperature, it ignites and burns as a flame. The hydrogen unites with oxygen and passes off as water vapor, or steam; the carbon liberated is partly consumed, and partly passes away unconsumed as small particles of solid carbon, called **soot.** It is this latter that colors the escaping gases of combustion and forms what is called smoke.

Had sufficient oxygen been present and in contact with the carbon while its temperature was high enough for them to combine, all the carbon would have been burned and the formation of smoke prevented. Smoke once formed is incombustible at firebox temperatures, as the carbon, or soot, will only burn at a very high temperature.

Smoke may be formed, even at high temperatures, if there is not sufficient oxygen present to combine with the carbon as it is liberated; or it may form, when sufficient oxygen is present, if the temperature of the flame *is cooled below* the igniting temperature of the carbon before the oxygen comes into contact with it. The formation of smoke, due to an insufficient supply of air, may be shown by placing a chimney over a lamp flame and then closing either end. The function of a lamp chimney is to produce an upward draft of air, which is deflected against the flame and furnishes a supply of oxygen sufficient to consume all the carbon while it is at a white heat in the flame. If either end of the chinmey is wholly or partially stopped up, the flame will at once begin to smoke, because there is not sufficient oxygen coming in contact with it to burn all the carbon, which therefore passes off as soot or lampblack. As soon as the obstruction is taken from the end of the chimney, however, the current of air through it is resumed, and the smoke ceases.

An example of cooling the flame of a gas below the igniting temperature of the carbon, thereby causing it to smoke when an abundant supply of oxygen is at hand, may be furnished by placing a pan of cold water above the flame. The water will absorb heat from the flame so rapidly that the temperature of the flame will be reduced below the igniting temperature of the carbon, which will consequently pass off unconsumed as soot.

PREVENTION OF SMOKE.

62. Carbon, in a gaseous state, before it is liberated from the hydrocarbon gases of the coal, is invisible; but, after the hydrocarbons have been broken up by the heat and the carbon is liberated, it appears in the solid form as black soot, and forms smoke. The formation of smoke, therefore, can be *prevented* in two ways: (1) by completely burning all the carbon as it is liberated from the hydrocarbons, so that none will escape in the solid form as soot; or (2) by preventing the carbon from being liberated, allowing it to pass off in the invisible gaseous state.

1. All the carbon can be burned if sufficient oxygen is brought in contact with it as it is liberated, and at the igniting temperature. This is the proper method of preventing the formation of smoke, and it will be found very efficient if the coal is fired in small quantities. For instance, if only small charges of coal are fired at a time, and at regular intervals, smoke will be almost entirely prevented.

2. By lowering the temperature of the firebox below the igniting temperature of the hydrocarbons, these will pass off unburned without liberating the carbon, and, consequently, without forming smoke. This is a very expensive method of preventing smoke, however, as the hydrocarbons furnish almost one-third the heat of the coal, which heat, in this method, is wasted. A good firebrick arch, properly constructed and applied, assists very materially in the prevention of smoke.

It will be seen from what has preceded that smoke is a sure indication of imperfect combustion, and consequently of a waste of fuel, but that the *absence* of smoke does not always indicate complete combustion. Generally speaking, the absence

of smoke indicates complete combustion; yet it is possible for the combustion to be incomplete without smoke being formed.

It is not practicable to entirely prevent smoke at all times, as, in order to do so, an excess of air must be supplied which will be more wasteful than if a little smoke were allowed to form.

FIRING.

PREPARATION OF BITUMINOUS COAL.

63. The **preparation** of bituminous coal for firing has considerable influence on the completeness and rapidity of its combustion, and, consequently, on the temperature attained in the firebox, and on the prevention of smoke. The rapidity with which a lump of coal will burn depends, among other things, on the amount of surface it presents to the action of the oxygen in the air; therefore, if the lump is broken into a number of small pieces, it will present a much greater surface, will burn much faster, and will create a much higher temperature with the same quantity of coal on the grates.

Other advantages are that the smaller coal can be spread more evenly over the fire, a thinner fire can be maintained, and the thickness of the fire can be regulated more regularly for the proper admission of air through the grates, thereby securing a higher and more even temperature in all parts of the firebox, and also a better combustion of the fuel.

The coal should be broken up to about the bulk of a 3- or 4-inch cube, or, say, the size of a man's fist, depending on the hardness of the coal. Very soft coal crumbles and ignites quickly when exposed to heat, harder coal does not crumble, and burns more slowly. If the supply in the tender contains much fine coal, such as would be liable to drop through the grates or be drawn through the tubes by the strong draft, it should be wetted just enough to insure its staying in the firebox until it has caked and burned. As little water as possible should be used for this purpose, however, as it all has to be converted into steam in the firebox, and, since the heat necessary for this evaporation must be drawn from the fire, its

evaporation tends to reduce the temperature in the firebox, besides wasting heat in the steam vapor as it escapes through the stack. Of course, in frosty weather it may not be practicable to wet the coal.

SYSTEMS OF FIRING.

64. General Considerations.—A locomotive fireman should always strive to attain two objects while at work, the more important of which is to generate steam fast enough to maintain steam pressure under all conditions, in order that running time may be made; the other is to generate this steam economically and with the least consumption of coal. Economy in the use of coal is of great importance, but in railroad service, where the running time is about as fast as can be made, or on occasions when the engine is loaded to its utmost capacity, the chief aim should be to generate steam as fast as it is required, regardless of whether it is done economically or not, and without the emission of smoke. There are always plenty of opportunities for practicing economy in the consumption of coal, and such opportunities should not be neglected.

There are two systems in use for firing locomotive boilers: one is called the *coking*, or *banking*, system, and the other, the *spreading* system.

65. Coking System.—In this system of firing, the fresh coal is piled up in the back end of the firebox, where it is gradually heated until the gases are driven off. The thickness of the coal on the grate slopes, or decreases, toward the front end, where a moderately thin, brightly burning fire is kept for the combustion of the coal after it has been coked. Air for the combustion of the coke in the front end of the firebox is supplied through the grates. The gases liberated from the pile of coal in the back end of the firebox rise up and mix with air that is admitted through small holes in the fire-door; they then mix and pass together over the hot fire in front, where the gases are burned. When all the gases have been distilled from the pile of coal in the back end, it is pushed forwards to be burned, and its place filled with fresh coal to be coked.

While this system is the more economical of the two, it does not make steam as rapidly as the spreading system, and for this reason it is not so generally used.

66. Spreading System.—This is the system generally used, on account of its making steam rapidly—a very important consideration in modern railroading.

A level, evenly distributed fire is carried, the thickness of which is regulated according to the work that the engine must perform. In putting on fresh coal, it is scattered evenly over the fire where needed, keeping the sides and corners near the sheets well covered. The firing is performed frequently, a small quantity of coal being put in at a time. The air necessary for combustion should be admitted both through the grates and above the fire. To obtain the best results with this system, the fire must be kept free from ashes and clinkers, and as thin as is consistent with the work to be performed.

HEAVY FIRING.

67. Heavy charges at long intervals are very wasteful, and should always be avoided. When fresh coal is thrown on a fire, it absorbs heat and has its temperature raised to a certain degree; its temperature remains constant at this point, but the coal still absorbs heat (the heat of gasification) until all the gases have been driven off. The first effect of putting coal on a fire, then, is to reduce the temperature in the firebox; the greater the quantity of coal to a charge, the greater will be this effect.

If a large quantity is fired at one time, it not only reduces the temperature in the firebox, but a great volume of gas is given off at a time when the temperature is reduced below the igniting temperature of the gases, and they thus pass away unconsumed. Then, again, the greater the volume of gases, the more difficult it is to properly mix them with air, and consequently the harder it is to effect complete combustion and prevent smoke. Reducing the temperature in the firebox has other bad effects, as it causes contraction to take place in the firebox sheets, which expand again when the fire becomes

intensely hot; this contraction and expansion results, in the course of time, in leaky tubes, cracked sheets, and broken staybolts.

These effects will be present in a much less degree when the coal is fired in smaller quantities, and for this reason it is desirable to fire only a small amount of coal at a time, but more frequently. The quantity of coal to be fired at a time will depend somewhat on its quality, on the cylinder capacity of the engine, and on the rate at which work is being done. As the quality of the coal or the rate of working is liable to change, the fireman must use good judgment in regulating the quantity of coal to a fire. No rule that will cover all conditions can be given, but, in general, the best results will be obtained by firing as small quantities as possible at a time, say, one or two shovelfuls, the firing being done at regular intervals, the length of which will depend on the conditions under which the work is being performed.

When firing, the fire-door should be closed after each shovelful, and it is good practice to keep it closed a few moments, both in order to give the exhaust a proper action on the fire, and so that the temperature in the firebox will have time to recover from the effect of the last opening, before the door is again opened. Every shovelful of coal should be scattered so as to spread over the surface of the fire, where needed, as evenly as possible, and the sides and corners should be kept well covered. If shovelfuls of coal are thrown on the fire in heaps, they will burn slowly, like so many individual chunks of coal, besides acting as a blanket at that spot, the result being that clinkers are formed and the engine steams poorly.

FORMATION OF CLINKER.

68. Ashes are the incombustible substances of the coal that remain after the combustible parts have been burned. If the ashes are allowed to accumulate and are subjected to a high temperature, they melt and run together, forming what is known as **clinker.** An excessive amount of sulphur or iron pyrites is sure to cause clinker, unless the fire is very carefully

handled. Coal cannot be called pure just because it does not clinker, for this fact may be due to excessive impurities that prevent it making a fire sufficiently hot to melt the ash, although the composition of the ash may be such that were it in otherwise pure coal it would melt readily. On the other hand, a coal may clinker because it is very pure, and therefore produces a very high temperature when it burns, thus readily reducing the ash to clinker.

If the coal is properly broken before it is fired, and the ashes prevented from accumulating, the danger of clinkers forming will be greatly decreased.

SHAKING THE GRATES.

69. The **rocking grates** that are used in soft-coal locomotives serve three important purposes: (1) they provide a means of admitting air for the combustion of the coal on the grates; (2) they permit the ashes to fall, or to be shaken into the ash-pan; and (3) they provide a means of breaking the clinker so that it will fall into the ash-pan and leave an unobstructed passage through which the air can enter. Used with intelligence, they enable the fireman to maintain a higher temperature in the firebox with less coal, as a result of which the engine will steam much more freely than it otherwise would.

The grates should be shaken with short quick jerks, as by so doing the clinker will be broken up; if a long slow rocking movement is used, the grates will not break the clinker. Shake the grates *lightly* and frequently enough to keep the fire clear of ash and clinker, but do not shake them so vigorously as to cause holes in the fire. This can best be prevented by shaking the grates after a fresh fire has been put in, and when the exhaust is light. If the grates are shaken when the exhaust is sharp, the violent draft through the fire is very liable not only to tear holes in it, but to pick up small pieces of coal in the firebox and carry them into the tubes, or up out of the stack. This not only wastes coal, but also causes a shower of sparks to be thrown from the stack, which is liable to cause fires along the road.

WHEN TO FIRE.

70. The ideal way to perform the firing is when the steam pressure is high and rising, and when the exhaust is light. If fresh coal is put on the fire when the steam pressure is falling, it will make the pressure fall all the more rapidly, because the fresh coal reduces the firebox temperature by absorbing heat. If coal must be fired when the steam is falling, break it up very fine and scatter it over the fire a little at a time. If coal is put in while the exhaust is making a violent draft through the firebox, the fine coal will be drawn through the tubes without even touching the fire on the grates. Of course, it is often necessary to fire when the exhaust is extremely sharp, but, as far as possible, plan the firing so as to avoid doing so. In other words, prepare the fire beforehand for heavy work, so that it will not be necessary to fire as frequently at such times.

Before starting a train, the thickness of the fire and its condition should be such that it will keep up steam pressure while the train is being brought up to speed. While working up to speed, steam has to be made very rapidly. If, therefore, the firing is done at such times, the consequent admission of cold air lowers the temperature in the firebox, as does also the presence of the fresh coal; and it must be borne in mind that a reduction in temperature means a loss in steam pressure.

If possible, prepare the fire beforehand for any sharp piece of work that the engine may be called on to perform, in which case the firebox door can remain closed until the draft through the fire is lighter. Every time the firebox door is opened, a great volume of cold air rushes in above the fire and through the tubes, cooling both. Also, the amount of air through the fire becomes less, in consequence of which the fire burns less rapidly, and the temperature is still further reduced. Opening the firebox door, then, *should be avoided as much as possible,* especially when it is necessary to make steam rapidly.

71. Preparing for a Grade.—If there is a long heavy grade, on which it is necessary to burn large quantities of coal, the thickness of the fire should be increased by light, frequent

firing, so that by the time the foot of the grade is reached a good clean fire of the proper thickness may be burning and in shape for rapid steam making. While on the grade, as few shovelfuls as possible should be scattered over the fire (where needed) each time a fire is put in, and an interval of time should be allowed between each shovelful and its successor. It is always best to fire small quantities at a time and to renew the fire often, when rapid steam making is required, even though it may take up more of the fireman's time to do so. He will be fully repaid for his labor by the better time made and the saving of coal effected.

72. Firing in Stations.—As smoke is always objectionable, especially on passenger trains and when standing at stations, the last fire before entering a station should be put in at such a distance therefrom that all the gases will have been driven off before the train arrives there.

If necessary to put in a fire while at the station, the coal should be well broken up and fired in small quantities and at frequent intervals, the blower being put on just sufficiently to prevent smoke. It may be necessary to open the firebox door a little, also, until the gases have been consumed.

On many roads, the fireman's duties include looking out for signals while approaching and at stations. This being a safety precaution, takes precedence over the firing and must of course be attended to.

GOOD FIRING.

73. Soft Coal.—To be successful as a locomotive fireman, good judgment and intelligence must be combined with careful management. The fireman must determine by experience the thickness of fire to carry; the amount of air necessary to give the best results and the manner in which it should be admitted; the quantity of coal to fire at a time and the frequency of firing; and also when to fire and when to shake the grates. In fact, there is a constant call for the exercise of good judgment, and it is only by the utmost diligence and careful observation that the fireman can hope to attain success.

Rules for his guidance can, at best, only cover ordinary conditions, and while he should use them as a basis from which to work, he should change them so that they conform to the conditions under which he is working.

The following are a few instructions on firing, which, if used intelligently, will give very satisfactory results:

1. Break the coal into small lumps before firing—about the size of a 3-inch cube.

2. If possible, have the fire in such condition before starting a train that it will keep up steam pressure without additional fuel being supplied while the train is being brought to speed; by so doing, the necessity of opening the fire-door while the draft through the firebox is strong will be avoided.

3. Keep the grates, tubes, and ash-pan clean, thus securing good draft and aiding the combustion of the fuel.

4. Avoid heavy charges. Fire frequently, but use small quantities at a time, closing the fire-door for a few moments after each shovelful. Scatter the coal over the surface of the fire where needed, and keep the sides and corners well covered. Watch to see that no holes form in the fire.

5. Shake the grates lightly and often enough to keep them free from ashes and clinkers; shake them just after a fire has been put in and when the exhaust is light.

6. If clinkers form, remove them at the first opportunity.

7. Keep the firebox door open as short a time as possible.

8. Keep a good hot fire while the injector is working.

9. Carry on the firing in such a way as to maintain as constant a steam pressure as possible. The pressure, even when the management is of the best, may perhaps vary *gradually* a small amount either side of the standard, but if it changes *rapidly* (either rising or falling), it indicates carelessness or poor judgment on the part of the fireman or engineer, and the fault, whatever it may be, should be corrected.

To prevent the engine **popping,** increase the boiler feed and close the dampers, or use the heaters to heat the feedwater in the tank. If possible, do not open the fire-door, but if necessary, open it but slightly, or swing it back and forth until the danger of popping is averted. Experiment has demonstrated

that, as an average case, a quarter of a pound of coal is wasted every second that an engine is blowing off, to say nothing of the waste of water.

Of course, if running along the road, judgment should be exercised in the matter of turning on the heaters, for if the water is low in the tank, it may thereby be made too hot for the injectors to handle. The door, if opened, should only be set on the latch, or else the sheets and tubes will suffer.

74. Hard Coal.—The composition of *hard* coal differs from that of *soft* coal in that it contains more carbon and much less hydrogen; in consequence of this, but little gas is given off, and but little smoke generated during its combustion.

The admission of air above the fire is not of such importance as when soft coal is being burned. Generally, the size of the coal is such that fairly good combustion can be secured with the air admitted through the fire. If the size of the coal and the thickness of the fire is such that the supply of air is restricted, the combustion will be incomplete, the following taking place: The intense heat near the grates will cause the oxygen of the entering air to combine with the carbon of the coal and form carbon dioxide; but as this passes upwards it combines with another atom of carbon and forms carbon monoxide, which passes off unburned as an invisible gas, if the air supply is restricted.

Good judgment is required to properly regulate the thickness of the fire; with hard coal, the proper thickness depends on the size of the lumps and quality of coal to be burned. The larger the lumps, the thicker must be the fire carried, as otherwise the large openings between the lumps would permit such volumes of air to rush in as to make it impossible to keep up the steam pressure, besides chilling the sheets and tubes; in fact, if the fire were allowed to become very thin, the inrush of cold air would kill it. If the coal is of a tough and "bony" nature, it should be broken up to about the size of a man's head, and a thinner fire carried—but not thin enough to be torn into holes by the exhaust.

In short, in firing hard coal, care must constantly be exercised to keep the grate near the sheets well covered, and to prevent the formation of large air passages through the fire, as the admission of too much air has a great tendency to reduce the temperature in the firebox below the igniting temperature of the coal. The secret of success as a hard-coal fireman is to constantly watch for and prevent the formation of spots through which large quantities of air can pass.

LOCOMOTIVE BOILERS.

(PART 2.)

BOILER ATTACHMENTS.

1. We shall now consider the various fittings and appliances that are common to all locomotive boilers as at present constructed, and which may be grouped under the head of **boiler attachments.**

Some of them are strictly essential; for example, a means of determining the height of water in the boiler, and also the degree of steam pressure therein; an apparatus for renewing the supply of water in the boiler; a means of lubricating the various working parts, etc. Less strictly necessary, but altogether desirable in present-day practice, are such appliances as sight-feed lubricators, bell ringers, sand blast, etc. In a great many cases the cars of the train are heated by steam drawn from the boiler of the locomotive, the flow therefrom and the regulation of the pressure being controlled by the engineer by means of certain valves placed in the cab.

As occasion arises, in this and subsequent Sections, each of the attachments mentioned above will be taken up and described in detail, both the attachment itself and also its method of working being considered.

GAUGES.

GAUGE-COCKS AND WATER GAUGE.

2. Height of Water.—It is imperative that some means be provided whereby the height of water in the boiler can be determined at any time, and for this reason every boiler is fitted with **gauge-cocks,** and, in most instances, a *glass water gauge,*

For notice of copyright, see page immediately following the title page.

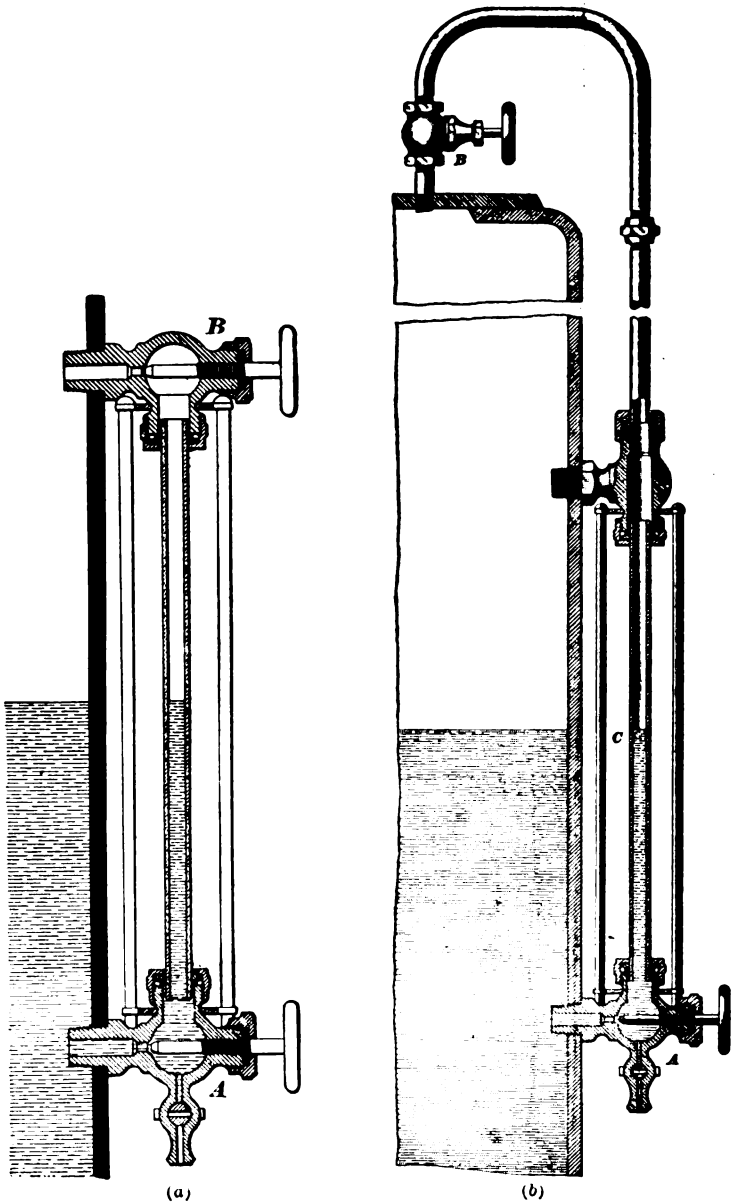

FIG. 1.

also. The gauge-cocks are made of brass, and are generally three in number, although four are sometimes used. The center of the lowest gauge-cock is usually placed 3 inches above the highest point of the crown sheet, although on some engines it is placed from 4 to 6 inches above the highest point. Whatever its position, it is intended to mark the lowest advisable water level; the water, therefore, should never be allowed to drop below the lowest gauge-cock. The upper gauge-cock is placed just a little above the intended water level, and the middle cock midway between the two. This brings the gauge-cocks from $2\frac{1}{2}$ to 4 inches apart. The water level should not be carried high enough for the upper cock to discharge water, nor so low that steam will be discharged through the lowest cock. By means of the gauge-cocks, then, it is possible to locate the water level approximately. For example, if the middle cock blows water and the upper one steam, it indicates that there are more than two gauges of water but less than three; if it blows steam and the lowest cock blows water, there is more than one gauge but less than two; if the lowest cock blows steam, there is less than one gauge; while, if the upper cock blows water, there are more than three gauges. Gauge-cocks, however, will not tell us how much less than one gauge there is, nor how much more than three, nor just where the water stands between gauges; all this is the duty of the glass water gauge.

3. Water Gauge.—As shown in Fig. 1 (*a*), the **water gauge** consists of two elbow valves *A* and *B*, communicating with each other by means of the glass tube *C*. This tube is usually $\frac{5}{8}$ inch outside diameter, $\frac{1}{8}$ inch thick, and from 10 to 15 inches long; steam-tight joints are made between glass and metal by means of rubber gaskets. On some engines the lower valve *A* is so placed that the bottom of the glass is at the same height as the center of the lowest gauge-cock; in other cases, it is from 1 to 3 inches below that point. The best practice is to use a glass of such a length that it will indicate water levels both above the highest and below the lowest gauge-cocks, provided the length required is not so great that the glass will break too readily. With such a gauge, the exact level is known

at which the water threatens to expose the crown sheet or to flood the cylinders; and knowing the exact water level, the engineer can act with better judgment in an emergency. The gauge glass, therefore, should be of such a length, and so placed, that the upper end of the glass will be at least 2 or 3 inches above the upper gauge-cock, and the lower end of the glass 2 or 3 inches below the lowest. The valve *B* then communicates with the steam space of the boiler, while the lower valve *A* communicates with the boiler below the water-line.

In the lower part of *A* is fitted a blow-off cock. When valves *A* and *B* are open, water flows in through the lower valve and assumes a position in the glass on a level with the surface of the water in the boiler, thus indicating its height. As long as the glass is in working condition, the water within it will keep playing up and down, due to variations of water level caused by the motion of the engine; if it ceases to fluctuate while the boiler is working, the glass should be examined at once.

Another type of water glass is shown in view (*b*), in which a copper tube is attached to the upper end at *C* and extends over on top of the boiler, where a globe valve *B* is located, which controls the admission of steam to the top end of the glass. This arrangement provides a supply of condensed water to the glass, which comes down the copper pipe with the steam, prevents the rapid corrosion of the upper end of the glass, and keeps the glass clean by causing a downward flow through it, thus making its action more certain.

4. Water Level.—The gauge glass will *indicate incorrectly* (1) if the upper valve is closed or is stopped up; (2) if the lower valve is closed or is stopped up with scale or mud; (3) if the upper valve is *partly* closed, or the opening *partly* stopped up, so as to obstruct the free flow of steam into the glass; (4) if the lower valve is *partly* closed or the opening *partly* stopped up with scale or mud, so as to obstruct the free flow of water into the glass. These four cases will now be considered separately.

1. If the upper valve is closed or is stopped up, the steam pressure will be shut off from above the water in the glass, and

the pressure on the water in the boiler will force sufficient water into the glass to fill it, and it will remain full regardless of the height of water in the boiler. To test for this defect, close the lower valve, and open the blow-off cock at the bottom of this valve. If the water runs out slowly and no steam escapes, it indicates that the passage in the upper valve is stopped up.

2. If the lower valve should accidentally be closed or become stopped up, the water level will not fluctuate in the glass, which will gradually fill up through condensation of the steam. To test for this, close the upper valve, open the blow-off cock, and let the water in the glass escape. If no water flows after the glass becomes empty, the lower valve is closed, or else stopped up.

3. The upper valve should always be opened wide enough to insure full boiler pressure on top of the water in the glass. Steam is constantly condensing in the glass, and, therefore, there must be a flow of steam into it to maintain the pressure. If the opening through the upper valve is so small as to throttle the steam (whether the contraction of the opening is due to mud or dirt, or to the valve being partly closed), the pressure of steam on the water in the glass will be less than boiler pressure, and the glass will indicate a higher water level than there really is in the boiler. For example, suppose the pressure in the glass .1 pound less than boiler pressure, what effect would it have on the water level in the glass? A column of water 1 inch high, at a temperature corresponding to a pressure of 160 pounds, exerts a pressure on its base of about .032 pound; therefore, for every .032 pound difference in the pressures existing in the glass and the boiler, respectively, the water level in the glass will rise 1 inch above that in the boiler. With a difference of .1 pound, the water level in the glass will rise $\frac{.1}{.032}$, or about 3 inches above the boiler water level. This might lead to serious results if the glass alone were relied on, as the latter might indicate more than a gauge of water when in reality the crown sheet was only barely covered.

4. The lower valve should always be open wide enough to insure a free circulation between the boiler and the glass.

Should the valve be partly closed or partly stopped up, the circulation will be restricted and the glass will not indicate correctly. The supply of condensed water entering the top of the glass will tend to raise the indicated water level.

5. Points to Be Remembered.—It should be remembered, then, that the gauge-cocks and the glass water gauge must be kept clean and in good working order; that, if the water level in the glass is not moving up and down when the engine is working, the glass is not operating properly; that the gauge glass alone should not be depended on, but the glass and gauge-cocks worked in conjunction; that if both the glass and the gauge-cocks become inoperative, the engine is unsafe to run until the gauge-cocks are in order again; that 2½ inches is the *least* depth of water on the crown sheet that is safe; that with less than one gauge, or with the water out of sight in the glass, it is very unsafe, as the exact water level is unknown; and that on an up grade the water level always rises in the gauge glass and descends when on a down grade Allowance should always be made for this effect of grade on the water level.

6. To Replace a Gauge Glass.—In case a gauge glass breaks, first close the lower and then the upper valve, to prevent the escape of water and steam. An old glass can be removed and a new one put in its place by unscrewing the packing nuts. In putting in a new glass, care must be taken not to screw the packing nuts too tight at first, as this is liable to so strain the glass as to cause it to break as soon as it is heated. Screw the nuts down gently at first, even if there is a little leakage for a time; the leaks can be attended to after the gauge has been in use a short time, without danger of breaking the glass. After replacing a glass, be sure to open *both* valves. Swabbing a glass out with glycerine will prevent it from becoming discolored.

STEAM GAUGE.

7. Its Duty.—The duty of the steam gauge is to indicate the pressure of steam in the boiler Locomotive gauges are usually of the Bourdon type; a form of this gauge is shown in

Fig. 2; the essential parts are a brass or copper tube *a* of elliptical section, bent in the form of a circle as shown, and the toothed quadrant *f* and small pinion *g*, by means of which the motion of the tube *a* is transmitted to the pointer *P*. The end *b* of the tube *a* is fastened into the casting *C*, and is held stationary; the other end is closed by a cap *d*, and is free to move. This cap is connected to the quadrant *f* by the rod *e*, the quadrant

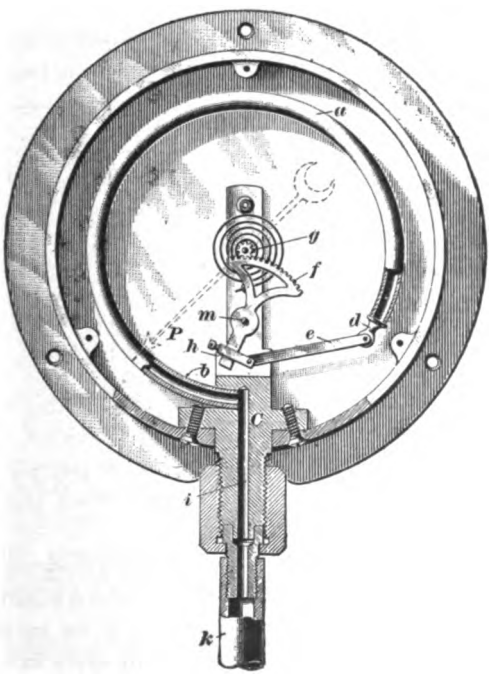

FIG. 2.

meshing with the pinion *g*. This pinion is fixed on the same spindle as the pointer *P*, and the quadrant *f* is pivoted at *m*; therefore, if the end of the tube at *d* moves, the movement will be transmitted to the pointer *P* through the rod *e*, quadrant *f*, and pinion *g*.

The boiler connection is made at *k*, and, when pressure is admitted to the gauge, it passes up *i* and enters tube *a*. This tube is elliptical in section, and the pressure tends to make it

circular, the result of this being that the tube straightens out somewhat, and the free end *d* moves outwards away from the stationary end *b*. This movement, in being transmitted to the gauge pointer, is multiplied by the mechanism used, so that a small movement at *d* makes the pointer move through a comparatively large space, thus facilitating the reading. The casting *C* is extended upwards, and the various working parts fitted to it; this arrangement not only gives better results than when the parts are fitted to the back of the case, but it also permits of the case being removed for the inspection or repairs of the inside parts.

8. Testing and Adjusting.—It is very important that the gauge should *indicate correctly*, and it ought therefore to be tested occasionally, and adjusted if required. To determine whether or not a gauge reads correctly, it may be compared with a gauge that is known to be correct, or it may be tested with a column of mercury. The error in a gauge may be constant at all pressures, reading too high or too low, as the case may be. For instance, the reading may be always just say, 4 pounds, too high or too low; or, on the other hand, the error may increase as the pressure increases, being, say, 2 pounds out when the gauge registers 10 pounds, 4 pounds out when it registers 20 pounds, 6 pounds when registering 30, and so on.

If the amount of error is the same at all pressures, the gauge may be made to indicate correctly by giving a slight *set* to the tube, by altering the position of the scale, or by moving the pointer on its spindle. If the amount of error varies with an increase of pressure, it may be remedied by altering the ratio of multiplication of the mechanism, that is, by changing the position of the adjustable connection *h* with respect to the pivot *m*.

9. Gauge Pipe.—The pipe that connects the gauge to the boiler should be bent in such a way as to prevent the steam from coming in contact with the tube *a*, as it has been found that the high temperature of the steam injures the tube. If the pipe is bent as in Fig. 3 (*a*) or (*b*), the bent portion will fill up with comparatively cool water condensed from the steam.

The part of the pipe above the bend being then also filled with the condensed water, the tube will be protected from the extreme heat, which affects the indications of the gauge.

10. Gauge Pressure.—The pressure recorded by a steam gauge is not the actual pressure exerted by the steam on the inside of the boiler, but only the amount by which it exceeds the atmospheric pressure; the pressure thus registered on the gauge is spoken of as the **gauge pressure.** The true, or **absolute,** pressure, as it is called, can be found by adding the pressure of the atmosphere, about 14.7 pounds per square inch, to the gauge pressure. Thus, the absolute pressure is equal to the gauge pressure + 14.7; so that when the gauge shows 160 pounds, the steam inside is really exerting a pressure of 174.7 pounds, 14.7 of which is counteracted by the pressure of the atmosphere on the outside of the boiler, thus leaving us a net pressure in boiler of 160 pounds.

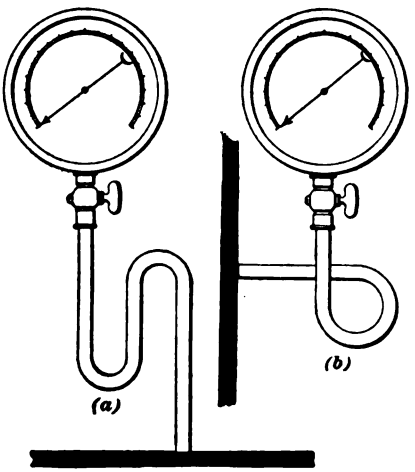

FIG. 3.

11. Weight of Atmosphere.—The statement has already been made that the atmosphere exerts a pressure, due to its weight, of about 14.7 pounds per square inch, and that it will consequently balance or support a column of mercury 30 inches high, or a column of water 34 feet high. This may readily be seen by taking a glass tube about 32 inches long, closed at one end, and filling it with mercury. Invert the tube, putting a finger over the open end, so as to prevent the mercury from running out, and place it in a cup of mercury, as shown in Fig. 4. The mercury in the tube will rise and fall a few times, and then come to rest at a height of about 30 inches

above the surface of the mercury in the cup. The atmosphere exerts an equal pressure upon every square inch of surface of the mercury in the cup, except upon that part of the surface occupied by the tube. This pressure is exerted in all directions, and, consequently, an upward pressure of 14.7 pounds per square inch is exerted on the mercury in the tube. A cubic inch of mercury weighs about .49 pound; an upward pressure, therefore, of 14.7 pounds would support $\frac{14.7}{.49}$, or 30, inches of mercury.

A column of water 1 inch square and 1 foot high weighs about .434 pound; if, therefore, a glass tube 35 feet long were filled with water and inverted in a manner similar to the mercury tube shown in Fig. 4, the upward pressure exerted by the atmosphere on the water in the tube would support a column of water $\frac{14.7}{434}$, or 34 feet high, nearly.

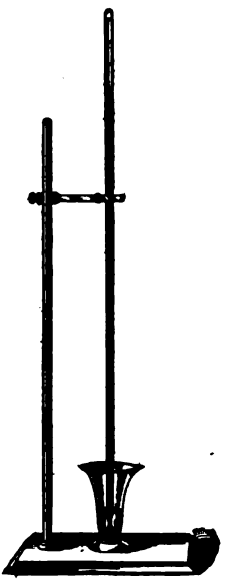

FIG. 4.

12. Vacuum.—The space between the upper end of the tube and the mercury, Fig. 4, is called a **vacuum**, a term used to imply that the space is entirely empty, and contains no substance whatever—solid, liquid, or gaseous. If there were a gas of any kind there, no matter how small the quantity might be, it would expand, fill the space, and exert a downward pressure on the top of the mercury that would cause the column to fall and become shorter, according to the amount of gas (or air) present. This space would then be called a **partial vacuum**, since it would not be entirely devoid of matter. Although the height to which a fluid such as water or mercury will stand or rise in a tube depends on the completeness of the vacuum therein, it must not be supposed that the vacuum "sucks up" or raises the fluid. It is the pressure of the

atmosphere on the surface of the fluid outside of the tube that forces it up into the tube and holds it there.

13. Measuring a Vacuum.—The general method of obtaining a vacuum is to pump the air out of a closed vessel by means of a vacuum pump; but a perfect vacuum can never be obtained by this means, although a close approach to it can be made. In fact, although an approximately perfect vacuum

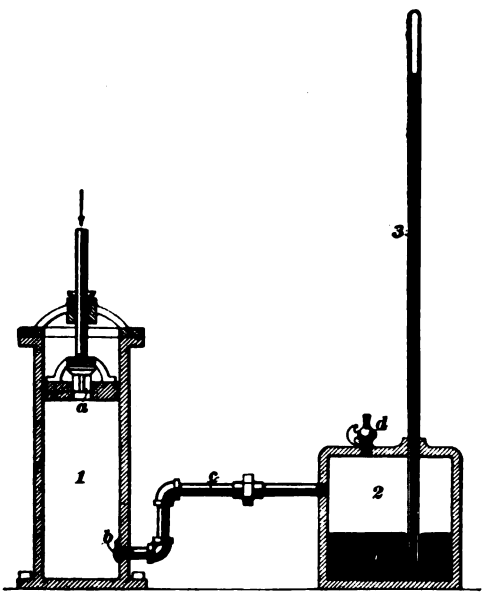

FIG. 5.

has been obtained by other means, yet a perfect vacuum has never been obtained, and probably never will be.

The amount of vacuum obtained in any vessel may be measured by means of a column of mercury, as will be explained with the aid of Fig. 5, in which *1* is a vacuum pump. This is very similar to a small force pump, the only difference being that in the vacuum pump the valves *a* and *b* are arranged on the opposite sides of the piston and cylinder wall to what they would be in a force pump. The exhaust pump communicates through pipe *c* with an air-tight vessel *2* that opens to the

atmosphere through the cock *d*. *3* is a glass tube more than 30 inches long and closed at one end, the same as in Fig. 4. This tube *3* has been filled with mercury, then inverted, and after that placed in the mercury *e*, as shown. Now, if the cock *d* is open, so that the vessel *2* is filled with air at atmospheric pressure, the pressure on top of the mercury will force the latter up the tube to a height of 30 inches. Suppose that the cock *d* is then closed, and part of the air pumped out of the vessel; the remaining air will exert less pressure on the mercury *e*, and, consequently, the column in the tube will fall down from 30 inches to a height corresponding to the pressure in the vessel. If still more air is pumped out, the height of the column will be lowered still more, and so on, until, if all the air were removed from vessel *2* and a perfect vacuum existed therein, the mercury in tube *3* would be on a level with the mercury *e*. To lower the mercury column from 30 to 29 inches, therefore, one-thirtieth of the pressure in the vessel must be removed; in other words, instead of having 30 inches of pressure* in the vessel there will only be 29 inches of pressure and 1 inch of vacuum. When the column stands at 25 inches there will be 25 inches of pressure and 5 inches of vacuum; when the column falls to 20 inches there will be 20 inches of pressure and 10 inches of vacuum, and so on. It will thus be seen that the amount of vacuum in the vessel is expressed as the number of inches the column has fallen from its maximum height, 30 inches. Thus, the expression "18 inches of vacuum" means that the column has fallen 18 inches, and, therefore, only stands 30 — 18, or 12, inches high. For 28 inches of vacuum, the column stands 30 — 28, or 2, inches high.

The usual method of measuring a vacuum, however, is by means of a **vacuum gauge**, the principle of operation of which is the same as that of the steam gauge. When the pointer of a vacuum gauge points to the figure 5 of the dial, it indicates 5 inches of vacuum, and so on for the other figures on the dial.

*By "an inch of pressure" is meant that pressure which will sustain a column of mercury 1 inch high.

SAFETY VALVES.

14. Boilers are provided with safety valves in order that the pressure may be relieved in case it rises above the standard amount. Locomotives are provided with two, and sometimes three, safety valves, so that in the event of one becoming inoperative the other will take care of the pressure. Ordinarily, these valves are set to blow off at about $2\frac{1}{2}$ pounds difference in pressure. The one set at the lowest pressure blows off first; if the pressure still raises, the second one will open and discharge an additional volume of steam.

CROSBY VALVE.

15. Description.—In Fig. 6 is shown the **Crosby safety valve.** Here the valve proper *A A* rests on the two annular flat seats *B B*, *C C*, being held down against the steam pressure by the spring *D*, the tension of which is regulated by screwing the bolt *E* in or out. The larger of the two seats *C C* is formed on the upper edge of the valve body, the smaller seat *B B* being formed on the upper edge of the cylindrical chamber *F*. This chamber connects with the shell or body of the valve by means of the hollow arms *G*, *G*, the passages *H*, *H* allowing the steam to escape to the atmosphere when the valve is open.

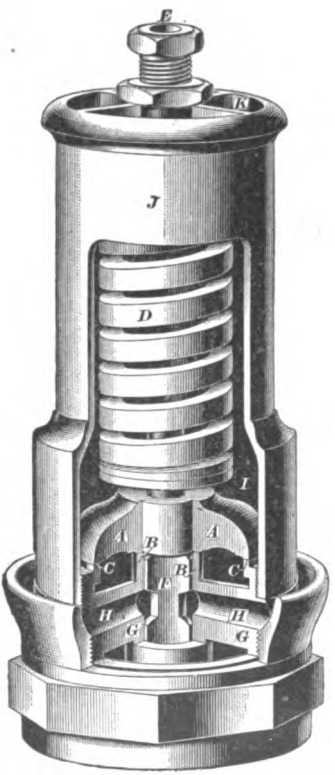

FIG. 6.

16. Action.—When the pressure under the valve is within a pound or so of the maximum allowable pressure, the valve lifts slightly and allows steam to escape past the seat *C C* into

the space *I* inside the casing *J*, and up through the holes *K* into the atmosphere. As the boiler pressure increases, the valve rises higher and steam flows into the chamber *F* faster than it can escape through the passages *H*, *H*, the pressure under the valve (inside the inner seat *B B*) thus quickly increasing. This additional pressure overcomes the increasing resistance of the spring and forces the valve wide open, quickly relieving the boiler.

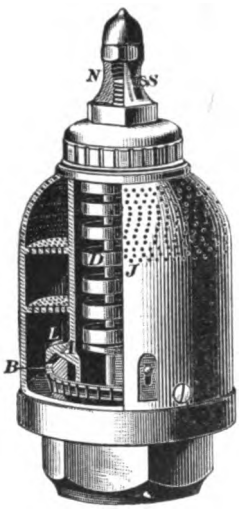

FIG. 7.

MEADY MUFFLED VALVE.

17. In Fig. 7 is shown a part-sectional view of the **Meady muffled valve.** The valve proper *A* projects upwards out of the perforated casing *J* and encloses the spring *D*, which keeps the valve on its seat *B* against the steam pressure. The outside surface *L* of the valve is always open to the atmosphere, thus avoiding back pressure on the valve when steam is blowing off. The design is such that when the valve opens, it rises to a greater height than is usual in the majority of safety valves. The escaping steam passes out through the perforated casing without making a violent noise; hence the term "muffled." The spring's tension is adjusted by means of the sleeve nut *N*, the setscrew *S* first being slacked back.

INJECTORS.

PRINCIPLES OF OPERATION.

18. General Remarks.—The **injector** is an apparatus for supplying water to steam boilers. It was invented in 1858 by an eminent French scientist, Henri Giffard, and was introduced into this country in 1860 by Wm. Sellers & Co., of Philadelphia, Pa.

On investigating the action of the injector, it will be found that dry steam at a given pressure enters the apparatus, passes

through several contracted passages, raises one or more check-valves, and then forces water into the boiler against a pressure equal to or greater than that which it had when beginning the operation. The steam, in forcing the water through the injector and into the boiler, gives up its heat and performs actual mechanical work as truly as though the steam acted on a piston and moved a pump plunger along with it. A current of any kind—be it steam, air, water, or other fluid—has a tendency to induce a movement, in the same direction, of any body with which it may come in contact. This mechanical principle underlies the action of the injector. The steam, moving with an extremely high velocity, imparts a portion of its velocity to the water, and gives it sufficient momentum to overcome a pressure even higher than the original pressure of the steam. Locomotive blowers, steam jets, siphons, ejectors, etc. are all operated on the same principle of induced flow. The steam enters the injector at a high temperature with a great velocity, and, by striking a cold mass of water, its heat and speed will both be reduced, at the same time condensing the steam. A great portion of the velocity of the steam is imparted to the water, giving the latter sufficient energy to throw open the check-valves and enter the boiler against high pressure.

19. Action of Injector.—The action of an injector can best be explained by referring to Fig. 8, which represents a conventional form of an injector. In the figure, *A* is the injector, *B* the boiler, *C* the water supply, *D* the steam pipe to the injector, *E* the water-supply pipe, *F* the delivery pipe, and *G* the boiler check-valve, which is to prevent the water in the boiler flowing back into the injector.

In the injector, *s* is the steam valve and *O* the overflow valve, from whence a passage leads to the overflow outlet *x*.

A lifting injector has two functions to perform: first, it must raise the water from the source of supply *C* into the injector; and second, it must force the water from the injector into the boiler. A non-lifting injector only has to force the water from the injector into the boiler, since it is always filled with water.

Raising the Water.—To raise the water the steam valve *s* is opened a small amount; this permits steam to flow out of the steam nozzle *a* into the tube *b*, from whence it passes out through the overflow valve *O* and overflow *x* to the atmosphere. The steam in flowing through the tube *b* and to the atmosphere carries with it some of the air from the water-supply pipe *E*, thus creating a partial vacuum there. As soon as sufficient vacuum is formed in the supply pipe, atmospheric pressure,

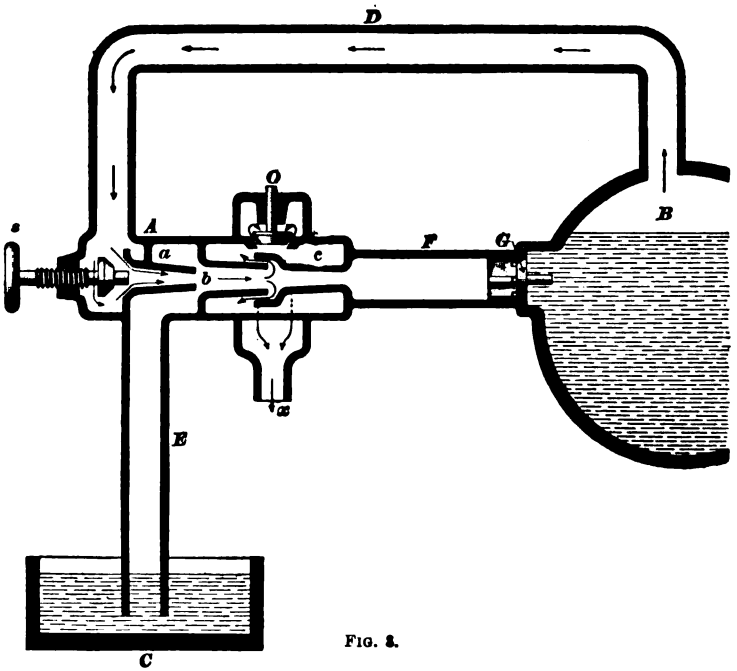

FIG. 8.

acting on the water in the tank *C*, forces water up into the injector, but as the water has not sufficient velocity to open the check-valve *G* against the pressure in the boiler, it passes out through the overflow valve. The injector is then said to be primed. The action of the steam jet in forming a vacuum in the supply pipe *E* is exactly the same as the action of the blower in creating a vacuum in the smokebox.

Forcing the Water.—When water appears at the overflow of the injector the steam valve is opened wide, which permits steam to pass through the injector in a much larger volume. This steam coming in contact with the stream of water that is flowing around the steam nozzle *a* into the tube *b*, forces the water along with increasing velocity and the water and steam enter the tube *c* together. Here the steam is condensed and forms a vacuum that imparts more energy to the feedwater, besides heating it. The steam in condensing in tube *c* forms a vacuum of about 24 inches, and it is this vacuum that then acts to raise the water. Since there is a vacuum below the overflow valve *O*, that valve is held on its seat by atmospheric pressure, and as the steam and water discharge into about 24 inches of vacuum, they enter the injector at an increased velocity, which results in a slightly greater final velocity of the water, which soon is sufficient to force the water into the boiler.

In starting an injector, the water enters it at such a low velocity that the water is unable to open the boiler check-valve, so it passes out of the overflow valve to the atmosphere. The water continues to flow out of the overflow until the steam has imparted sufficient velocity to the inflowing water to enable it to "form a jet" and force its way into the boiler.

20. Temperature of Water Delivered.—The temperature at which water will be delivered to the boiler depends on the steam pressure, and on the quantity of water being delivered per pound of steam, the feedwater temperature remaining constant. Thus, if an injector is worked at its maximum capacity, with a steam pressure of 30 pounds, the temperature of the water delivered to the boiler will be about 114° F.; if the pressure is 200 pounds, the temperature of the injected water will be about 154° F. The temperature of the water delivered will increase as the capacity of the injector is cut down from its maximum to its minimum. Thus, under 140 pounds steam pressure, and working at its maximum capacity, an injector may deliver water at about 135° F.; while, if the injector is cut down to its minimum capacity, the water will be

delivered at about 250° F. Under ordinary working conditions the water is probably delivered at a temperature between 160° and 200° F.

The highest temperature at which an injector will lift the feedwater decreases as the steam pressure under which the injector is working is increased. At low steam pressures, the injector may raise water at 125° or 130° F., while at 140 pounds and upwards, it is not safe to heat the water much above 110° F.

The number of pounds of water delivered per pound of steam decreases as the steam pressure is increased. At 30 pounds steam pressure, an injector may deliver from 20 to 25 pounds of water per pound of steam, while at 140 pounds pressure, it will deliver only about 13 pounds, and at 180 only about 11 pounds.

21. Classes of Injectors.—Injectors are divided into two classes: non-lifting and lifting. A **non-lifting injector** must be placed below the level of the tank bottom, so that the water will flow into it by virtue of its own weight, after which it will force the water into the boiler. A **lifting injector** raises the water to the injector, and then forces it into the boiler. The lifting injector is the one most commonly used on locomotives in the United States.

The majority of non-lifting injectors are not provided with what is called a priming jet, but simply with a forcing jet that drives the water into the boiler, it having flowed into the injector by gravity, as mentioned above. The point of overflow is usually at the level of the injector body, and the overflow valve must be closed when the injector is not working. Sometimes the injector is provided with a combined overflow valve and heater cock, Fig. 9, connected by a pipe with the overflow space in the injector body, and placed in the cab within convenient reach of the engineer or fireman. This injector can thus be used as a heater, in the same manner as a lifting injector; also, the overflow is in sight of the men in the cab, which is not ordinarily the case with other types of injectors.

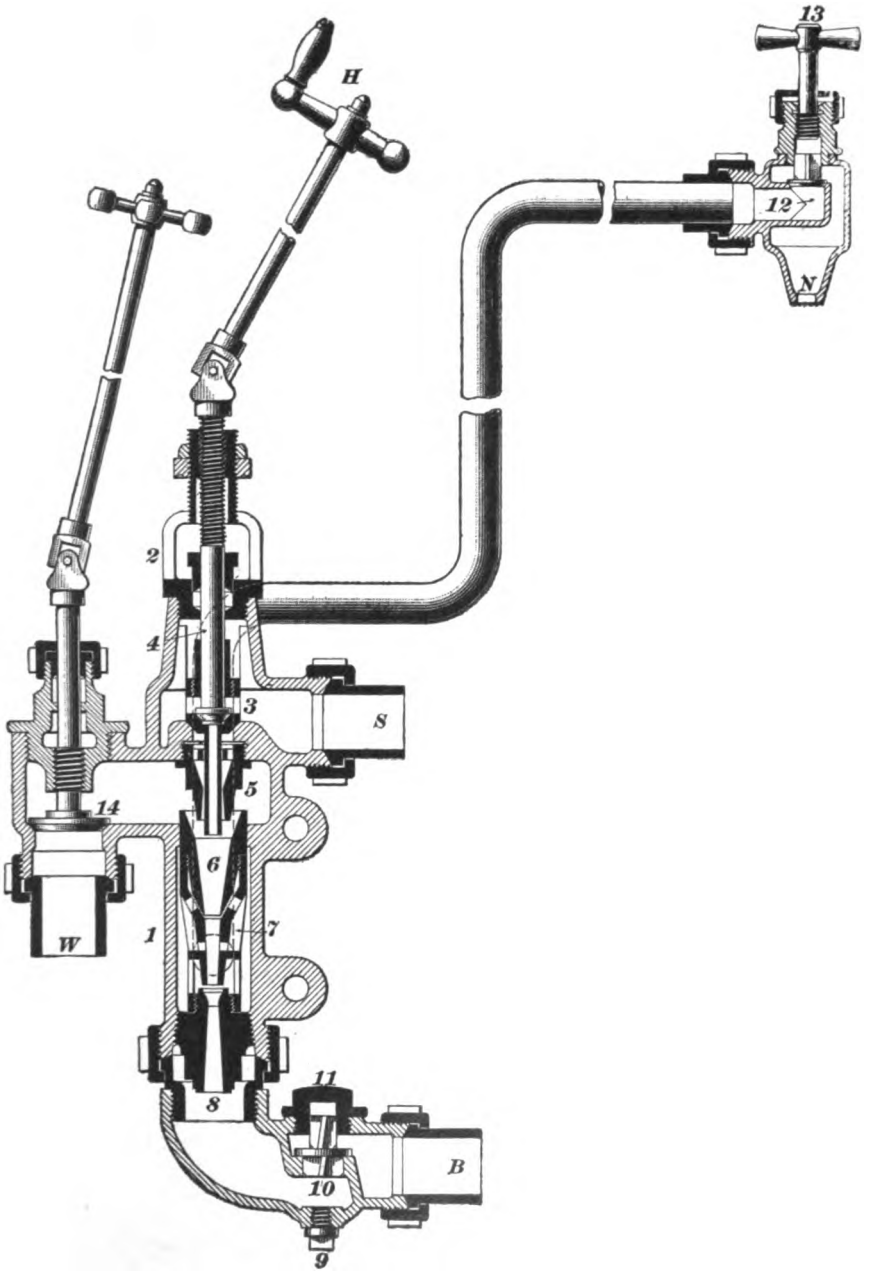

FIG. 9.

NATHAN NON-LIFTING INJECTOR.

22. Description.—Fig. 9 illustrates a recent improved form of non-lifting injector; it is known as the **Nathan M** type. It is provided with a water-regulating valve, and it also has a priming jet and a steam valve within the body of the injector itself. The injector overflow valve is not contained within the body of the injector, but is usually placed in a convenient position inside the engine cab, and high enough so as to be above the highest level of the water in the tender. It is connected with the overflow chamber in the injector body by means of a pipe. By placing the overflow valve in the cab, it is under the direct observation of the enginemen, who can then see whether the injector is wasting water at the overflow, and easily open or close it at will; hence, this injector can be used as a heater as readily as can a lifting injector. By placing the overflow valve above the highest level of the water in the tender, loss of water is prevented while the injector is not working, and the overflow valve need not be closed unless the injector is used as a heater.

In the following illustrations of the various types of injectors, certain parts (the check-valve, overflow valve, etc.) that are common to all will be denoted by the same numerals or letters throughout.

Referring to Fig. 9, *1* is the body of the injector; *2*, the yoke; *3*, the priming valve and nozzle; *4*, the steam valve; *5*, the steam nozzle; *6*, the intermediate nozzle; *7*, the condensing nozzle; *8*, the delivery nozzle; *9*, the drain plug, usually a petcock; *10*, the line check-valve, and *11* its cap; *12*, the overflow valve; *13*, the overflow-valve handle; *14*, the water valve; and *N*, the overflow nozzle.

Water connection from the tender is made at *W* and steam connection from the boiler at *S*. *B* is the pipe delivering water to the boiler. *H* is the handle for regulating the steam supply; the water supply is also regulated by a similar handle, as shown.

23. Method of Working.—When first starting this injector, see that the tank valve is wide open and then open the

water valve *14* by means of the extension handle in cab. Open this valve about one full turn, and then the steam valve *4* a quarter-turn; this will raise the steam valve off its seat in the priming valve *3* and allow steam to pass into the priming valve through the holes here shown, and then down through the nozzle of the priming valve. The steam, as it issues from the priming nozzle, is condensed by the incoming water, imparting to the latter sufficient velocity to carry the stream of water and condensed steam through nozzles *6* and *7* and out through overflow pipe (shown dotted); and so up to and out of the overflow valve *12*. As soon as water appears at the overflow, open the steam valve *4* still wider, which will lift the priming valve *3* off its seat and allow steam to pass out through the large opening thus made, and down through the steam nozzle *5*. This will give the water a still greater velocity, enabling it to raise the check-valve *10* and pass on into the boiler. Regulate the quantity of water supplied by means of water valve *14*.

To stop the injector, close the steam valve, leaving the water valve as it is—ready for the next starting up of the injector. This will keep the injector body full of water and prevent scale accumulating on the nozzles.

To use as a heater, close the overflow valve *12* by turning handle *13* to the right, and then open the steam valve slightly. At all other times, handle *13* should be wide open. In very cold weather, the plug *9* may be replaced by a drain cock, for the purpose of keeping the injector and overflow pipe free of water when not in service. In such a case, the tank valve must of course be kept closed.

LIFTING INJECTORS.

24. Every lifting injector consists of a lifting apparatus for raising the water, and a forcing apparatus for delivering the water to the boiler. To perform both functions, the injector must contain (1) a *steam nozzle*, through which the steam from the boiler enters the injector; (2) a *lifting tube*, by means of which a vacuum is formed in the suction pipe and the water raised; (3) a *combining-and-condensing tube*, in which the steam and water meet, and the steam is condensed and transmits its

energy to the stream of water; and (4) a *delivery tube*, in which the water attains its maximum velocity. These are considered the essential parts of a lifting injector. In some injectors, the lifting and the combining tubes are separate, while in others they are combined and form one tube, which is called the combining or condensing tube.

A number of different makes of lifting injectors, all operating on the same principle, are used on locomotives, the *Ohio*, *Sellers*, *Monitor*, *Mack*, and *Metropolitan* injectors being some of the principal ones. Some locomotives are equipped with the *inspirator*, an instrument that performs the same functions as a lifting injector.

OHIO INJECTOR.

25. Description.—The **Ohio injector** is shown in cross-section in Fig. 10, in which *1* is the back part, and *2* the front part, of the body of the injector; *3*, the delivery-end connection; *4*, the primer; *5*, the steam valve; *6*, the steam nozzle; *7*, the lifting tube; *8*, the combining tube; *9*, the delivery tube; *10*, the line check-valve; *11*, the stop-ring for limiting the travel of the check-valve; *12*, the overflow valve; *13*, the overflow-valve handle; *14*, the water valve; and *N*, the overflow nozzle. The steam pipe to the injector is connected at *S*, the water-supply pipe at *W*, and the pipe that delivers the water to the boiler at *B*. The overflow chamber *d* is connected with the overflow nozzle *N* by a passageway in the body of the injector, as shown dotted. A waste pipe with a funnel on the end is brought up under the nozzle *N*, and carries away the waste water from the overflow.

26. Method of Working.—To start the injector, open water valve *14*, pull the lever *H* back far enough to just open the steam valve *5* slightly, and, when water appears at the overflow, pull the lever back as far as it will go. To stop the injector, close steam valve *5* by pushing the lever forwards. Regulate the water supply by means of the water valve *14*.

When steam valve *5* is opened slightly in starting the injector, steam flows into the primer *4* through four small holes *a*,

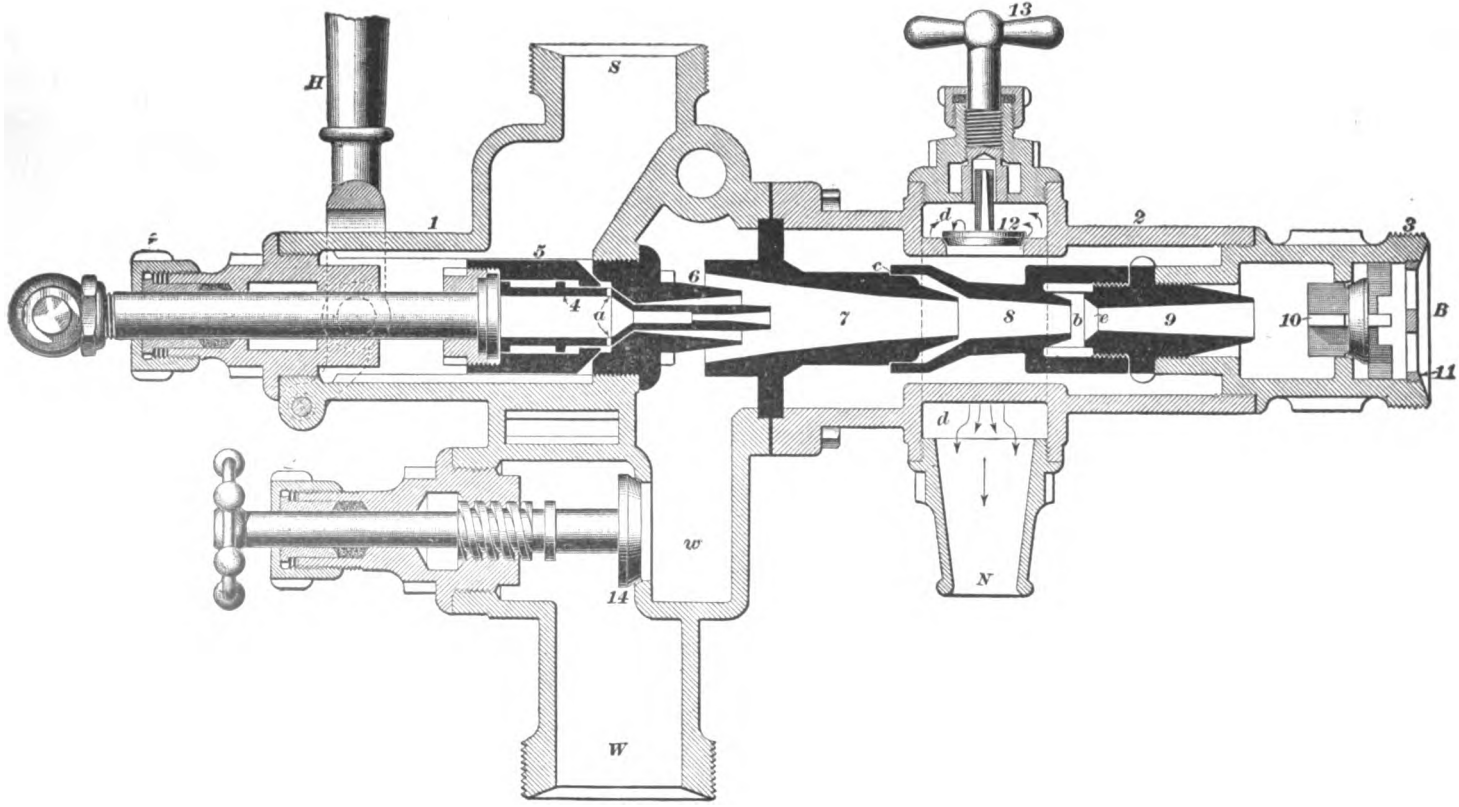

FIG. 10

expands, and pushes the primer forwards until it rests on its seat in steam nozzle *6*. The steam then flows out through the primer *4* into the lifting tube *7*, where it expands, filling the tube and creating a partial vacuum in chamber *w* and supply pipe *W* by carrying the air out with it as it passes through the tube and out of the overflow. As soon as sufficient vacuum is formed in the supply pipe, atmospheric pressure, acting on the water in the tank, forces water up into the injector; but as the water lacks sufficient velocity to open the boiler check-valve against boiler pressure, it passes out through the overflow. The steam valve *5* is then opened wide, which withdraws the primer from its seat and permits steam to issue in much larger volume through the large orifice of the steam nozzle *6*. The steam then comes in contact with the annular stream of water that is flowing around the steam nozzle *6* into the lifting tube, the water is forced along with increasing velocity by the steam, and the water and steam enter the combining tube *8* together, where the steam is condensed, forming a vacuum there and imparting more energy to, and also heating, the feedwater. As the steam condenses in the combining tube, it forms a vacuum of about 24 inches, and it is this vacuum that then acts to raise the water. The overflow valve is now held on its seat by atmospheric pressure, and, as the steam is discharging into about 24 inches of vacuum, it enters the injector at an increased velocity, which results in a slightly greater final velocity of the water. The shape of the tubes also tends to increase the velocity of the water.

In starting the injector, then, the water enters the injector at such a low velocity that it is unable to open the boiler check-valve; so it passes out of the combining tube through openings (or spills) *b* and annular space *c*, thence through the overflow valve *12* and the overflow nozzle *N*. This continues until the steam has imparted sufficient velocity to the inflowing water to enable it to "form the jet" and force its way into the boiler.

To use as a heater, close the overflow valve *12* by means of handle *13* and open steam valve *5* slightly; steam will then enter the injector, and force its way back into the tank, if the water valve *14* is open. This action may be quickened by

slightly closing the water valve *14* until the jet is formed, when it may be opened the proper amount for regulating the supply of water.

The overflow valve of a single-tube injector should always be left open, except when the injector is being used as a heater.

27. Tubes.—Both the lifting and the combining tubes are bored out tapering, and placed with their smaller end towards the delivery tube. The delivery tube also is bored out tapering, but its small end *e* is placed next to the condensing tube. Now, the same quantity of water that flows through the large end of the tube *7* in a unit of time must flow through the small end *e* of the delivery tube in the same length of time. To do this, the velocity of the water as it passes through *e* must be considerably greater than when it was flowing through tube *7*. A common example of this principle is to be seen in a running stream of water: where the stream is wide, the current or flow may be slow and sluggish; where the stream is narrow, the water flows faster, and rapids are formed. The same quantity of water that flows into the wide part of the stream flows out through the narrow part, for, if it did not, the narrows would act as a dam and raise the level of the water.

28. Capacity.—The capacity of an injector depends mainly on the diameter *e* of the delivery tube; the distinguishing number of the injector expresses the size of this diameter in millimeters. Thus, in a No. 6 injector the diameter *e* would be 6 millimeters, while in a No. 9 injector it would be 9 millimeters. A millimeter is .03937 inch in length, or nearly $\frac{1}{25}$ of an inch.

SELLERS INJECTOR.

29. Description.—A sectional view of the **Sellers Injector** is given in Fig. 11(*a*), in which *1* is the delivery tube; *2*, the combining tube; *3*, the steam nozzle; and *4*, the primer or lifter steam nozzle. Steam connection is made at *S*, and water connection at *W*, *B* being the delivery pipe to the boiler.

30. Method of Working.—To start the injector, the lever *H* is pulled backwards sufficiently to move valve *a* from

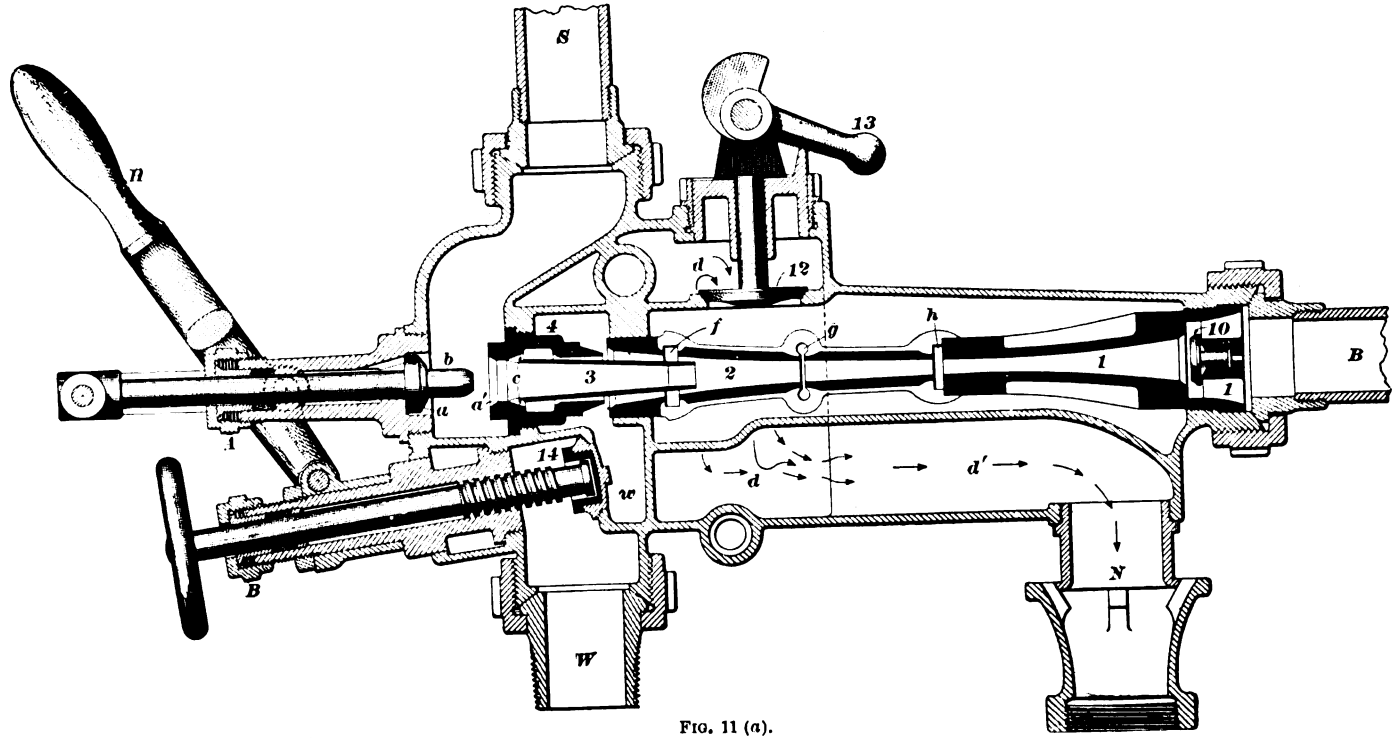

FIG. 11 (a).

its seat *a'*. This permits steam to flow into the lifter steam nozzle through the openings *c*, but the stem *b* still closes the end of the steam nozzle *3* and prevents steam from flowing through it. After issuing from the primer *4*, the steam enters the combining tube *2*, and escapes from the tubes through the openings *f*, *g*, and *h*. It then passes through the overflow valve *12* into chamber *d*, and thence through a passageway into *d'* and out at the overflow *N*, creating a vacuum in the water-supply pipe *W*, which causes the water to rise up into the injector and pass out of the overflow. The lever *H* is then drawn all the way back, thus withdrawing the stem *b* from the steam nozzle *3*. This allows a larger volume of steam to pass through the steam nozzle into the combining tube, where it comes in contact with the water, which it heats, and by which it is condensed; it at the same time imparts sufficient velocity to the water to enable it to open the check-valve *10* and the boiler check, and feed into the boiler. If, for any reason, the injector "breaks," the steam issuing from the steam nozzle *3* will escape so freely through the openings *f*, *g*, and *h* as not to seriously interfere with the operation of the lifter steam nozzle *4*, which, consequently, tends to maintain a vacuum in the water-supply pipe; thus the injector will again lift and force the water into the boiler as soon as the cause of its breaking is removed.

To use as a heater, close the overflow valve *12* by turning the lever *13* up, open the water valve *14*, and also the steam valve *a*.

When an injector is working with a high steam pressure, after the jet is formed, and all the water that enters the mouth of the combining tube *2* is passing into the boiler, more water can be drawn in through the openings *g* and *h* and pass into the boiler through the delivery tube *1*. The action of the stream of water passing the openings *g* and *h* draws this water in; some is also taken in at *f*, a vacuum is created in the chamber around the tubes so that the overflow valve is held on its seat by the outside air trying to get into this vacuum. Hence, it follows that if a supply of water can be furnished to this chamber, it will increase the capacity of the injector.

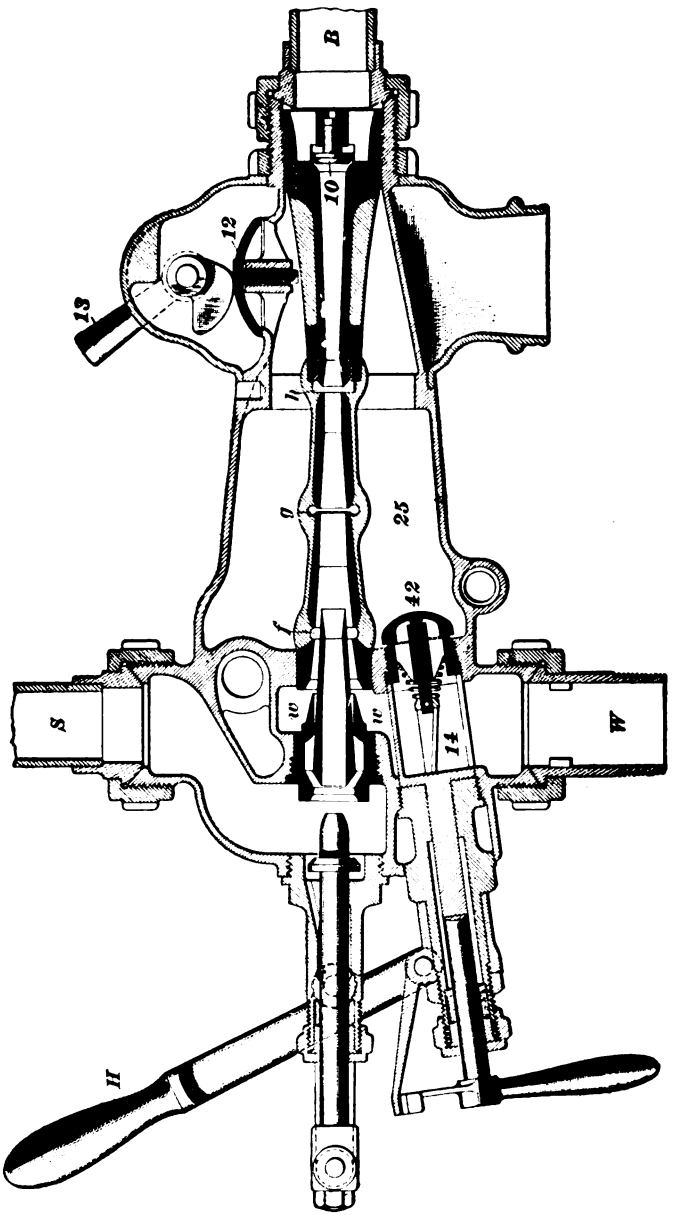

Fig. 11 (b).

Fig. 11 (*b*) shows an improved type of the Sellers injector, which has a by-pass valve *42* that allows water to flow from the suction pipe *W* into the chamber *25* around the tubes where it passes into the combining tube through the openings *g* and *h*, thus adding to the volume of the water passing into the boiler. This valve *42* is held on its seat by a spring, so that when priming the injector, or in case it "breaks," the steam and water will not pass back into the suction pipe. As soon as the injector is working and a vacuum is produced in the chamber *25*, the valve will be lifted from its seat against the tension of the spring. In other respects this type operates exactly like the one shown in Fig. 11 (*a*).

MONITOR INJECTOR.

31. Description.—In Fig. 12 is illustrated the latest type of the **Monitor injector** in section, showing the arrangement of the nozzles and other parts. *1* and *2* are the front and the back parts, respectively, of the body of the injector; *3*, the lifter valve; *4*, the lifter steam nozzle; *5*, the steam valve; *6*, the steam nozzle; *7*, the lifting tube; *8*, the condensing tube; *9*, the delivery tube; *10*, the line check-valve; *S*, the steam connection; *W*, the water connection; and *B*, the delivery to boiler.

32. Method of Working.—To start the injector, open the water valve *14*, and pull back the lever *H* a short distance, to raise the water; after it appears at the overflow *N*, draw the lever back steadily until the overflow ceases.

When the lever is first pulled back a little, to raise the water, the lifting valve *3* is unseated, and steam flows through the lifting nozzle *4* and tube *7* and out of the overflow, raising the water into the injector. The lever is then pulled all the way back, which causes the nut *n* to unseat the steam valve *5* and pull back the lifter nozzle *4*. Sufficient steam then enters the tubes through the large steam nozzle *6* to impart the necessary velocity to the water.

To use as a heater, close the overflow valve *12* and open the steam valve *5* and the water valve *14*.

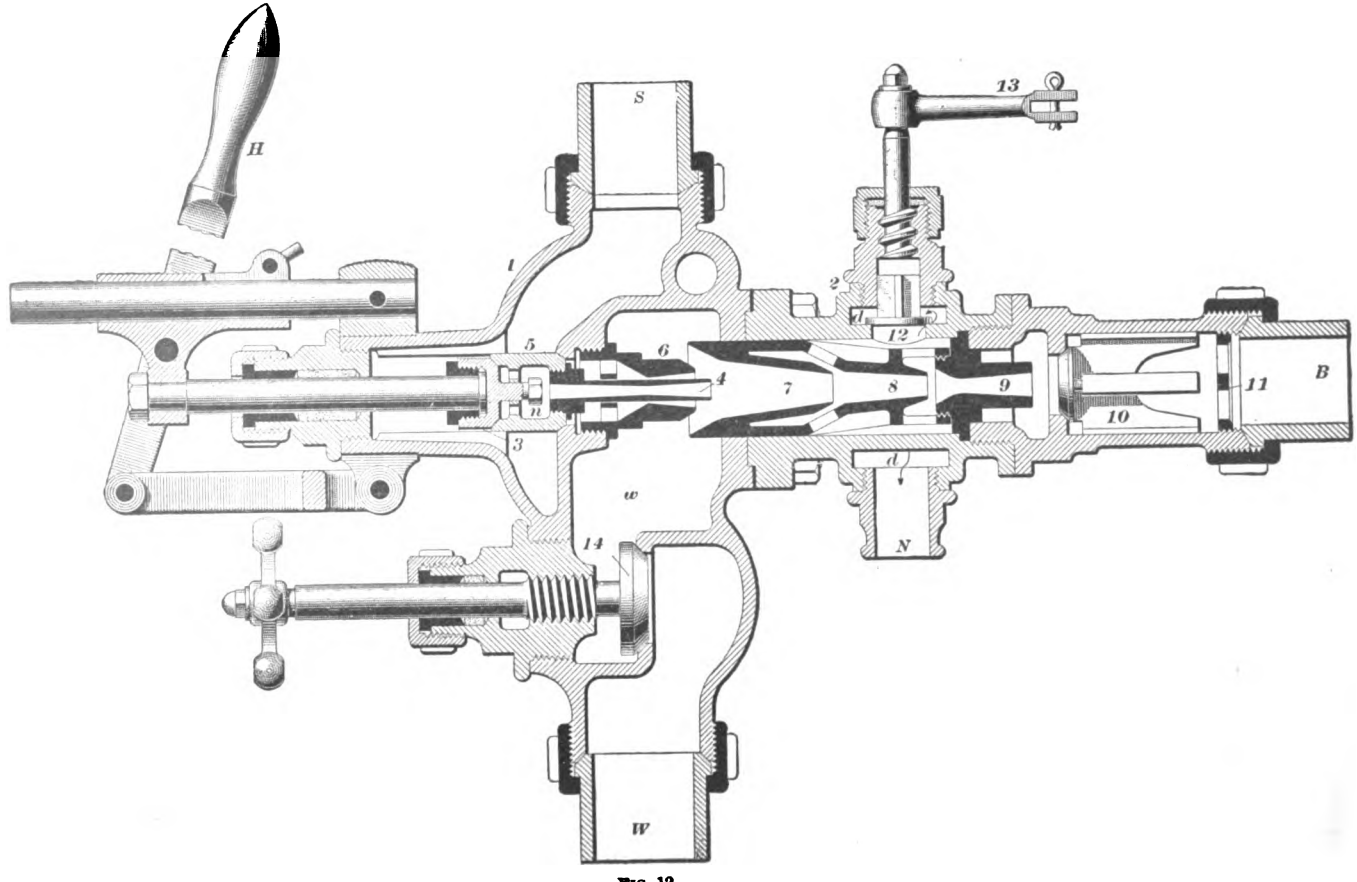

FIG. 12

A new type of the Nathan injector, called the *Simplex*, has a by-pass valve that admits water from the suction pipe *W* into the chamber around the tube *8*. This device is somewhat different in detail from the one illustrated in Fig. 11 (*b*), but it handles the water in the same manner. A cock that can be turned with a wrench to a closed position is used to prevent the water passing back into the suction in case the automatic valve is disabled.

MACK INJECTOR.

33. Description.—The arrangement of the tubes, nozzles, and valves of a **Mack injector** is shown in section in Fig. 13, view (*a*), view (*b*) illustrating the lifter steam nozzle *1* separately.

This lifter nozzle serves not only as the primer tube but also as the steam valve for the forcing nozzle. *2* is the forcing steam nozzle; the screw handle *H* operates the lifter steam valve *3* and the steam valve and primer; *4* is the combining tube and *5* the delivery tube.

34. Method of Working.—To start the injector, open the water valve *14*; then open the steam valve *3* a little, to lift the water, giving the screw handle about a quarter-turn. When water shows at the overflow, continue to open the steam valve until the overflow ceases. The steam valve should not be opened farther after the overflow stops. When the handle *H* is given a quarter-turn, it unseats lifter steam valve *3*, as shown, and steam passes through the small ports *a*, view (*b*), and out through the lifter tube into the combining tube *4*, from whence it passes to the overflow nozzle, raising the water. When the handle *H* is again turned it pulls the primer *1* backwards, unseating the steam valve at *s*; steam then flows through *s*, the passages *c*, view (*b*), and out of the steam nozzle *2*, forcing the water into the boiler. The water supply is regulated by the water valve *14*.

To use as a heater, close the overflow valve *12*, and open the steam valve *1* and water valve *14*.

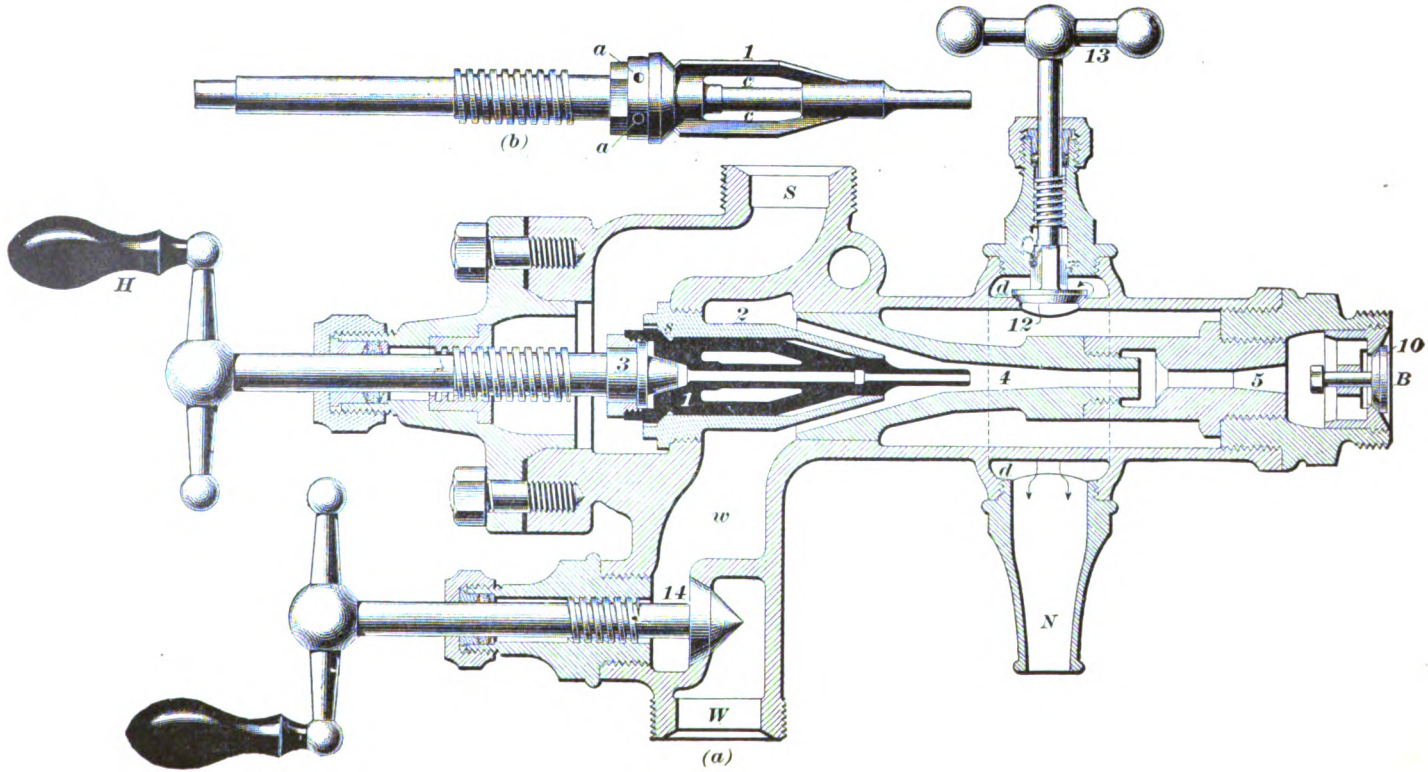

FIG. 18.

METROPOLITAN INJECTOR.

35. Description.—In Fig. 14 is shown a sectional view of the **Metropolitan injector,** a type that differs considerably from the others here shown, it being what is known as a **double-tube** injector. It contains two sets of tubes—a *lifting set* and a *forcing set,* the former of which lifts the water up through the suction pipe and delivers it to the forcing set under pressure, this latter set then forcing the water into the boiler.

In the figure, *1* is the lifting jet; *2*, the lifting combining tube; *3*, the forcing jet; *4*, the forcing combining tube; *5*, the steam valve; *6*, the auxiliary steam valve; *10* is the check-valve, and *11* its cap; *12* is the intermediate, and *13* the final, overflow valve; *14* and *15* are the overflow valve stem and lever, respectively; *S* is the steam connection; *W*, the water connection; and *N*, the overflow.

The sectional view here presented has been taken in two vertical planes, so as to show the arrangements of the various tubes, and also the overflow centerpiece, with its levers, valves, etc., these latter being situated on one side of the main body of the injector, and therefore in front of the tubes *2* and *4*, as viewed in the figure. It will be noticed that the parts of these tubes that lie behind the overflow portion of the injector are indicated by dotted lines.

36. Method of Working.—To start the injector, pull lever *H* back slightly, until the resistance of the steam valve *5* is felt. This allows steam that has come in through holes *a*, *a* of the steam valve to pass by auxiliary valve *6* and flow around to the lifting jet *1*, as shown by arrows *x*. The lifting valve being now opened slightly by means of wheel *G*, allows steam to flow through *1* into the lifting combining tube *2*, and lift the water up through pipe *W*. The water passes through tube *2* and fills the chamber *A*, as shown by the arrows *y*. When the water is lifting properly (the overflow having closed), pull lever *H* back steadily as far as it will go. The steam then coming through valve *5* and tube *3* carries the water through the forcing combining tube *4*, *4* and on through check-valve *10* into the boiler, as shown by the arrows.

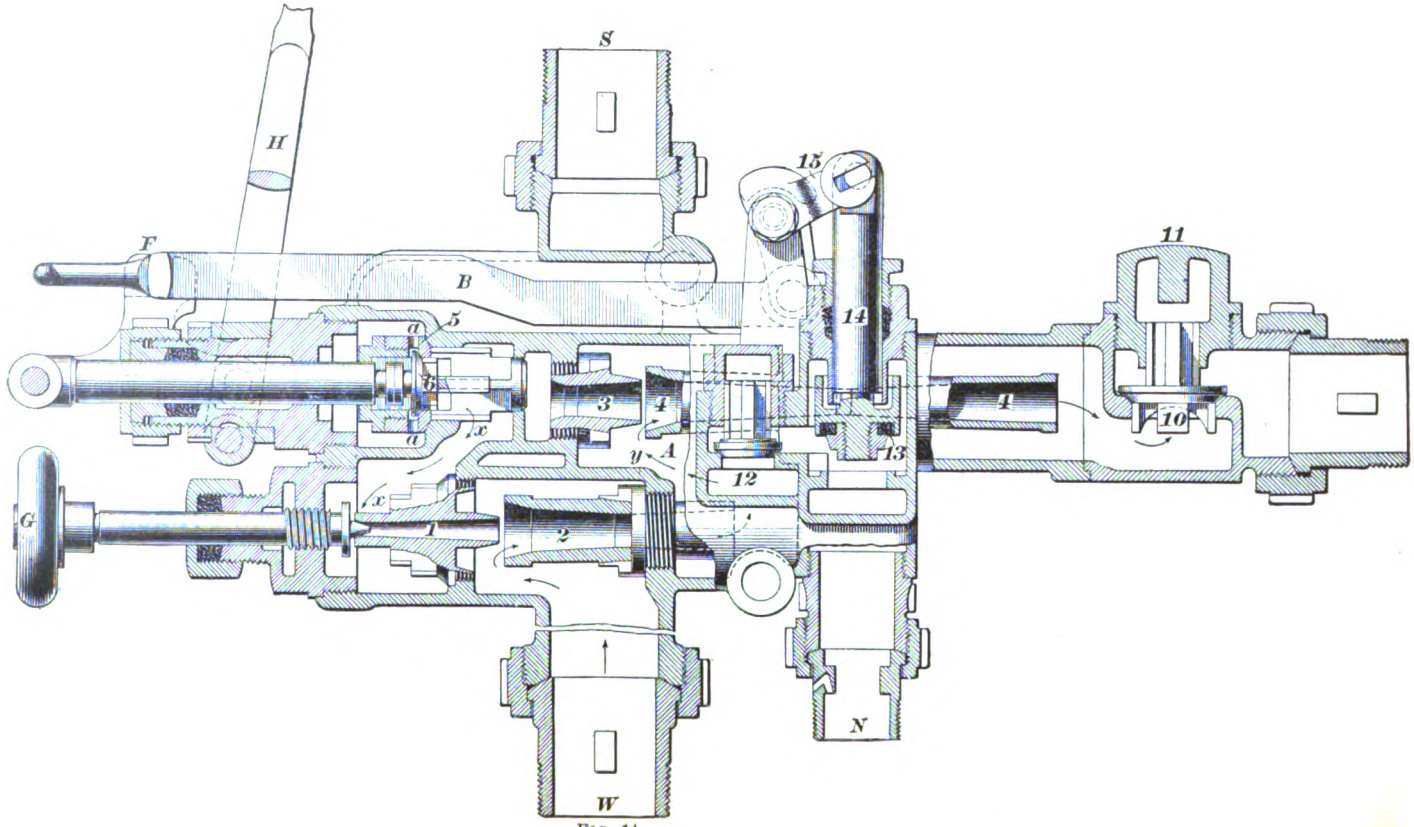

FIG. 14

The lever *H* must not be pushed in at all with a view to regulating the feed, but must be pulled clear out. The feed is regulated by the wheel *G*: to increase the delivery of the injector, turn this wheel to the left; to decrease it, turn the wheel to the right.

To use as a heater, close the overflow by disconnecting the bar *B* from its socket *F*, and pulling it (the bar) back. This will close the overflow valve *13*, and so prevent any overflow taking place out of the nozzle *N*. Then admit steam to the injector by pulling lever *H* back slightly.

HANCOCK INSPIRATOR.

37. Description.—An **inspirator,** or double-tube injector, consists of two parts, each of which is essentially a single injector. The first part, called the *lifter*, raises the water and delivers it to the second part under a head or pressure. The second part, the *forcer*, takes the water from the first part and forces it into the boiler.

Double injectors have this advantage over single injectors: they are more nearly self-regulating, since a rise in boiler pressure increases the flow of steam through the lifter and forcer in the same proportion. All double injectors are lifting injectors.

In Fig. 15 (*a*) is shown a sectional view of the latest form of **Hancock inspirator.** *1* is the lifter nozzle, and *2* the lifter tube; *3* is the forcer nozzle, and *4* the forcer tube; *5* is the lifter steam valve; *6*, the main steam valve, consisting of parts *a* and *b*; *7*, the intermediate overflow valve; *8*, the overflow valve; *10*, the check-valve; and *14*, the regulating valve. The inspirator should be so placed that the overflow nozzle *N* will be above the level of the water in the tank.

38. Method of Working.—To start the inspirator, the lever *H* is pulled back a short distance to lift the water, after which it is pulled all the way back, to force the water into the boiler. The quantity of water delivered is regulated by the valve *14*, the maximum quantity being delivered when the pin *p* on the wheel is at the top. The feed is reduced by turning the valve to the right. This valve takes the place of the water valve

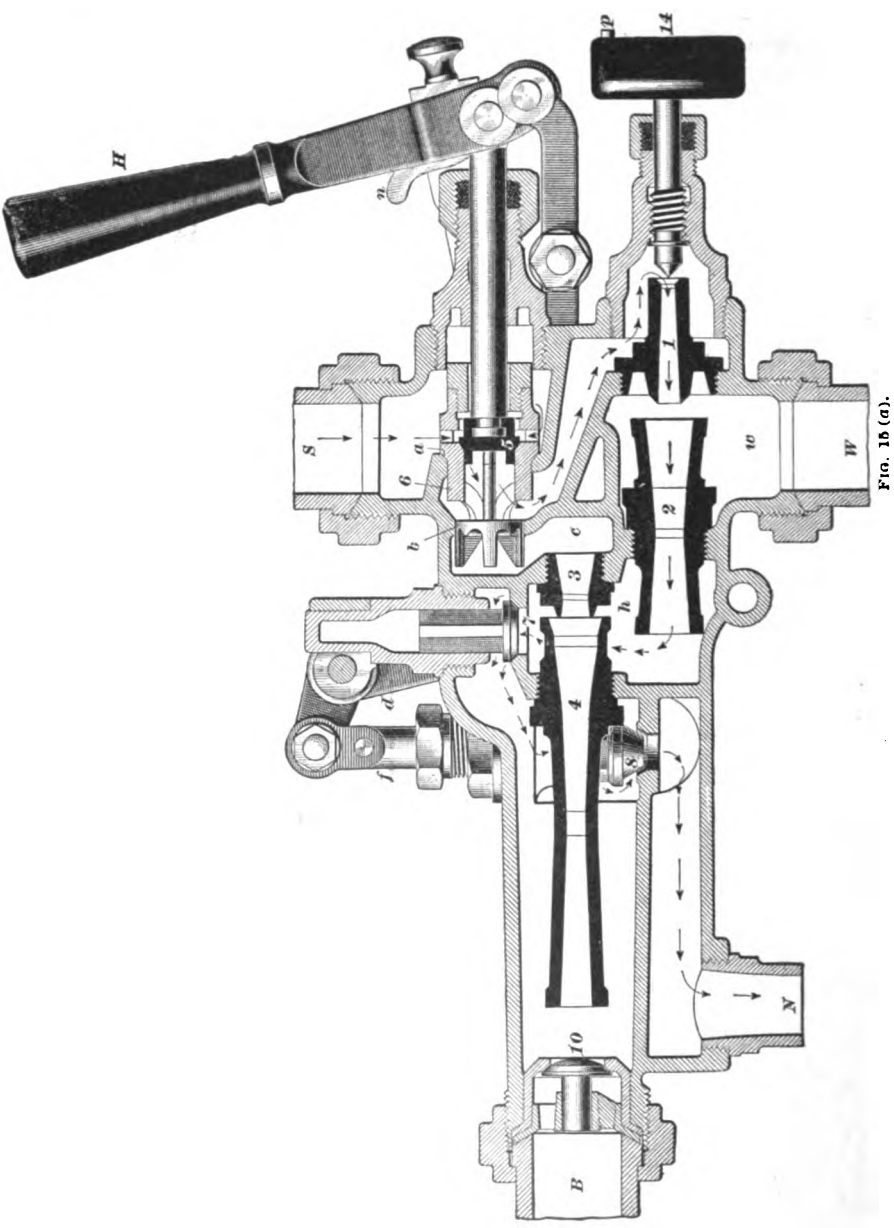

Fig. 15 (a).

in the supply pipe, and by means of it the rate of delivering water may be regulated from the maximum to the minimum amount without touching the lever *H*. When the lever is drawn back slightly to raise the water, the lifter steam valve *5* is drawn away from its seat on steam valve *6*; steam then flows from the boiler through pipe *S*, past valve *5*, through valve *6*, as shown by the arrows, and thence through the lifter steam nozzle *1*. The steam then passes through tube *2*, overflow valves *7* and *8*, and out of the nozzle *N*, creating a vacuum in *W* and raising the water, which at first flows out of the overflow nozzle also. The

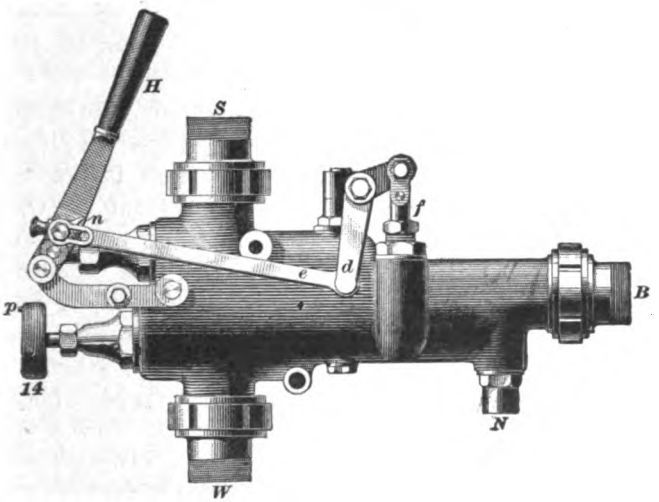

FIG. 15 (*b*).

lever *H* is then pulled back to its full extent, which opens the main valve *6* wide at both *a* and *b*, while at the same time it closes the overflow valve *8* [see Figs. 15 (*a*) and 15 (*b*)], and causes the water in chamber *h* to be put under pressure by the lifting apparatus. Steam then flows past valve *6* at *a* and *b* into chamber *c*, and through forcer steam nozzle *3* and combining tube *4*, where the steam is condensed by the water, which it heats, and to which it imparts sufficient velocity to force the boiler check *10* open. Fig. 15 (*b*) is a view of the inspirator from the other side, showing how the lever *H* is connected to the overflow valve *8* by connecting-rod *e*, bell-crank lever *d*, and

valve stem *f*. When the lever is pushed forwards to close the steam valve *6*, it operates the bell-crank lever and opens the overflow; when it is pulled back to open the steam valve, it closes the overflow. In order to prevent siphoning water through the overflow pipe when the injector is shut off, a small air hole is drilled in it.

To use as a heater, throw back the cam *n*, so as to disengage the connecting-rod from the lever, and then pull the connecting-rod back by hand to close the overflow; open the regulating valve *14*, and by means of the lever *H* regulate the quantity of steam to be used.

INJECTOR TROUBLES.

39. Conditions Assumed.—In discussing the difficulties that are often experienced in the working of injectors, it will be assumed at the outset that the injector itself is not unduly worn, but is in fairly good condition, and that the troubles experienced are brought about by other and various causes. Also, for present purposes, the suction pipe, hose, strainer, and boiler delivery pipe and check-valve will be regarded as parts of the injector, since a disorder in any of these affects the working of the injector itself. In searching for the cause of a trouble, therefore, the suction and delivery pipes should be carefully inspected as well as the injector.

40. Failure to Raise Water.—The causes which prevent an injector from raising water are:

1. *Suction Pipe Stopped Up.*—This may be due to a clogged strainer, collapsed hose lining, or to the pipe itself being stopped up at some point. This prevents water from coming through, and is the most frequent cause of an injector not priming.

In case the suction pipe is clogged, close the overflow valve, open the steam valve, and blow steam back through the pipe to force the obstruction out.

2. *Leaks in Suction Pipe.*—When this is the case, air enters and prevents the injector from forming the necessary vacuum required to raise the water. The remedy for this is obvious.

3. *Water in the Suction Pipe Too Hot.*—This may be due to a leaky steam valve in the injector, or to leaks in the boiler check and line check. The purpose of the line check-valve in the injector is to prevent the steam and hot water from flowing back into the injector, should the boiler check-valve leak.

The reason why hot water in the suction pipe affects the operation of the injector is as follows: The pressure at which water boils depends on the pressure to which it is subjected. It has been determined by experiment that water will boil at about 380° F., under a gauge pressure of 180 pounds per square inch; at 212° F., when subjected to an atmospheric pressure of about 14.7 pounds; and at about 160° F., when in 10 inches of vacuum. This shows us that decreasing the pressure on the water lowers its steaming temperature. Now, when the lifting jet of an injector is turned on, a vacuum is formed in the suction pipe; and, if the water there is at a temperature of 160° to 175° F., it gives off steam vapor, which fills the suction pipe and destroys the vacuum.

To start the injector priming under these conditions, turn on the priming jet, close the overflow valve just long enough for the steam to blow back into the suction pipe and force the hot water out into the tank, then quickly open the overflow valve; the cool water entering the suction pipe will then rise and pass out of the overflow.

4. *Obstruction in Tubes.*—There may be an obstruction in the lifting or combining tubes, or the spills (i. e., openings) in the tubes through which the steam and water escape to the overflow may be clogged up with dirt or lime. In either case, the free passage of the steam to the overflow will be interfered with, and, consequently, a steam pressure instead of a vacuum will be formed in the suction pipe, the extent of the pressure depending on the amount of obstruction.

41. Injector Primes, But Will Not Force.—In some cases an injector will lift water but will not force it into the boiler when the forcing steam valve is opened; or, it may force part into the boiler and the rest out of the overflow. When it

fails to force, the trouble may be due to one or other of the following causes:

1. *Choked Suction Pipe or Strainer; Partially Closed Tank Valve; Collapsed Hose Lining; a Kink in the Hose.*—If the suction pipe or the strainer is partially choked, or the tank valve is partially closed, or the hose lining collapsed, the injector will be prevented from lifting sufficient water to condense all the steam issuing from the forcer steam nozzle. The uncondensed steam, therefore, will gradually decrease the vacuum in the combining tube until it is reduced to about 7 or 8 inches, when the injector will break. (It is to be remembered that, when the injector is operating, it is the vacuum in the combining tube that causes the water to be raised.)

The remedy in case the tank valve is partially closed is, of course, to open it. In case of a choked suction pipe or a collapsed hose lining, convert the injector into a heater, and blow the obstruction out, as already explained. If the trouble is due to a collapsed hose lining and cannot be remedied by blowing steam back through it, it may be overcome by turning the hose end for end. The hose should have an easy curve from the tender connection to the suction pipe; if the hose kinks, it will choke the supply of water.

2. *Wasting at Overflow.*—This, in single-tube injectors, may be caused by either too great or too small a supply of water for the pressure of the steam. In the first case, the water will come out through the overflow only slightly warm; the remedy is to reduce the supply of water passing into the injector until the jet is formed. In the second case, the water will come from the overflow at a high temperature and mixed with steam; the remedy is to increase the supply of water or reduce the supply of steam until the jet forms.

3. *Suction Pipe Leaking.*—The leak may not be sufficient to entirely prevent the injector from lifting water, but the quantity lifted may be insufficient to condense all the steam, which therefore destroys the vacuum in the combining tube. Or, the water in the combining tube not being a solid stream will not be acted on by the steam properly and the jet will "break." With a restarting injector the jet will be formed again as soon

as the stream of water becomes solid again; with other types of injectors steam must be shut off and the injector restarted. A slight leak may exist that will simply cut down the capacity of the injector. In such a case, the injector will work noisily, on account of the overflow valve seating and unseating itself as the pressure in the combining tube varies, due to the leak.

To test for leaks in suction pipe, close the overflow valve, partly open the steam valve, and then close the tank valve sufficiently to produce a slight pressure in the suction pipe and hose. Any leaks there may be will then allow steam to escape, and they can therefore be located by a close inspection of the pipes and joints.

4. *Boiler Check-Valve Stuck.*—If completely closed, the injector will raise water but will not force it.

If the boiler check is partly open, the injector will force some of the water into the boiler, and the remainder out of the overflow, except in the case of a closed overflow injector, in which case the injector will break and steam will blow back into the tank. In case the check-valve cannot be opened wide, water may be saved by throttling both steam and water until the overflow diminishes, or, if possible, ceases. The steam should be throttled at the valve in the boiler steam connection, however, and not at the steam valve of the injector, as throttling tends to superheat the steam, and an injector will not work as satisfactorily with superheated steam as with saturated steam. By throttling the steam at the boiler, the excess of heat due to this throttling will be lost before the steam reaches the injector. *Saturated steam*, we may remark, is steam that contains just sufficient heat to maintain it in the state of steam, so that any loss of heat causes some of it to condense. *Superheated steam* is steam at any pressure that has a temperature higher than that of water from which it would be formed at that pressure. Superheated steam must lose all of its excess heat before it will begin to condense.

If the check-valve is stuck shut, it can sometimes be made to work again by tapping lightly on the cap, the bottom of the valve case, or the delivery pipe.

If the boiler check sticks open and the line check in the

injector does not prevent the water coming from the boiler when the injector is shut off, it can usually be reseated by tapping lightly on the cap, the bottom of the valve case, or the delivery pipe. This method can always be aided by pouring cold water over the check-case. If the check cannot be closed, close the overflow valve and water-regulating valve, when there is one, which will prevent the water from the boiler passing back through the injector. If the injector is not provided with a water-regulating valve, or if it is not water-tight, reduce the pressure of steam in the boiler, disconnect the hose from the feedpipe, drive a wooden plug into the end of the feedpipe, connect up the hose to the feedpipe to hold the plug in, and supply the boiler with the other injector.

5. *Obstruction in Delivery Tube.*—Any obstruction in the delivery tube, such as cotton waste, scale, or coal, will cause a heavy waste of water from the overflow. To remedy this, the tube will probably have to be removed and cleaned.

6. *Leaky Overflow Valve.*—This diminishes the capacity of a closed overflow injector by allowing water to escape and will cause the injector to break. With an automatic overflow injector, it allows air to be drawn into the injector, and, if the leak is sufficiently great, it will destroy the vacuum in the combining tube and prevent the injector from operating. As this air passes into the boiler, a leaky overflow valve is indicated by the boiler check chattering on its seat. To remedy this defect, grind the valve on its seat until it forms a tight joint.

7. *Tank Air-Tight.*—If the tank becomes air-tight, by freezing or otherwise, so that air cannot enter as fast as the water is withdrawn by the injector, the air entrapped in the tank will expand as the water is withdrawn, and the pressure exerted by it will therefore be lessened. After a time, the pressure of air in the tank will not be sufficient to force water into the injector, and the latter will break and refuse to lift again. The remedy for this is to always keep open communication between tank and atmosphere.

8. *Injector Choked With Lime.*—It is essential to the proper working of an injector that the interior of the tubes should be

perfectly smooth and of the proper bore. As, in course of time, they "lime up," the capacity of the injector decreases until finally it refuses to work at all. If the water used is very bad, it becomes necessary to frequently cleanse the tubes of the accumulated lime. This may be accomplished by putting the parts in an acid bath, allowing the acid to remove the scale. The bath should consist of 1 part of muriatic acid to 10 parts of water; the tubes should be removed from it as soon as the gas bubbles cease to be given off. The acid combines with the lime and forms a gas, and as long as there is lime to combine with, it will not attack the metal of the tubes. After the lime has all combined, however, the acid will attack the tubes, with the result that the inner surface will become pitted and rough, which will affect the working of the injector.

Should a tube become loose in an injector, it will seriously interfere with its operation, and in most cases will entirely prevent its working; therefore, where tubes are replaced, care should be taken to screw them firmly to their proper position.

If the tubes of an injector are worn out of shape, or new ones of an improper size put in, the injector will not work.

SIGHT-FEED LUBRICATORS.

GENERAL REMARKS.

42. The first *up-drop* lubricator was introduced in 1885, and the first double *sight-feed* lubricator in 1886, while the triple sight-feed lubricator made its appearance in 1888. Up-drop lubricators are so named from the fact that the oil on its way to the oil pipes flows upwards, drop by drop, through the water in the feed-tubes. A **sight-feed lubricator** is one in which the feed-tubes through which the drops of oil pass upwards are of glass. This permits the operator to see how the oil is feeding, and he can count the drops and adjust the feed until the lubricator delivers the proper number of drops per minute. A **double** sight-feed lubricator consists really of two single sight-feed lubricators combined in one, as a matter of convenience, while a **triple** sight-feed lubricator consists of a

combination of three single lubricators. A double sight-feed lubricator furnishes and regulates the supply of oil to the two cylinders of the engine. A triple sight-feed lubricator furnishes and controls the lubrication for both cylinders of the engine and for the steam cylinder of the air pump. Since the double and triple lubricators consist, respectively, of two and of three separate ones combined, or, in other words, since each feed is connected with its separate oiler, it follows that the feeds may be worked either singly, two at a time, or all together, without affecting the operation of any one feed.

PRINCIPLE OF OPERATION.

43. The principle on which the sight-feed lubricator operates can best be explained by reference to Fig. 16, which represents a conventional form of lubricator. *R* is an oil reservoir, and *A* a chamber above it, communicating with the boiler through the steam connection *S*. Into this chamber, called a **condenser,** steam enters, and part of it is condensed, maintaining the chamber filled with water up to a certain level, as shown. A tube *w* connects the condenser with the bottom part of reservoir *R*. The feed-glass *f* is in communication with the oil reservoir through chamber *b* and passages *p* and *h*.

The chamber *a*, situated above the glass *f*, communicates with the steam space *A* through a tube *e* called an **equalizing tube.** The pipe *T* leads to the steam chest of the engine. The water in *A* flows down into the reservoir *R* through the pipe *w*; and as the oil in chamber *R* is the lighter of the two, it floats on the water. Boiler pressure is exerted on the water in *A*, and is transmitted through the water in tube *w* to the water in *R*, and so to the oil, as shown by the arrows. The total pressure acting upwards on the oil is therefore equal to the pressure of the steam plus the pressure due to the head of water in the condenser. These two pressures are acting to force the oil down through passages *h* and *p* into *b*, as shown by arrows. Steam pressure is also exerted on the water in chamber *a*, where it acts downwards and resists the lifting effect of the

steam (already mentioned) on the body of water in *a*. It will be seen that while steam in *A* is tending to force water down the tube *w* and so raise its level in *R* and transmit its pressure through *R*, *h*, *p*, *b*, and *f*, to that in *a*, steam of the same pressure in *e* is acting to keep the water in *a* down. So that as far as the steam pressures are concerned, the whole body of liquid (water and oil) tends to remain motionless.

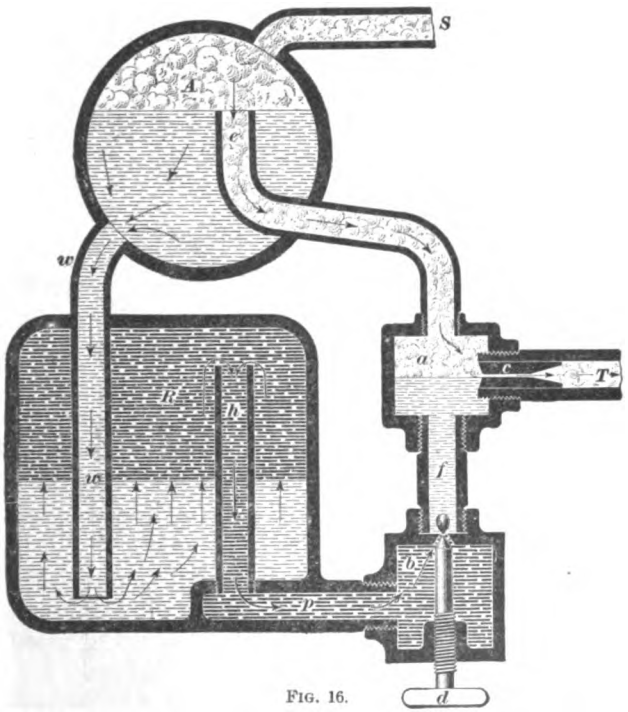

FIG. 16.

It is not the pressure of the steam that forces the oil through the passages *h* and *p* into chamber *b*, but the pressure due to the head of water in the condenser, and this head is made such as will give the best results. When once the oil enters *b*, a drop floats upwards through the water, regardless of the pressure in *f*. The statement is frequently made that the successful working of the lubricator depends on the *equalizing feature*. This simply means that the pressure of the steam in chamber *a* must

be maintained equal to the pressure, due to the steam, in chamber *b*; for, if they are not equal, the action of the lubricator will be irregular. The choke plug *c* restricts the flow of steam out of the lubricator, and thus maintains a steady pressure in the chamber *a*. If this equalization is maintained, the lubricator will pass oil into the pipe *T* regularly, regardless of the pressure in the steam chest, for the reason that a constant force, the head of water in *A*, is acting to force the oil through passage *p* into *b* and so through the regulating valve *d*. As the oil passes through valve *d*, it forms a drop and floats to the surface of the water in *a*, when it is carried through the choke plug *c* into the oil pipe *T* by the current of steam that is constantly flowing in the direction indicated by the arrows.

NATHAN LUBRICATOR.

44. Description.—Fig. 17 (*a*) presents a front view of a **Nathan triple sight-feed lubricator** as used on locomotives, (*b*) representing a side view, showing the lubricator fastened to the boiler head bracket by nut *8*; *1* is the condenser, to which steam is conducted by the copper or brass tubing *S*, leading from either the dome, or the top of the boiler with a dry pipe up to the dome. *V*, view (*b*), is a steam valve for controlling the steam supply to the lubricator. *2* is the filling plug, by unscrewing which the lubricator may be filled. An auxiliary oiler *3* is provided for each cylinder, which is to be used in case a feed-glass should break. These oilers are entirely independent of the lubricator, and are operated and used in the same way as were the old cab oilers. For each sight-feed glass *9*, *9'*, and *9''*, a safety valve *4* is provided, so that, in case the feed-glass should break, this safety valve and also the regulating valve *18* may be closed; *5 a* is the blow-off plug, one to each glass. The oil pipes *6'* and *6* lead from the oil outlets of the lubricator to the right and left steam chests, respectively; *6 A* is the oil pipe to the steam cylinder of the air pump; *7* is the water valve that controls the passage between the condenser *1* and the oil reservoir *12*; *14* is the glass gauge that indicates the amount of oil and water present in the

reservoir; *17* is a waste cock, provided for drawing off the water from the reservoir. The regulating valves *18* are used to regulate the number of drops of oil fed per minute.

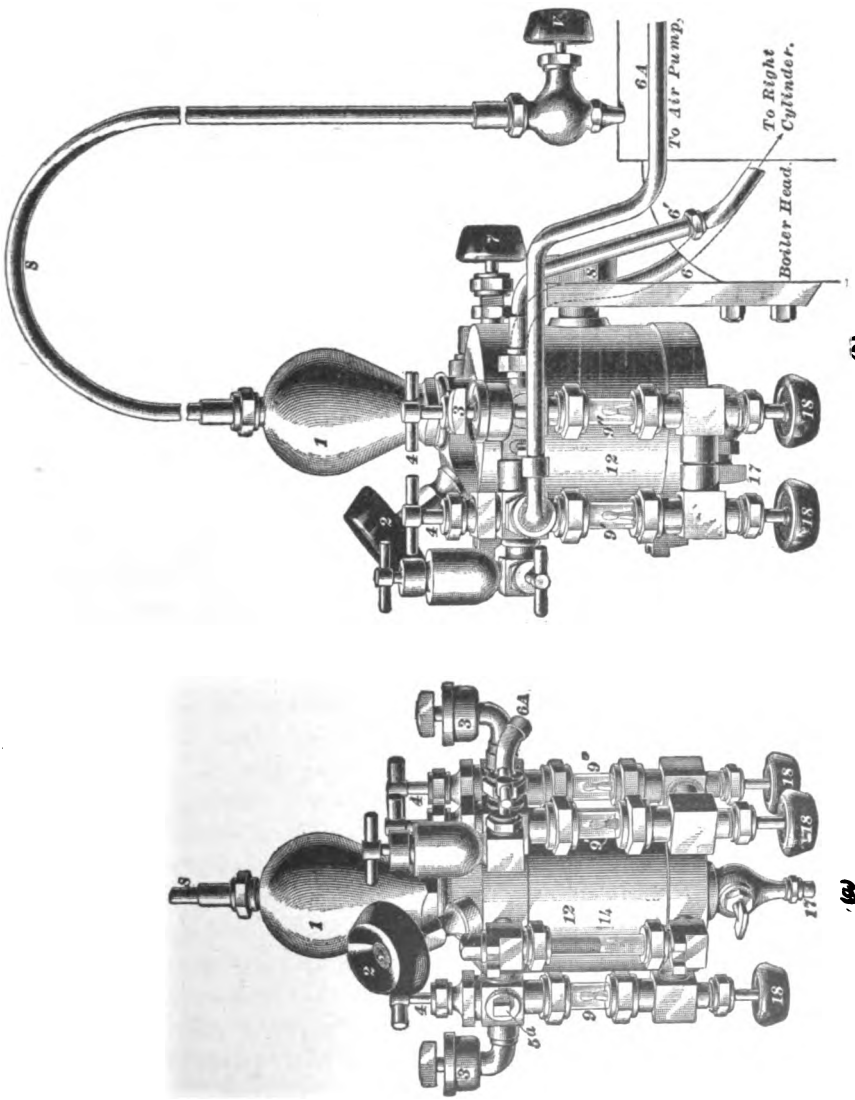

FIG. 17.

45. Four sectional views of this lubricator are given in Fig. 18. View (*b*) shows the lubricator partly in elevation and partly in section, the section being taken on the line *C C* of view (*a*); view (*c*) is a section on line *A A* of views (*a*) and (*b*); view (*a*) is a section on line *A A* of view (*c*); and view (*d*) is a section on the line *B B* of views (*a*) and (*c*). Inside the condenser are three equalizing tubes *21*, *21'*, and *21''*, one for each feed-glass. In view (*a*) the holes corresponding to *21* and *21'* are seen, but not that of *21''*. In view (*c*) *21''* is seen in section and *21'* in elevation. In view (*d*) *21''* is seen in elevation; *21* and *21'* are not seen in this view. Small holes are drilled in the top of each tube, and the lower end of each is connected to its feed-glass by a small passage *a*, views (*a*) and (*c*). It is the water of condensation which passes through these tubes that keeps the feed-glasses full. (In some later types of the Nathan lubricator the equalizing tubes are placed outside the condenser.)

The condenser *1*, view (*d*), is connected with the oil reservoir through the passage *b*, water valve *7*, and water tube *23*, the lower end of this tube opening into the pocket *c*, views (*d*) and (*a*), this pocket being formed by the partition *d*. When, before refilling the oil reservoir, the water is drawn off through waste cock *17*, pocket *c* remains full of water; and, as the lower end of the tube *23* is below the surface of this water, oil cannot "back up" into the tube when the reservoir is filled, since it floats upon the water in the pocket. Another pocket *n*, situated directly above pocket *c*, is formed by the partition *l*; see views (*c*) and (*d*). When the lubricator is being filled, the oil rises until it reaches the bottom of the partition *l*, when the air that is trapped in the pocket *n* prevents the oil from entering, even though the reservoir is filled completely. The pocket *n* is provided to allow for the expansion of the oil when heated, should the reservoir be completely filled. The tendency of the oil to expand compresses the air in the pocket, and thus more space is provided, into which the oil expands. If this space were not provided, and the water valves and regulating valves were closed, the force exerted by the oil in trying to expand would bulge or burst the reservoir.

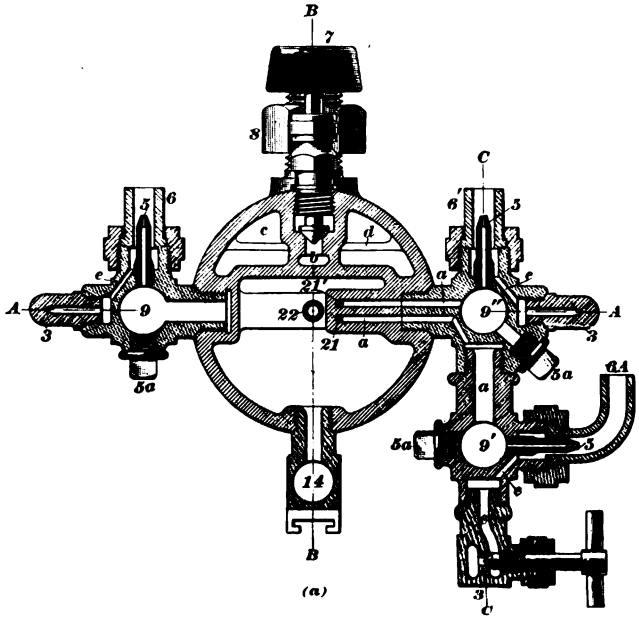
B
7
8
C
6
5
6'
5
c
d
b
e
a
e
21'
A
9
22
9''
A
3
21
a
3
5a
5a
6A
a
5a
9'
5
14
e
B
3
C

(a)

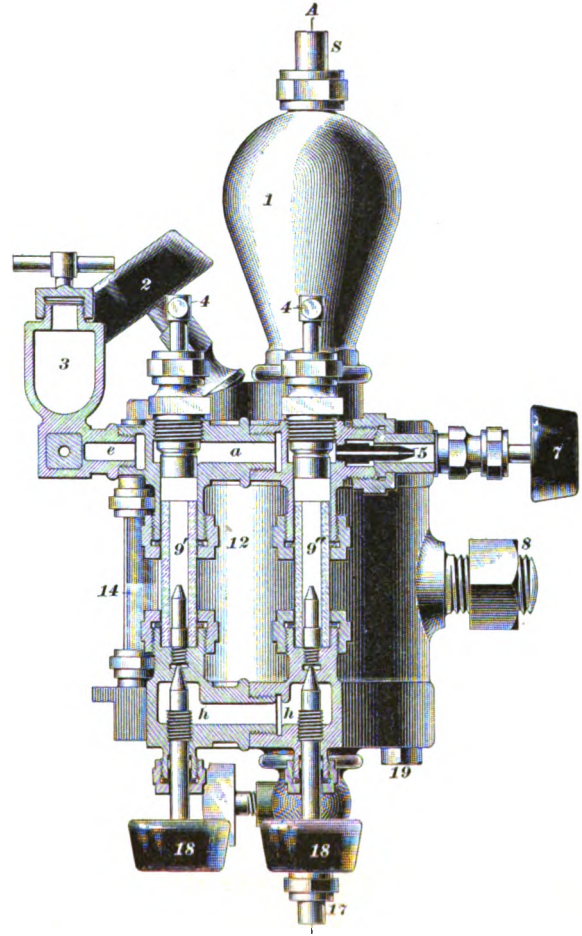
A
S
1
2
4
4
3
e
a
5
7
9'
12
9''
8
14
h
h
19
18
18
17

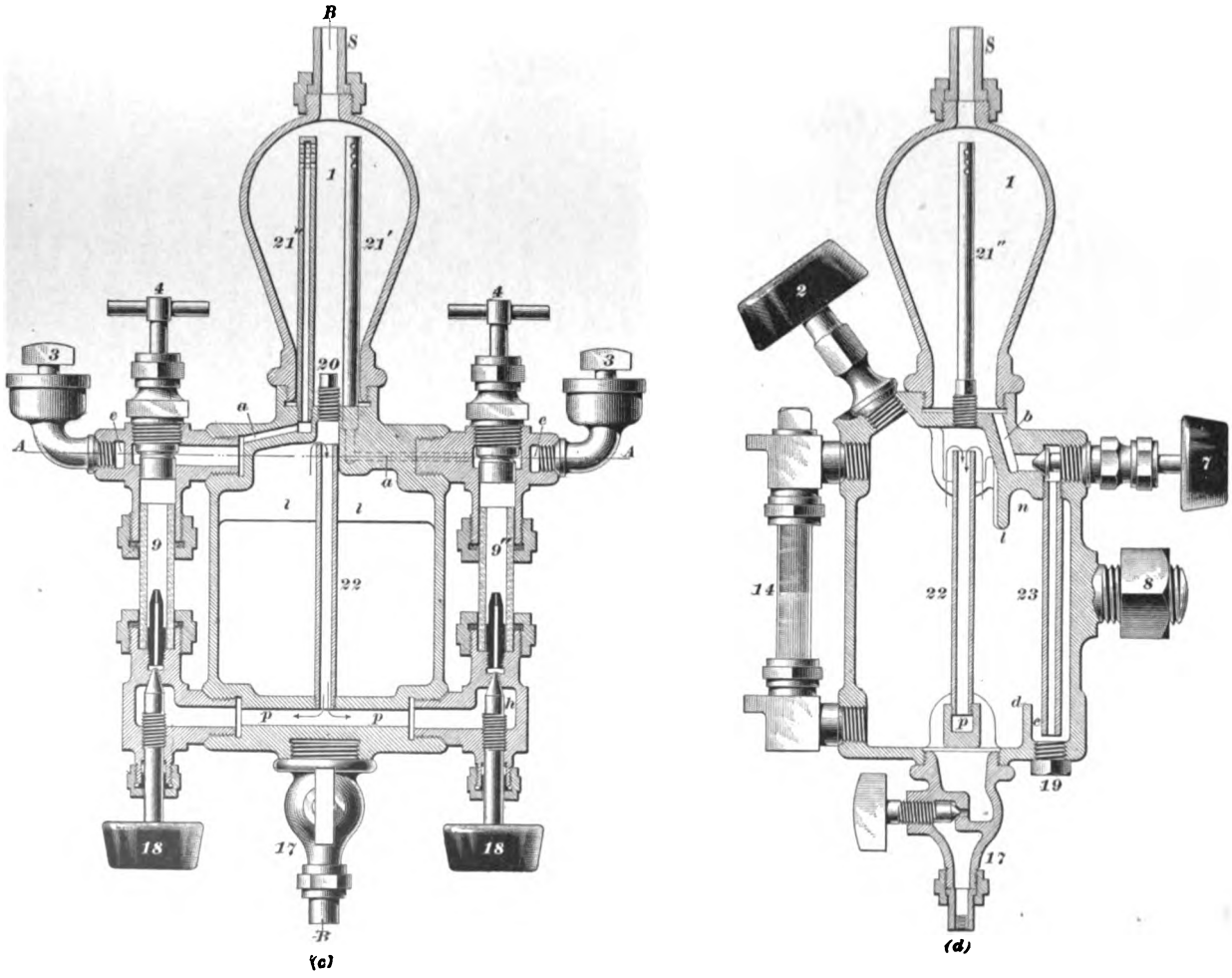
B
S
1
21''
21'
4
4
3
3
20
a
a
c
c
A
A
l
l
9
9'
22
p
p
h
18
17
18
B
(c)
S
1
21''
2
b
7
n
l
14
22
23
8
d
c
p
19
17
(d)

FIG. 18.

The oil tube *22* is open at the top and is in direct communication with the reservoir *12*; its lower end communicates with the oil chamber *p*, which leads to the under side of each of the regulating valves *18*. The oil tube and chamber *p* are full of oil as long as there is any in the reservoir.

The condenser *1* always stands about four-fifths full of water, which is condensed from the steam. When the water valve *7* is opened, the water can pass down through passage *b*, valve *7*, and tube *23*, to the bottom of the oil reservoir. The oil floats on the water, and is thus forced by the head of water upwards, and then down the oil tube *22* and into chamber *p* by the head of water in the condenser. The steam pressures at the top and bottom of the feed-glasses neutralize each other. As the oil passes through the regulating valve it forms a drop and floats upwards, and is carried into the oil pipe by the current of steam that is flowing down through the equalizing tubes, thence out through the choke plugs *5* to the steam chest. As fast as the oil is used from the reservoir its place is filled with water that flows down from the condenser.

46. Refilling and Operating.—To refill the reservoir, close all the valves *18*, and also the water valve *7*, from the condenser; draw off the water from the reservoir through the waste cock *17*; then remove the filling plug *2* and fill the reservoir with *clean strained oil*. Replace the filling plug and open the water valve *7* *immediately*, whether the feeds are to be started or not. This is an extra precaution against the expansion of the oil bulging the reservoir, since, if the water valve is open, the oil will simply back up into the water tube *23* and condenser *1*, as the pressure increases in case the oil reservoir has been filled too full.

The safety valves *4* are to be used *only* in case a feed-glass breaks. In that event, close the safety valve *4* and regulating valve *18* of the broken glass, and use the auxiliary hand oiler *3* until the glass can be replaced. The breaking of any one glass will not interfere in the least with the operation of the other feeds.

The steam valve *V* must always be opened before the engine

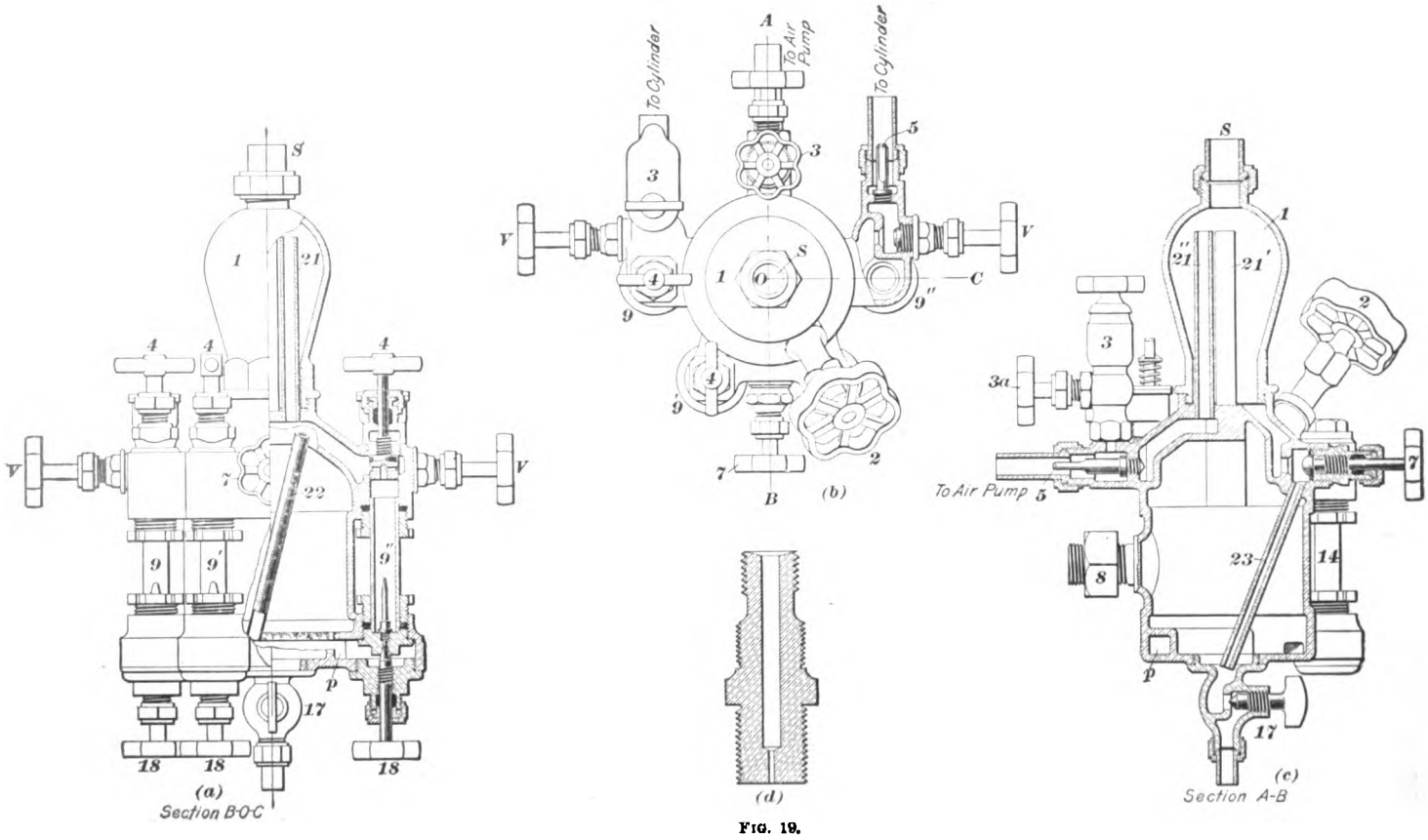
S
1
21
4
4
4
V
V
7
22
9
9'
9''
p
17
18
18
18
(a)
Section B-O-C
A
To Air Pump
To Cylinder
To Cylinder
3
5
V
V
S
1
C
4
9
9''
4
9'
7
2
B
(b)
(d)
S
1
21''
21'
2
3
3a
To Air Pump 5
7
23
14
8
p
17
(c)
Section A-B

FIG. 19.

leaves the roundhouse, and *must be kept open as long as the engine is moving*, regardless of whether the feeds are operating or not. It should be the *first* valve opened before leaving the roundhouse and the *last* valve closed on returning to it.

The water valve *7* should *alway be open* except when the oil reservoir is being filled.

To start the feeds, open the regulating valves *18* and regulate until the desired number of drops per minute are being delivered.

To stop the feeds, close the regulating valves. If the water valve *7* can be closed tightly it will stop the flow of water into the oil reservoir, and no oil will pass out through the regulating valves.

IMPROVED NATHAN LUBRICATOR.

47. Description.—The latest improved form of Nathan triple sight-feed lubricator is illustrated in Fig. 19, in which view (*a*) is a section through the lubricator on the lines *B O C*, view (*b*); view (*b*) is a plan view; and view (*c*) is a section on the lines *A B*, view (*b*). The construction of the lubricator is clearly shown in the illustrations; it is very similar to that of the old lubricator, except that the equalizing tubes *21* and the passages in the body of this lubricator are made larger. Also, the air pump sight-feed *9'* is on the front of the cup, whereas the oil-pipe connection is at the back, the two being connected by a passage in the cup.

The parts in these illustrations are numbered the same as in the illustrations of the old lubricator.

A steam-chest oil plug, view (*d*), is used with this lubricator, the bore of which must not be less than $\frac{3}{32}$ inch, or more than $\frac{1}{8}$ inch to give proper results. The object of this plug is to prevent oil being held up in the oil pipes, and its bore bears a certain relative proportion to the bore of the choke plugs *5* in the cylinder oil outlets.

48. Operation.—The directions for operating this lubricator are substantially the same as for the old one.

To use hand oiler *8*, first close the outlet valve *V*, then fill the

hand oiler, open the oiler valve and when the oil has passed into the oil pipe, close the hand-oiler valve and open the outlet valve *V* wide.

The outlet valve V must be kept wide open at all times, except when using the hand oiler, as directed above.

DETROIT LUBRICATOR.

49. Description.—Fig. 20 illustrates the **Detroit triple sight-feed lubricator** as used on locomotives, (*a*) being a front view and (*b*) a side view.

A is the oil reservoir; *B*, *B*, the auxiliary oilers; *C*, the connection to the boiler; *D*, the water valve; *E*, *E*, the regulating valves for engine-cylinder feeds; *F*, the condenser; *G*, the drain cock; *H*, *H*, sight-feed glasses to engine-cylinder feeds; *I*, the regulating valve for the air-pump feed, *K*, the air-pump feed-glass; *M*, a steam valve in the boiler connection; *O*, the filling plug; *R*, the air-pump connection; *T*, *T*, water plugs; and *a* and *e*, equalizing tubes for the air-pump and engine-cylinder feeds, respectively. The equalizing tubes of this lubricator are placed outside the condenser, and connect with it *above* the steam connection *C*. The condenser therefore fills with water up to the level shown by the dotted lines; any surplus condensation will drain back into the boiler.

Fig. 21 (*a*) shows one of the sight-feed arms in section; part of the oil reservoir is represented as broken away, in order to show the oil pipe *37* leading to the feed-glass. There are two oil pipes *37* and one *38* in the reservoir, views (*c*) and (*d*), one for each feed-glass; pipe *38*, which connects with the air-pump feed, is a little shorter than either of the other two. The water tube, through which the water passes from the condenser to the bottom of the oil reservoir, is not seen in the figure. View (*b*) is taken looking at (*a*) in the direction of the arrow; it shows another section of a feed-arm. The check-valve *s* is used as a safety device, closing automatically when the glass breaks, and thus preventing the escape of steam. The passage through which the oil flows from the hand oiler *B* to the oil pipe is indicated by small arrows.

View (*c*) is a section taken through the upper feed-arms; it shows the oil pipes *S* and *S'*, which lead to the engine cylinders,

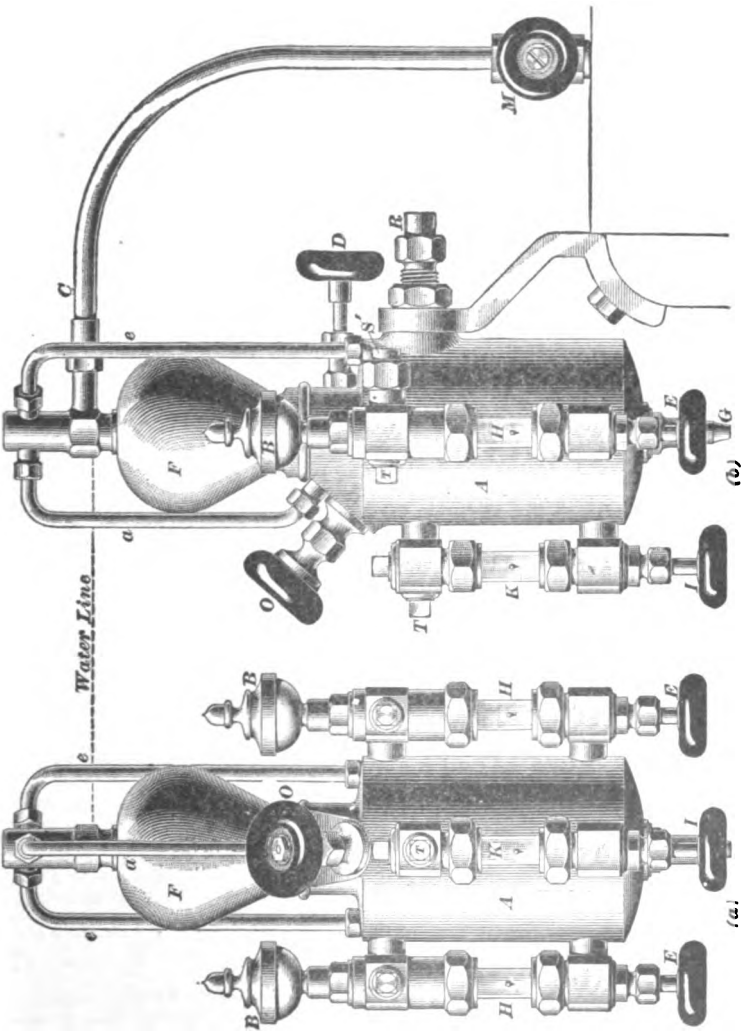

FIG. 20.

and the air-pump oil pipe *R*. The choke plug *c* for each oil pipe is also shown. The equalizing tubes *e* connect with the

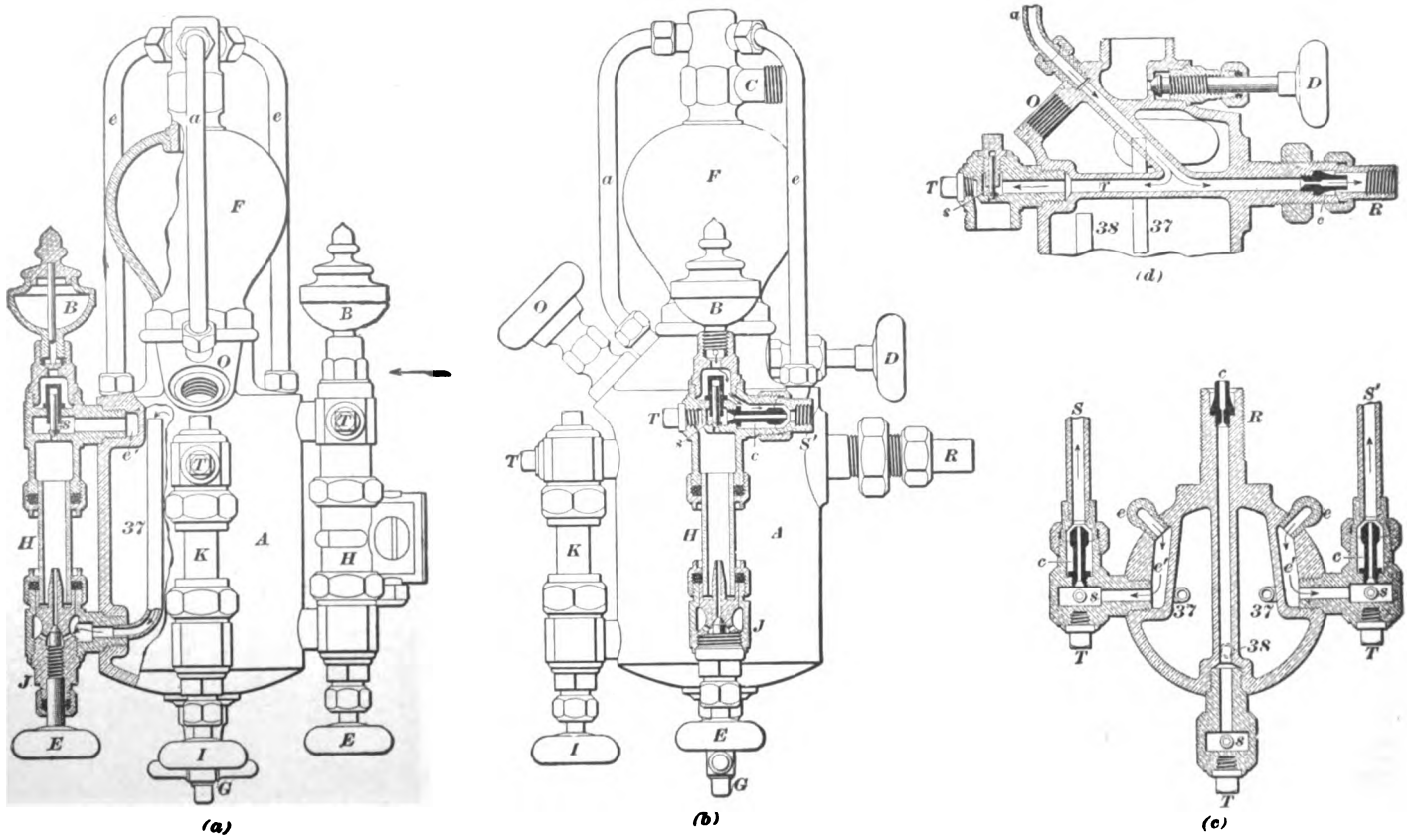

FIG. 21.

reservoir as shown, and communicate with the upper feed-arm and the choke plug by a passage *e'* in the casting, as shown by the arrows.

View (*d*) is a vertical section through the air-pump feed-glass *K* and the air-pump connection *R*. This view shows the oil passage *r* through the upper part of the reservoir body. The air-pump equalizing tube *a* connects with the passage *r* as shown.

This lubricator works on the same principle as the Nathan. The steam passing through the equalizing tubes maintains a pressure on the water in the feeds equal to that in the condenser; and the pressure exerted by the head of water in the condenser forces the oil through to the feed-valves. As fast as the oil is used from the oil reservoir it is replaced by water from the condenser.

50. Refilling and Operating.—To refill the reservoir, close valves *D*, *E*, and *I*; draw off the water from the reservoir, and fill through the filling-plug opening *O* with clean strained oil, and then reopen the valve *D immediately*. Regulate the feeds by means of valves *E* and *I*.

To operate the lubricator, open valve *M*, Fig. 20 (*b*), and then valve *D*, and adjust the feeds by means of the regulating valves. If a glass breaks, the auxiliary oilers *B* are to be used in the same way as the old cab oilers, that is, by closing the throttle while feeding, the oil being then drawn down into the steam chest by suction—to express the action in popular terms.

The steam valve *M* must *always be open* when the engine is moving, and the valve *D* should only be closed when filling the oil reservoir.

IMPROVED DETROIT LUBRICATOR.

51. Construction.—The latest improved form of Detroit lubricator is illustrated in Fig. 22. View (*a*) is a front elevation with part of the oil reservoir and right sight feed broken away to show the construction of the regulating valves *E* and by-pass valves *j*. View (*b*) is a side elevation with the feed-arm

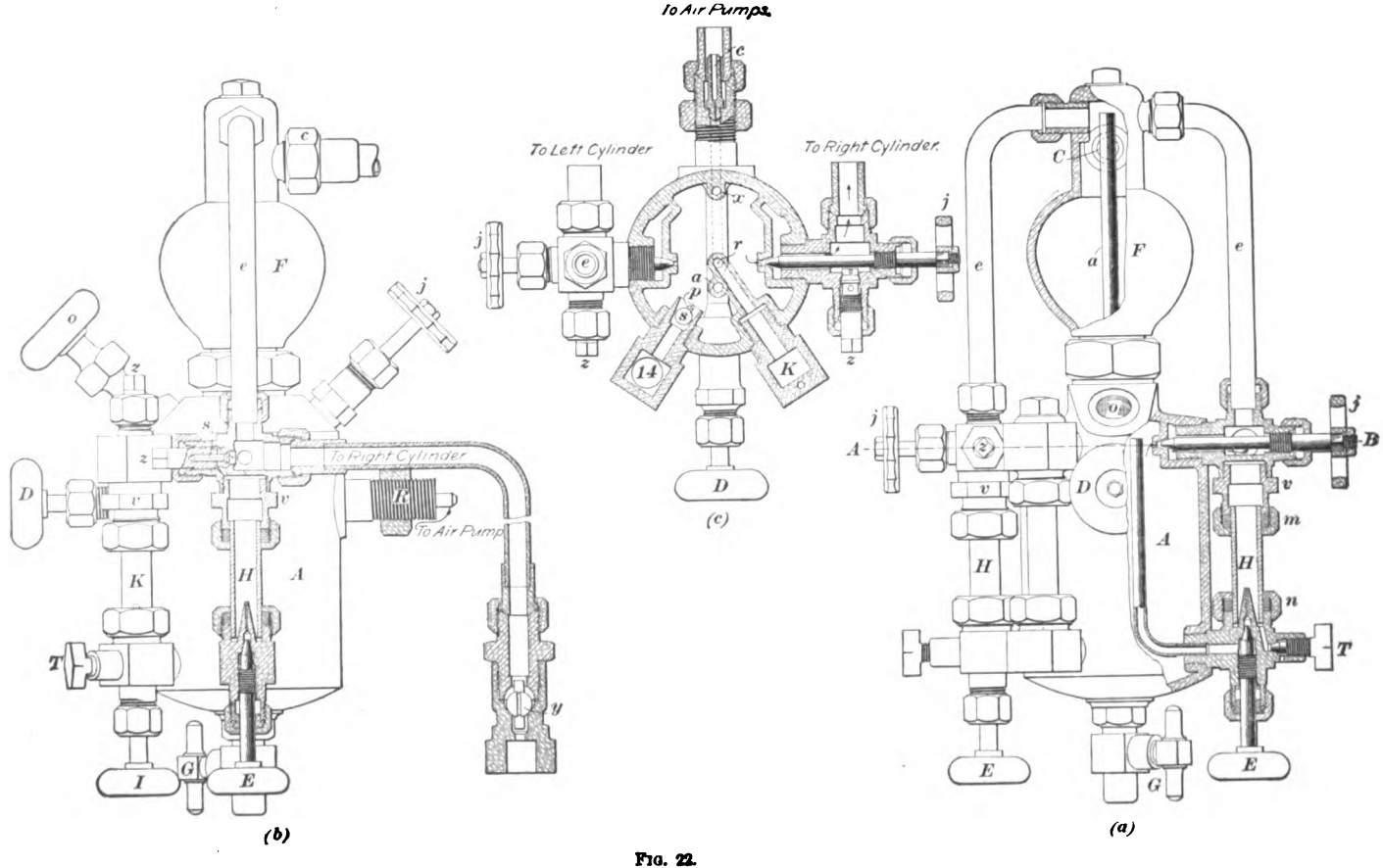
To Air Pumps.
To Left Cylinder
To Right Cylinder.
To Right Cylinder
To Air Pump
(a)
(b)
(c)

FIG. 22.

broken away to show the passage leading from the feed-glass *H* through the safety valve *s* into the oil pipe to the cylinder. View (*c*) is a cross-sectional view taken on the sectional line *A B*, view (*a*). It will be seen that while there are some slight changes, the general construction of this style of lubricator is, in many respects, very similar to the old one. The parts in these illustrations are numbered the same as in the illustrations of the old lubricator.

It will be noticed that this lubricator has but two outside equalizing tubes, marked *e*, *e*, the one for the air-pump feed, marked *a*, being within the condenser. It screws into the hole *a*, view (*c*), which opens into the passage *r* leading to the air-pump connection at the back of the lubricator. The equalizing tubes, as well as the steam pipe to the lubricator, have been enlarged so that a larger supply of steam now goes to the oil pipes. The gauge glass *14* is provided with an automatic ball check-valve [a small ball *s'*, view (*c*)] in both the upper and lower gauge arms that close and prevent the escape of oil and water in the event of the glass breaking.

The by-pass valves *j* that replace the hand oilers on the other lubricators are also a new feature. They are intended for use only when oil cannot be fed through the feed-glasses, as, for instance, when a glass breaks; at all other times they should be kept closed tight so as to prevent a waste of oil. When a valve *j*, view (*a*), is open, the oil passes directly from the oil reservoir *A* through the valve and out to the oil pipe, as indicated by the arrows. These valves are made to feed at the same rate as the regulating valves *E* for the same amount of opening; that is, if both are opened, say, $\frac{1}{8}$ turn, they will feed at the same rate. Another advantage is that they feed continuously like the feed-valves, it not being necessary to shut the engine off to use them. Only one regular choke plug is used, that being in the air-pump connection, view (*c*). The cylinder oil pipes are supplied with a steam-chest plug that contains a ball check-valve *y*, view (*b*), which performs the duty of the choke valve. Their construction is such as to prevent their becoming inoperative through the lodgment of dirt or sediment at that point.

52. Operation.—The directions for operating this lubricator are the same as for the other. However, there are several additional points to be remembered with this lubricator.

To clean the glasses, open the valve *T* and unscrew the safety valve *z* sufficiently to make a direct opening between the feed-glass and the oil pipe, view (*b*). This will permit steam to blow through the equalizing tube past *z* and through the glass and valve *T* to the atmosphere. When the glass is clean, close the valve *T*, and as soon as the glass fills with water, screw *z* tight to its seat and leave it in that position. These valves should be kept closed when the lubricator is in operation.

To operate the by-pass valves, proceed as follows: Always keep them closed unless in use. In the event of a glass breaking, close its regulating valve *E* and use the by-pass valve for oiling that cylinder. Regulate the feed exactly as you would the regulating valve; that is, turn it the same amount in opening, as it will then feed the same. If it is opened too much, oil will be wasted just as it is if the regulating valve is opened too much.

To remove a glass, unscrew the gland nuts *m* and *n* and push the upper one down on the lower. Then unscrew the sleeve *v*, push it down on the glass and the glass can then be readily taken out.

To replace a glass, place the gland nuts and sleeve *v* properly on the glass and insert the glass; next screw the sleeve *v* to place and tighten the gland nuts.

MICHIGAN LUBRICATOR.

53. Description.—In the Detroit and Nathan types, as already shown, a choke plug is used in the discharge opening from the lubricator to the oil pipe leading to the steam chest. The object of a choke plug is to restrict the flow of steam from the lubricator so that a pressure uniform with that of the boiler may be maintained in the lubricator at all times when it is working. Practically all locomotive cylinder lubricators have this choke plug; in some of them it is located at the steam-chest end of the oil pipe, instead of in the lubricator.

In the **Michigan lubricator**, illustrated in Fig. 23, the

openings that convey the steam and oil from the feed-glass to the oil pipes leading to the steam chest are not restricted in any way. On the contrary, they are somewhat larger than in the other types, both as regards the steam pipe leading from the boiler,* and also the steam passages in and around the oil reservoirs. The oil pipes leading to the steam chest are of the ordinary size.

In view (*a*) is shown the lubricator as a whole, with the exception that certain portions are removed so as to show the internal construction more clearly. View (*b*) is a horizontal section through the body of the lubricator, taken on the line of the upper feed-arms. View (*d*) represents a portion of the lubricator on a larger scale, this being done so as to show more clearly the various passages, valves, etc.

Referring to the various parts: *A* is the oil reservoir; *B*, the condenser; *E*, the filling plug; *F*, the drain cock; *K*, the cap for the removable plug which allows of a new glass being put in; *L*, the pipe that conveys oil to the feed-glass; *M*, the oil pipe, or "tallow pipe" as it is still often called; *O*, the regulating valve; *P*, the filling valve, and *R*, the feed-valve, for the auxiliary oiler; *Q*, the water pipe that carries the water down from condenser to reservoir; *S*, the steam pipe from boiler; *T*, the lifting stem for check-valve *d*; and *W*, the water valve.

At the steam-chest end of the oil pipe *M* is a choke plug, the design of which is shown in view (*c*). This choke plug, which is shown on a larger scale than the lubricator itself, has two openings—a small one *a*, and a large one *b*. The small one *a* is open at all times. The large one *b* is intended to be open when the engine is working steam and the pressures are therefore equalized in the oil pipe and steam chest, and to be closed by the ball valve *c* when the throttle is shut, or at any time that the pressure in the steam chest is much lower than in the lubricator. When the throttle is shut, the pressure being greater in the lubricator and oil pipe than in the steam chest, the ball *c* rolls up against its seat, closing the large opening *b*. The steam from the lubricator, carrying with it the

*The steam-supply pipe *S* should have a bore of not less than ¾ inch.

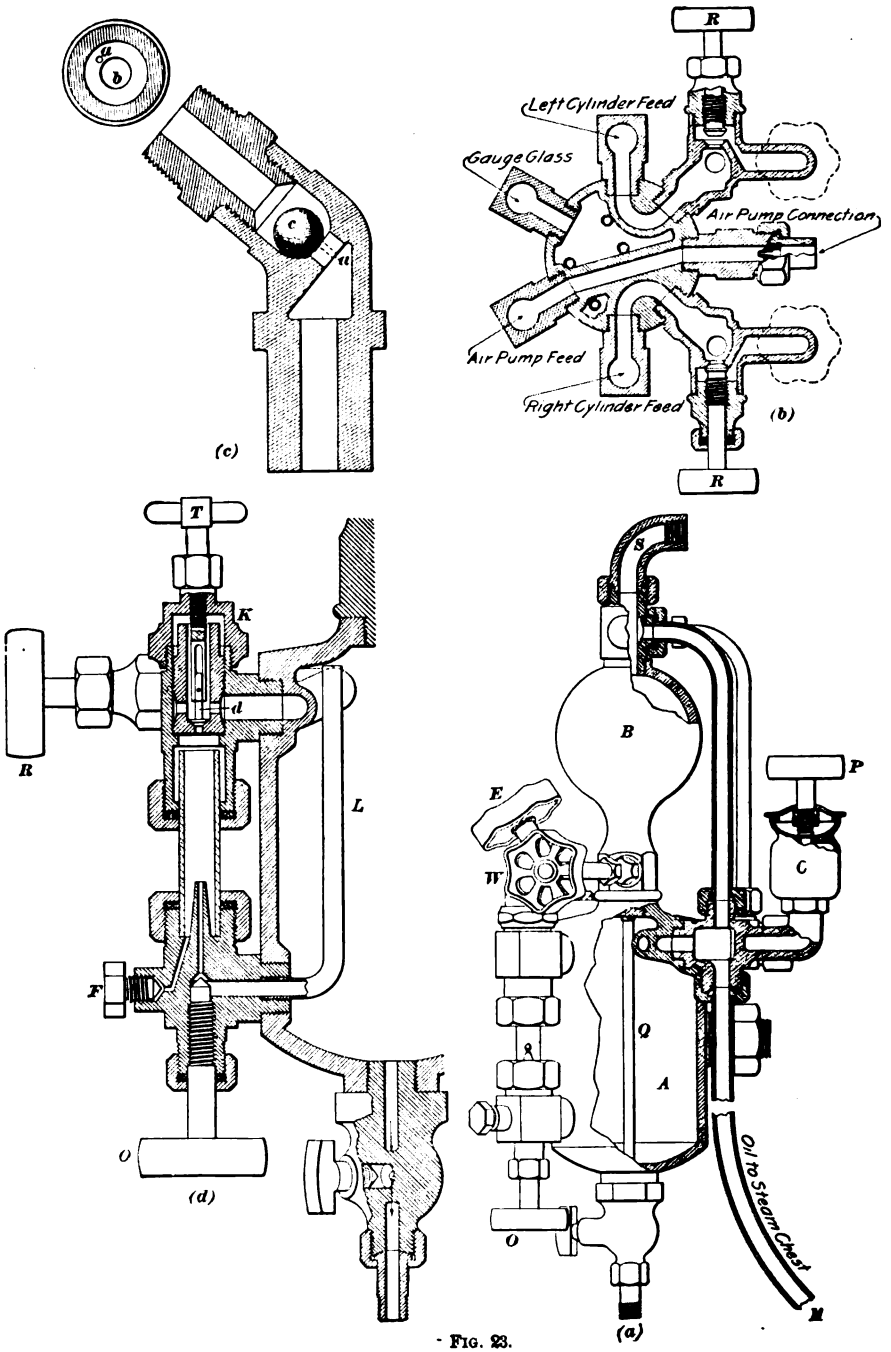
a
b
c
(c)
R
Left Cylinder Feed
Gauge Glass
Air Pump Connection
Air Pump Feed
Right Cylinder Feed
(b)
R
T
K
d
R
L
F
O
(d)
S
B
P
E
W
C
Q
A
O
Oil to Steam Chest
M
(a)

FIG. 23.

oil, must then pass through the small choke *a*. When the throttle is open, or when the pressure in the steam chest has equalized with that in the oil pipe, the ball valve *c* drops from its seat and uncovers the large opening *b*, through which steam can pass away from the lubricator. This ball *c* is also made with small grooves around it, which serves the same purpose as the choke *a*; the grooves being less liable to become choked. With this style of ball *c*, the choke *a* is not used.

The auxiliary oiler, shown in view (*a*), has a hand valve *P* by which the cup *C* is filled, and a feed-valve *R*, see views (*b*) and (*d*), controlling the opening from this cup to the oil pipe. To operate the auxiliary oiler, close the valve *R* and open the valve *P*, allowing any steam that may be in the cup *C* to pass out; then put in the oil, close the valve *P*, and open valve *R*, which permits this oil to pass into the oil pipe. There is an auxiliary oiler for each cylinder.

The automatic *check-valve d* at the top of the sight-feed glass, view (*d*), is secured to the lifting stem *T* by a pin which passes through the stem of the valve and works in a slot in the stem *T*. When the stem *T* is screwed clear up, it lifts the valve *d* off its seat and holds it off; when screwed down, it allows valve *d* to seat and prevent the passage of steam or water back into the sight-feed glass, in the event of a glass breaking. To fill the feed-glass with water the valve *d* must be raised off its seat so as to allow condensed water from the equalizing tubes to fill it.

The small drain plug *F* is to allow water, and (in case the glass is being blown out clean) steam also, to pass out of the glass.

54. Refilling and Operating.—To refill the reservoir, close the regulating valves *O* first, and the water valve *W* last; it is not necessary to close the steam valve that controls the steam supply from the boiler. Fill through the plug *E*.

To operate the lubricator, open the steam valve full, admitting boiler pressure; then open the water valve *W*, and when the condenser and sight-feed glasses are full of water, start the feeds, regulating them by the valves *O*.

When leaving the engine after a run, close the valves *O* first and the steam valve last, leaving the water valve *W* open.

LUBRICATOR TROUBLES.

55. Choked Feeds, Etc.—Trouble is sometimes occasioned by the stopping up of the sight feeds or the choke plugs. When a sight feed is found to be stopped up, close the regulating valves on the other feeds; next close the water valve that regulates the opening between the condenser and the oil reservoir; open the check-valves over the sight-feed glasses, where such are provided, and then open the drain cock at the bottom of the reservoir. If the steam valve is open, steam will blow down through the equalizing tube into the feed-glass and force the contents of the sight feed, including the obstruction, up into the oil reservoir, after which the drain cock should be closed. The regulating valve should then be shut until the feed-glass refills with condensed water, when the feed will be found to work all right. As soon as the drain cock is closed, the water valve should be opened and the other feeds may then be started.

To blow out the sight-feed glasses on a Michigan lubricator, the plug *F* must be removed, and the valve *d* lifted off its seat by unscrewing the stem *T*; after the glass has been blown out and refilled with condensed water, the stem *T* should be screwed down to allow the check-valve *d* to come to its seat.

If a choke plug in a Nathan lubricator becomes stopped up, close the steam valve in the boiler connection, and open the throttle on the engine. Steam pressure will then back up from the steam chest through the oil pipe and blow the obstruction into the feed-glass.

The check-valve in the Detroit and Michigan lubricators, if acting properly, would seat itself directly the steam valve was closed. So in these cases, the oil pipe should be uncoupled from the feed-arm and the choke cleaned out by hand. Even in the Nathan, this is the most satisfactory proceeding, although a temporary stoppage in the choke may sometimes be blown out.

56. Replacing a Broken Feed-Glass.—Should a feed-glass break on a Nathan lubricator, first close the regulating valve

at the bottom of the broken glass, then the safety valve at the top, and use the auxiliary oiler until the glass can be replaced. To replace the glass, close the water valve and then the steam valve; take off the packing nuts on the feed-glass, and unscrew the valve box of the safety valve above that glass. The new glass may now be dropped in from above, through the packing nuts. Use new gaskets, and do not tighten the packing nuts too tight at first, or another broken glass may result. The valve box should now be replaced, and the steam and water valves opened, and as soon as the glass fills with water the feed may be restarted. If it is desired to start the feed at once, the blow-off plug *5 a* may be removed and the glass filled with clean water.

When a glass breaks on a Detroit lubricator, close the regulating valve; the safety valve *s* is supposed to close automatically. To replace the glass, close the water valve and steam valve; open the drain-cock, and draw enough water from the reservoir to allow the oil to drop below the top of the oil tubes; take off the packing nuts and unscrew feed-valve box *J* from the lower feed-arm; insert the glass from the bottom and use new gaskets to make tight joints; then replace the valve box in the lower feed-arm. The glass will probably have to be filled with water by unscrewing the plug *T* and filling by hand. The steam and water valves may then be opened and the feeds started.

When a glass breaks on a Michigan lubricator, close the regulating valve; the check-valve *d* is relied on to close automatically. To replace the glass, close the steam and water valves, take off the cap *K*, and remove the plug that has the check-valve *d* in it; this will allow a new glass to be put in from the top—see Fig. 23 (*d*).

57. Irregularities of Feed.—Irregular feeding can generally be traced to one of three causes:.

1. *Passages Too Small.*—The passage through the steam valve, or the bore of the steam-supply pipe, may be too small. Either of the above will prevent the lubricator from receiving full boiler pressure. To see the effect of the above causes on

the working of the lubricator, partly close the steam valve and note the feeds as the cut-off and position of throttle are changed. The steam valve should always be *wide open* while the feeds are operating.

2. *Equalizing Tubes Partially Stopped Up.*—This reduces the pressure above the water in the feed-glasses, the equalization is destroyed, at times when the steam-chest pressure is less than boiler pressure, the pressure acting to force the oil through the feed-valves is increased, and as a result, the feed works too fast and the oil tends to enter the feed-glass in a stream, instead of forming in drops. If the equalizing tubes were wholly stopped up, steam pressure would be cut off from the top of the feed-glass, and the net force acting to send the oil through the feed-valves would then equal the boiler pressure plus the pressure due to the head of water. Under such conditions the oil would squirt into the feed-glass if the feeds were opened only very slightly. It is seldom, however, that trouble is experienced from the equalizing tubes choking or stopping up.

3. *Choke Plugs Worn Too Large.*—The choke plug (marked *5* in the Nathan and *c* in the Detroit) is a small metal plug that is screwed into the upper feed-arm and opens into the oil pipe, as shown. It has a small hole (about $\frac{1}{32}$ inch in diameter) drilled in it, through which the oil and steam pass to the oil pipe. A choke plug is necessary, for, if the oil-pipe opening were not thus contracted, the fluctuation of pressure above the water in the feed-glass, every time the engine throttle or reverse lever was moved, would cause the feed to be extremely irregular. When a choke plug is used, it permits only a small flow of steam to escape into the oil pipe, and, consequently, the boiler pressure can be more nearly maintained, both in the condenser and in the feed-glasses. The opening in a choke plug must bear a certain relation to the quantity of steam delivered through the equalizing tubes, and if this is disturbed by the opening in the choke plug wearing larger, the feed will be irregular and will increase when the steam-chest pressure is decreased. The only remedy for this is to replace the worn-out plug with a new one having an opening of the proper size. A partially

stopped-up equalizing tube will produce the same effects as a worn-out choke plug.

If the throttle is opened while the steam valve on the lubricator is closed, the water in the sight-feed glasses will become dirty. The reason for this is that, as there is no pressure in the lubricator, steam passes from the steam chest up through the oil pipes and choke plugs into the feed-glasses, and carries with it dirty water and oil from the oil pipes. Whenever the sight feeds become muddy, therefore, it indicates that for some reason the pressure in the lubricator is less than steam-chest pressure, and the cause should be ascertained and remedied.

58. Loss of Oil.—In some instances, the oil has been known to mysteriously disappear from the oil reservoir when the feed-valves were closed but the water and steam valves open. Fortunately, this is not a frequent occurrence, and it is usually found to be due to some mechanical defect in the lubricator. Some defects that have been known to cause the loss of oil are:

1. *Defective Casting.*—A small blowhole may exist in the casting, forming a passage from the oil reservoir into the condenser or the upper feed-arm. In such a case the oil is forced through the blowhole and disappears.

2. *Defective Water Pipe.*—The water pipe that leads from the condenser to the bottom of the oil reservoir may be split, or may make a poor joint where it screws into the water passage in the casting. In either case the oil will float up into the condenser and disappear.

3. *Leaky Plug.*—The plug *20* in the Nathan lubricator, Fig. 18 (*c*), through which the oil pipe *22* is inserted, may permit the oil to leak through up into the condenser.

4. *Leaky Packing.*—If the gaskets at the bottom of the feed-glasses in a No. 2 Detroit lubricator are not tight, the oil will leak through and be lost.

5. *Leaky By-Pass Valves.*—In the improved Detroit lubricator, the by-pass valves *j* may be leaking.

Cases have been reported where the oil has been siphoned out of the lubricator when the regulating valves were closed, the water and steam valves open, and the boiler allowed to cool

down. In the modern lubricator, however, it is hardly probable that the oil can be siphoned out in this manner, and any disappearance of oil can, in almost every instance, be traced to some mechanical defect.

59. Oil Held in Pipes.—Generally there are two forces acting to carry the oil through the oil pipes from the lubricator to the steam chests; namely, the force of gravity, which is constant, and the flow of steam, which fluctuates; the latter is usually flowing in greater or less quantities through the oil pipes. If the oil were to be carried along by the force of gravity alone, its flow would be slow and sluggish, and for that reason the flow of steam is supplied to accelerate its movements. The circulation of steam between the lubricator and the steam chest depends, of course, on the difference in pressure between the two places. It is greatest when the throttle is closed, and it decreases gradually as the throttle is opened; the rate of flow of the oil through the pipes, therefore, varies correspondingly. If the pressures in the steam chest and oil pipes become equal, the circulation of steam through the oil pipes ceases, and the oil is carried onward by the force of gravity alone.

60. Flow of Oil to Steam Chest.—Until the introduction of high-pressure locomotives, it seems that but little trouble was experienced in keeping the valves properly oiled. When high pressures came into use, however, it was noticed that, when working with wide-open throttle and short cut-off, the valves apparently received no lubrication, although with a long cut-off and partly closed throttle no trouble was experienced in oiling them. This was at first attributed to the increase in working pressure, but later it was found that the increased pressure was not the cause, and that the trouble was also present with lower pressures, though much less noticeable. To determine the source of the trouble, the following experiment was performed: A glass tube similar to a glass water gauge was connected to the oil pipe in such a way that the oil and steam from the lubricator had to pass through the glass just before entering the steam chest. This glass therefore afforded a means of investigating the action of the steam

and oil in the oil pipe during variations of pressure in the steam chest.

The experiment showed that while the throttle was closed the oil and condensed water passed freely into the steam chest, but that when the throttle was wide open, so that steam-chest pressure was nearly equal to boiler pressure, the glass began to fill up from the steam-chest end with water, upon which the oil of course floated, and was thus prevented from reaching the steam chest. As soon as a sufficient difference of pressure was established between the lubricator and the steam chest, by easing off or entirely closing the throttle, the oil and water were at once forced into the steam chest. In some of the tests it was observed that when steam-chest pressure was increased above 60 to 65 per cent. of the boiler pressure, the oil pipe began to fill with water, and thus retain the oil in the oil pipes; consequently, the valves would receive no oil as long as steam-chest pressure was greater than 65 per cent. of the boiler pressure. This, then, not only explains why the valves of an engine work hard after the engine has run for a time with wide-open throttle and short cut-off, but it suggests a means of relief under such circumstances. The relief alluded to may be obtained by reducing the steam-chest pressure below the oil-pipe pressure for a few seconds, so that the oil entrapped in the pipes will be discharged into the steam chest and oil the valves and cylinders. This may be accomplished by partly closing the throttle for 4 or 5 seconds. Of course, this does not prevent the oil from again being held in the pipes, but it offers a means of getting oil to the valves whenever they begin to work dry.

61. Tippett Attachment.—To insure a regular delivery of oil to the valves and cylinders, when the Detroit lubricator is used, a device known as the **Tippett attachment** is employed. Three views of this attachment and the necessary piping are given in Fig. 24, in which *L* is the lubricator. The attachment consists of an auxiliary steam pipe *A*, which leads from the stand pipe *E* to the expansion joint *D* in the boiler head. Outside the boiler the pipe *A* rises some distance above the oil pipes, as shown by the dotted lines behind the

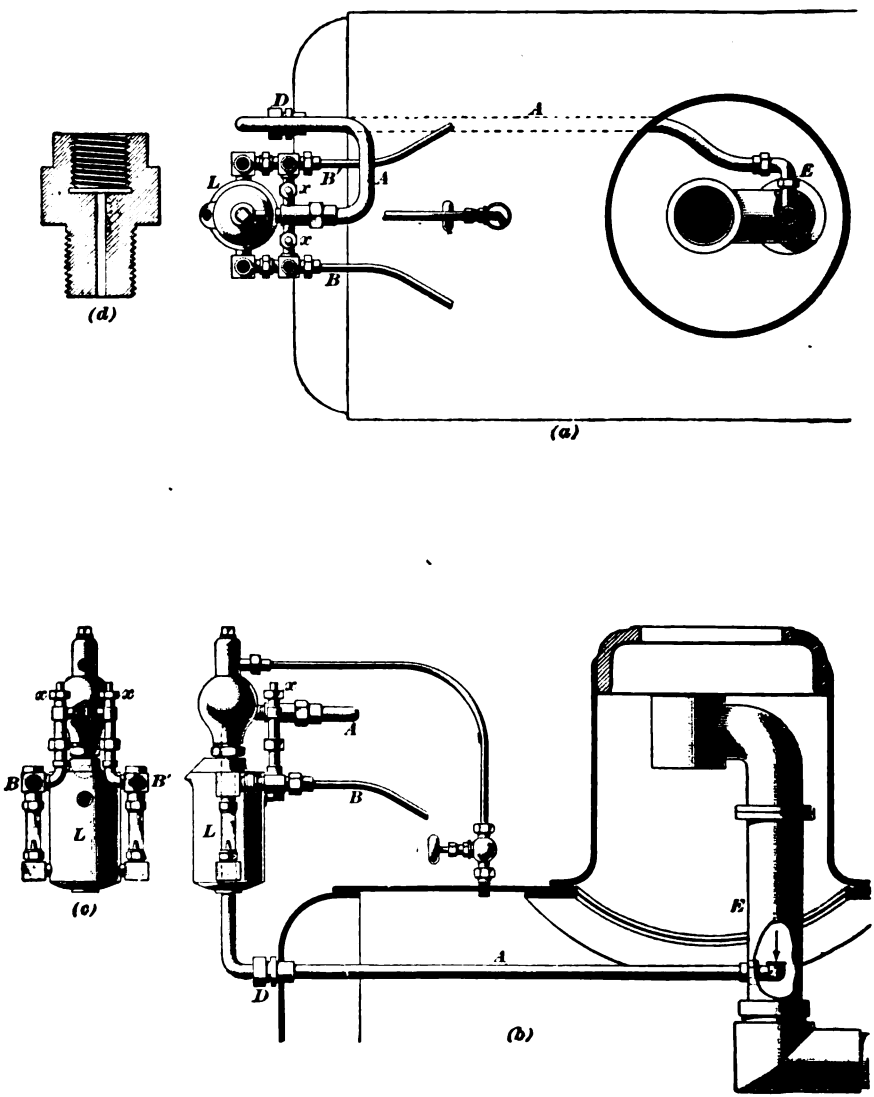

FIG. 24.

lubricator, view (*b*). It then bends around, as shown in view (*a*), and divides into two branches—one connecting with the oil pipe *B*, and the other with the oil pipe *B'*. A check-valve, not shown, is located at this junction, the purpose of which is to prevent oil going into the dry pipe, although steam can pass through it into the attachment. The lubricator *L* is supported as shown; each of the branch pipes contains a valve *x*. On the steam-chest end of the oil pipe is the oil plug shown separately in (*d*), the passage in the plug, through which the steam and oil pass, being $\frac{3}{16}$ inch in diameter; (*c*) is a view of the lubricator as seen looking from the dome in (*b*). When the lubricator is applied to a simple engine, both of the valves *x* should be wide open. When applied to a compound engine, the valve on the high-pressure side should be wide open, and the other valve should be closed tight.

This attachment operates as follows: When the throttle is opened, an extra quantity of steam is admitted into each oil pipe, through the attachment. This steam, together with that from the lubricator, is sufficient to maintain a current in the oil pipes towards the steam chests under the variations of pressure.

LOCATION OF LUBRICATOR.

62. The best location for the lubricator depends on the type of boiler and the position of the other cab fittings. When possible, it should be placed in such position that both the engineer and the fireman can see it plainly, as then any irregularities in its working are more liable to be readily noticed. If the engineer's seat is back of the boiler, the best location for the lubricator will be on top of the boiler at the end. When the engineer's seat is at the side of the boiler, the lubricator should be placed with the two engine cylinder feed-glasses in line with the boiler, and the air-pump sight feed and the oil gauge glass facing the engineer. Then, if a gauge light is placed on the lubricator bracket, the feeds will be in plain sight both day and night. The bracket that carries the lubricator should be strong enough to prevent vibration, as this tends to loosen the tubes and joints, making the action of the lubricator irregular.

PIPING FOR LUBRICATOR.

63. The piping of a lubricator is a very important consideration; it is frequently the cause of irregularities in the working of the lubricator, for which the latter is wrongfully blamed. It is of the utmost importance that full boiler pressure be maintained in the lubricator, and anything that prevents this will cause the action of the lubricator to be irregular. The steam pipe to the lubricator, therefore, should be large enough to maintain boiler pressure there under all conditions; and, to obtain the best results, the opening in the pipe, steam valve, and fittings should be fully $\frac{1}{2}$ inch in diameter throughout.

The steam connection of the lubricator was formerly made at the turret. This is poor practice, however, as the pressure at that point fluctuates considerably, and full boiler pressure cannot, in consequence, be maintained continuously in the lubricator. To avoid this, the steam connection may be made to the highest point of the boiler inside the cab, and a dry pipe used.

To obtain the best results, the oil pipes, steam-chest plug openings, and union connections should be of the same inside diameter throughout; the pipe should have a steady slope from the lubricator to the steam chest, so that, if necessary, the force of gravity alone would cause the oil to flow; and there should be no sags, bad bends, or contractions in the pipe at any point, as they will cause the oil to be held in the pipe until a sufficient difference of pressure is established between the lubricator and the steam chest to force the oil out.

CARE OF LUBRICATOR.

64. The lubricator should be cleaned out at least once every two weeks, by blowing steam through it. To do this, open all valves wide, keep the filling plug closed, and blow steam through the lubricator by opening the steam valve. This ordinarily will keep the lubricator clean. Some grades of oil, however, leave a residue which forms a gummy deposit that cannot be removed by blowing steam through the lubricator,

and this must be removed by immersing the lubricator in lye. The discoloration of the feed-glasses can be removed or prevented by swabbing the glasses out with glycerine. Strong, soapy water will have the same effect.

There are two reasons why the oil should be strained before filling the lubricator: (1) it prevents, to some extent, the formation of the gummy deposit just mentioned; and (2) it avoids the possibility of small pieces of dirt getting into the reservoir and stopping up some of the passages. The openings through which the oil must pass are, in some lubricators, only $\frac{1}{32}$ to $\frac{3}{64}$ inch in diameter, so that, if the oil were at all dirty, these openings would soon become choked and prevent the feed from operating. It is best not to entirely fill the reservoir with oil, as the expansion due to heat may force some of the oil into the condenser, and, in some styles of lubricator, into the boiler also.

INDEPENDENT AIR-PUMP LUBRICATORS.

65. The Nathan Lubricator.—The Nathan independent air-pump lubricator is shown in Fig. 25, (*a*) being a section and (*b*) an elevation. Connection is made at *A* with the air-pump supply pipe, so that, when the steam valve *S* is open, steam passes up through *Y* and the condenser tube *34* into the condenser *1*. Steam can also pass through the choke plug *5* into the upper feed-arm, so that the pressure above the water in the glass is equal to the pressure in the condenser. The condenser remains nearly full of water, which can pass down into the reservoir through the water pipe *23*. The oil in the reservoir is thus raised up and forced down into the oil pipe *22*, as shown by the arrows. When the regulating valve *18* is opened, the head of water in the lubricator forces the oil through the valve; it then floats to the surface of the water in the glass, and and is carried through the choke plug *5* into the passage *Y*, where it passes down to the steam-supply pipe by the force of gravity.

To start this lubricator, open valve *S*, and regulate by means of valve *18*. The lubricator may be stopped by closing valves *18* and *S*.

To refill the reservoir, close valves *18* and *S*, draw off the water from the reservoir through the drain cock *d*, and fill with clean strained oil, by removing the filling plug *2*. A broken glass may be replaced by removing the plug *33*.

About once every two weeks, the lubricator should be blown out with steam. This is accomplished by opening the drain cock *d* and valves *18* and *S*.

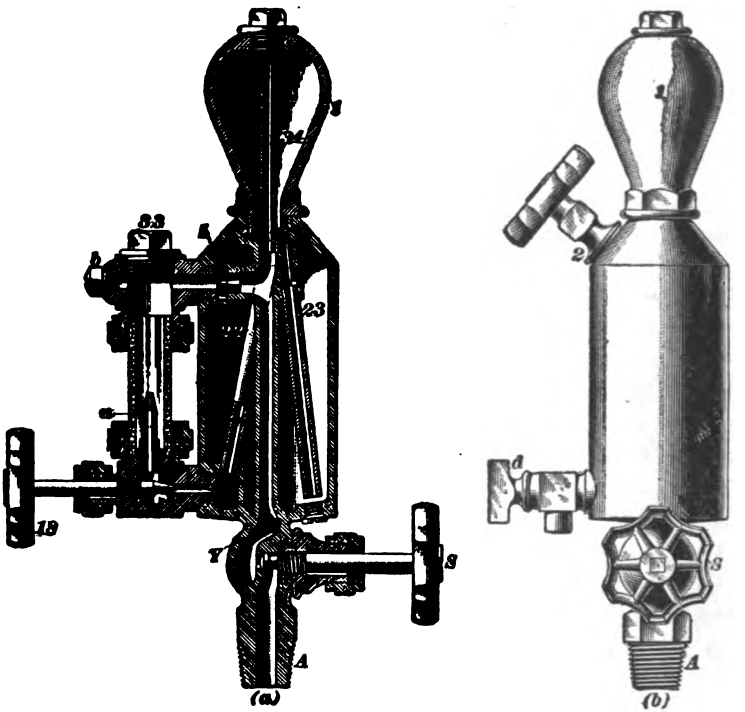

FIG. 25.

To clean out the choke plug *5* when stopped up, remove blow-out plug *b*, close the valve *18*, and open the valve *S*.

To clean out the feed-nozzle *n*, remove blow-out plug *b*, and open valves *18* and *S*.

Sometimes the condenser *1* becomes charged with air so as to exclude the steam and prevent the formation of condensed water, which stops the operation. To again start the lubricator

operating, unscrew the plug in the top of the condenser until steam works out around the joint: the air will then be expelled, after which the joint can be made tight again.

66. The Detroit Lubricator.—In Fig. 26 is shown the

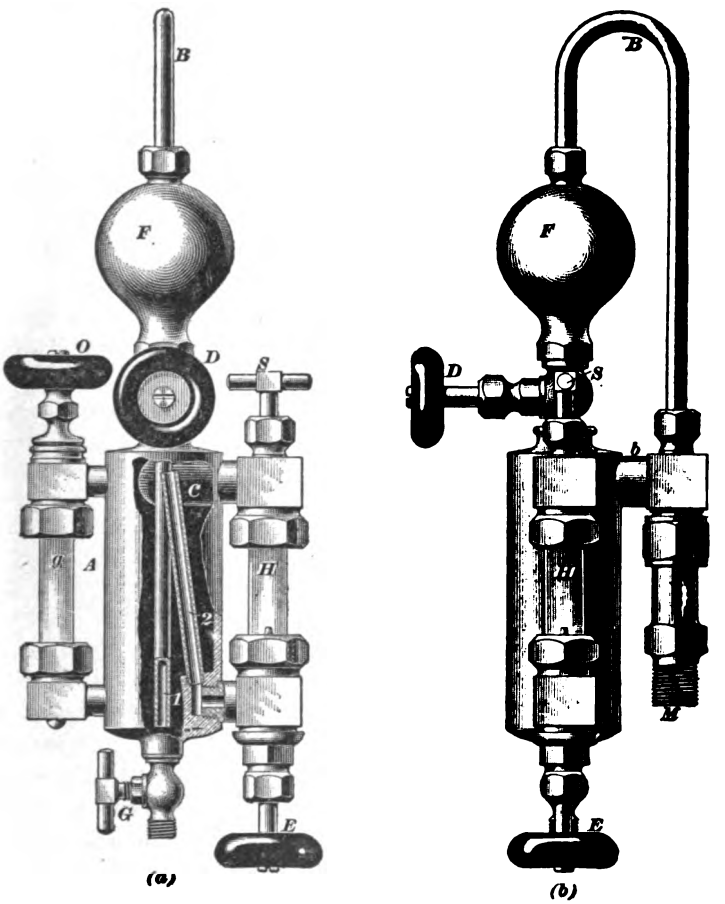

FIG. 26.

Detroit No. 1 improved air-pump lubricator, view (*a*) being a part section, and (*b*) an elevation. *A* is the oil reservoir, broken away in view (*a*) to show the arrangement of the water tube *1* and the oil tube *2*. *H* is the sight-feed glass; *g*, the oil

gauge glass; *D*, the water valve; and *O*, the filling plug. Connection with the air-pump steam-supply pipe is made at *M*, steam passing up through the tube *B* into the condenser *F*. Steam also passes through the connection *b* and a passage *C* in the casting to the upper feed-arm, thus maintaining a pressure in the feed-glass *H* equal to the condenser pressure. The condenser fills with water, which, when the water valve *D* is opened, passes down to the bottom of the reservoir and forces the oil upwards, and so into and down through tube *2* and the regulating valve *E* into the feed-glass, whence it passes down through the supporting post *M* to the air-pump steam pipe. *S* is the safety check-valve.

To *start the lubricator*, open valve *D* and regulate the feed by means of valve *E*. To stop, close *E*.

The *reservoir is filled* by means of the filling plug *O*. To blow out the cup with steam, close valve *D*, and open valve *E* and drain cock *G*.

If air collects in the condenser *F*, as explained with the Nathan lubricator, slack off the union nut until the lubricator is relieved of air, and then tighten the nut.

SAND BOXES.

HAND SANDERS.

67. General Description.—One of the necessary attachments of an engine is a **sand box.** This is usually placed on top of the boiler so that sand can flow down through pipes on each side of the boiler and be delivered to the rails in front of the driving wheels. On switch engines, two of these sand boxes are sometimes used, one for the front pair of wheels and another for the back pair, so that sand can be put on the rails for all the drivers, no matter which way the engine is moving. In a very few instances the sand boxes are placed below the running board, in which case two are needed, one for each rail.

68. Construction and Operation.—A sectional view of a sand box, the valves of which are operated by hand by means of a lever and reach rod, is shown in Fig. 27 (*a*), while

a bottom view, showing the mechanism for operating the valves, is shown in view (*b*). The sand pipes leading down to the rails in front of the driving wheels connect with the sand box at *x*, while a port *a* leads from the sand chamber *A* to the connection *x*.

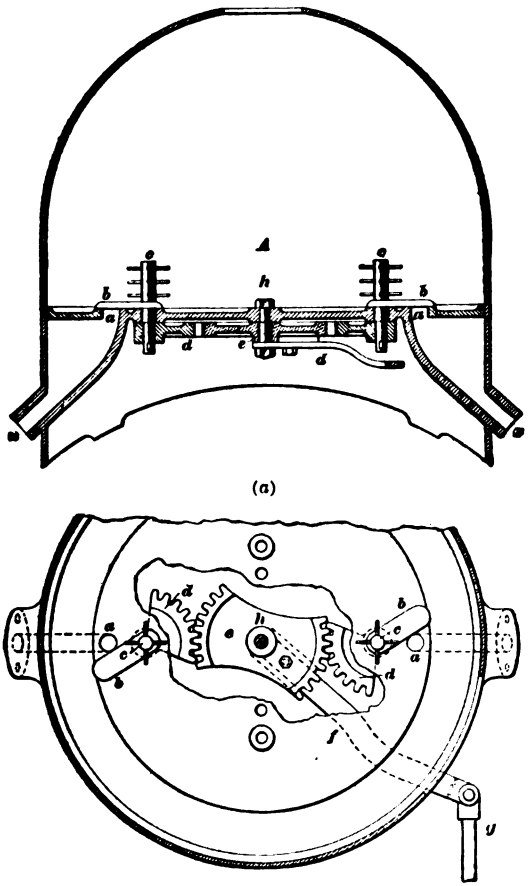

FIG. 27.

The opening through port *a* is controlled by the valves *b*; these valves are rigidly connected with the toothed segments *d* by means of the shafts *c*. The toothed segment *e* is rigidly connected to the lever *f*, which is operated by a reach rod *g*,

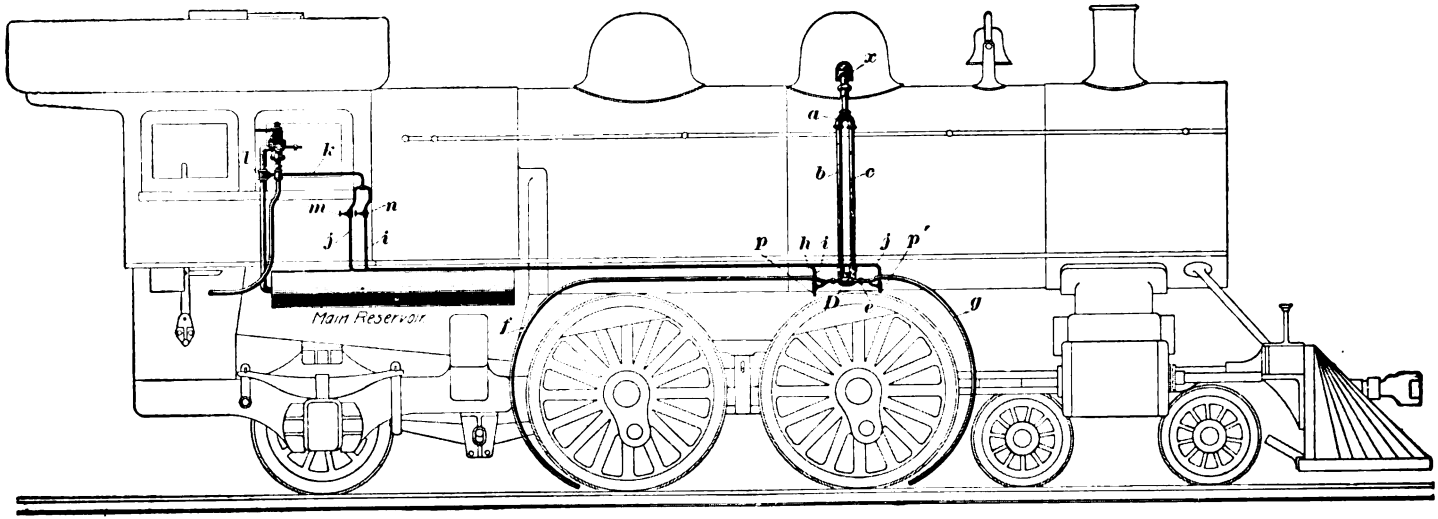

FIG. 28.

extending back into the cab. By moving the reach rod the segment *e* is made to rotate around the point *h*; this movement causes the segments *d* to rotate and thus open or close the valves *b*, depending on the direction of the movement. When the valves *b* are opened, sand flows by gravity from the sand box *A* through the sand pipes to the rail. This method of sanding the rails is not very satisfactory, for the reason that the sand is delivered with so little force that in windy weather it is liable to be blown to one side of the rail instead of being delivered to the driving wheels; besides, it is wasteful of sand, and there is practically no means of regulating the amount of sand delivered; hence, air sanders, which have a more positive action, are coming into general use.

AIR SANDERS.

69. General Description.—Sanders that force the sand to the driving wheels by means of a jet of compressed air are called **air sanders.** There are several types of air sanders in use, but as they all operate on about the same principle, only the **Leach** sander will be described.

In Fig. 28, a Leach sander known as the *D* double sander, is shown applied to an Atlantic type engine. A pipe connection is made to the sand box at *x*, and a short pipe connects this with the **A** fitting *a*, which should be located as high up on the boiler as practicable in order to have as high a column of sand above the trap *D* as possible. Two sand pipes, *b* and *c*, connect *a* with the double trap *D*; this trap, as its name implies, is two traps in one case, one trap for the discharge pipe *f* and the other for the discharge pipe *g*. The air nozzle *e* is connected to the air pipe *j* and discharges sand through the discharge pipe *f*; another air nozzle *h* back of the pipe *f* is connected to the air pipe *i* and discharges sand through the pipe *g*. The air pipes *j* and *i* are connected to the brake valve main-reservoir connection at *b*, so that the air pipes draw their supply from the main reservoir. The two cab valves *m* and *n* control the flow of air through the pipes; hence, they operate the sander. To force sand through the pipe *g* in front of the drivers, open valve *n*; to force sand through the pipe *f*, open the valve *m*.

The discharge pipes should be so bent as to deliver the sand direct to the point of contact of the driving wheel and the rail, as by so doing less sand need be used to be effective.

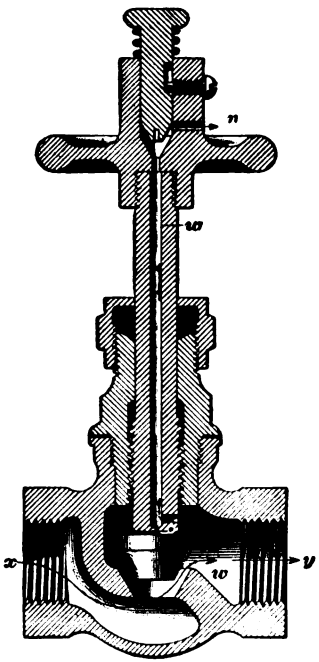

FIG. 29.

70. Cab Valve.—The cab valve is illustrated in Fig. 29, in which part of the valve case is broken away and the valve and valve stem sectioned to show the warning port *w*. The pipe from the main reservoir connects at *x*, while the pipe leading to the sander connects at *y*, so that the air passes from *x* to *y*, as indicated by the arrows; also, when the valve is open, there is a discharge of air through the port *n*, as indicated by the arrows, that makes a noise which warns the engineer that the sander is in operation, thus preventing his forgetting to shut it off.

71. Air Nozzle.—The extension air nozzle used with this sander is illustrated in Fig. 30, in which *p* is the adjusting tube, *v* a check-valve, and *j* the air pipe leading to the main reservoir. The port *s* in the union tail-

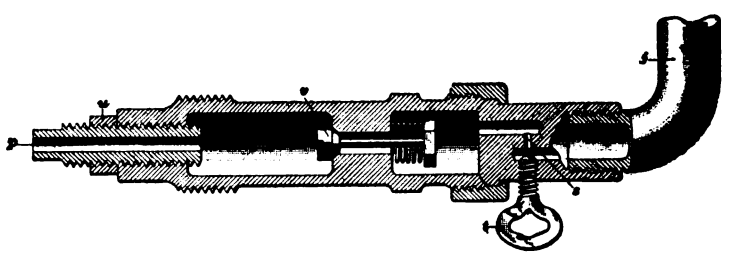

FIG. 30.

piece is $\frac{3}{32}$ inch in diameter and forms the air jet. The check-valve *v* prevents sand passing back into the air port *s*, stopping

it up, while the thumbscrew *t* permits of the port *s* being cleaned out should it become stopped up.

72. Operation of Sander.—An assembled view of the sanding device is shown in Fig. 31, in which all the parts have the same letters as in the previous figures. In this view the

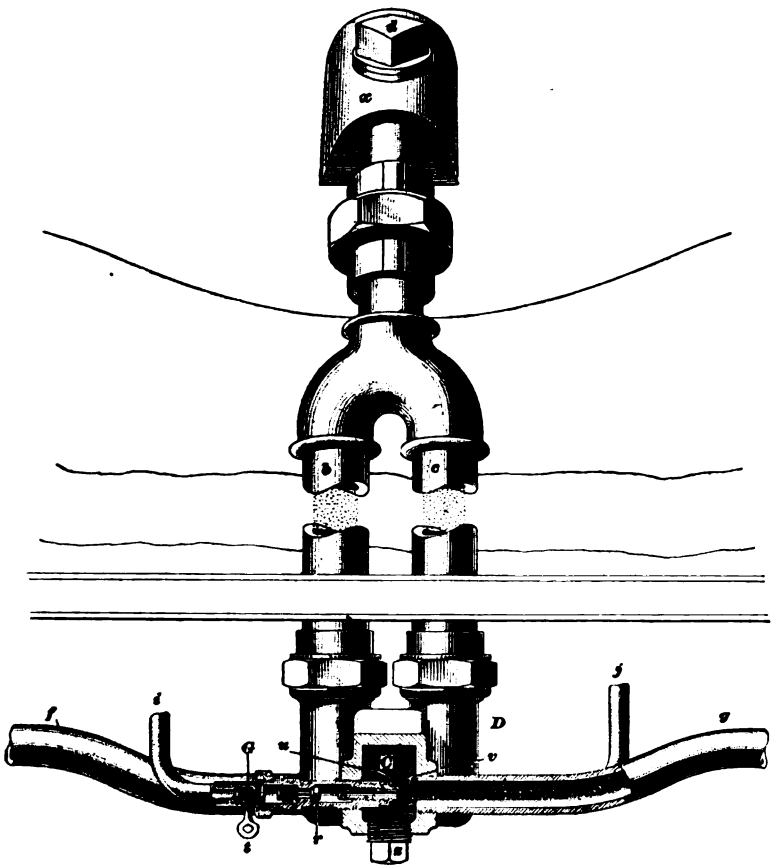

FIG. 31.

pipe *f* and its nozzle are shown in section, whereas the pipe *g* and its nozzle do not show, since they are behind. The sand pipe *c* connects with a chamber *C* in the trap *D*, while the sand pipe *b* connects with a similar chamber; these chambers,

however, have no connection with each other, one being used for each discharge pipe. Sand from the sand box flows down through the pipes *c* and *b* and keeps the chambers full, some of the sand finding its way into the discharge pipe, as shown. The pipes are bent up at angle of 15 degrees, to prevent the sand jarring out of the traps when the engine is running. The resistance of the column of sand in the pipes *b* and *c* is such as will permit of considerable air pressure being used to force any obstruction out of the discharge pipe without permitting the air to escape up into the sand box. When it is desired to use sand through the pipe *f*, air is admitted into the pipe *j*, from whence it passes through port *s*, the check-valve *r*, and the adjusting tube *p*, into the pipe *f*, forcing the sand out through the pipe. As the sand is forced out, more flows in from the chamber *C*, and a continuous stream is thus forced out of the discharge pipe. The amount discharged is regulated by the clearance *v*; increasing or decreasing this by loosening the jamb nut *u* and moving the adjusting tube as required. These nozzles on both sides of the engine should always be adjusted alike, so that they will deliver the same amount of sand.

The inch plug *z* is for the purpose of removing small stones, etc., that may get into the trap and interfere with the operation of the sander. Before this is removed, however, the hand-lever valve in the box must be closed; or, if not provided, the plug *d*, Fig. 31, in the sand-box lug, should be removed and a piece of waste inserted to stop the flow of sand to the trap *D* while it is being cleaned.

The operation of the sander for the pipe *g* is the same as that just described.

The pipes *p* and *p'* are the air pipes leading to the opposite side of the engine; they furnish the air necessary for the operation of the sanding devices on the opposite side of the engine.

In most cases, engines are furnished with both hand and air sanders, the former being used in case the air sander becomes inoperative.

73. Care.—Sand intended for use in air sanders should be well screened to remove small stones and any foreign matter

that may interfere with the proper operation of the sander; also, the sand should be properly dried before using, since if damp it will not run freely, and if wet may plug the pipes and passages. It is essential, therefore, that all pipe joints be properly tightened so as to be water-tight, and the main reservoir must be drained frequently to prevent moisture from that source being carried into the trap and so affect the operation of the sander.

This sander is placed underneath the running board so as to be easily accessible, and it should be inspected frequently enough to insure its being kept in good working order.

74. Troubles.—Sometimes, when the sand has not been properly screened, small stones accumulate in chamber *C* of the trap *D*, and restrict or entirely prevent the flow of sand into the discharge pipe; or, the sand in the trap may be so wet as not to flow. In either case, if the sand outlet from the sand box can be closed by the valve in the box, do so; if it cannot, remove the plug *d*, Fig. 31, and insert sufficient waste to stop the flow of sand from the box; then remove the plug *z* and clean out the trap.

In the event of the thumbscrew *t* being lost, there will be a bad blow at that opening during the time the cab valve is open, and no sand will be delivered through the discharge pipe, as there will not be sufficient pressure to force it through. This may be remedied by screwing a hardwood plug into the opening, taking care not to screw it in so far that it closes the small air port *s*.

If the air port *s* becomes stopped up, the sander will not work, as no air can come through into the nozzle to force the sand out of the discharge pipe. In that event, remove the thumbscrew *t* and clean out port *s*.

BOILER FEEDING AND MANAGEMENT.

WATER CIRCULATION.

75. Radiation, Conduction, and Convection.—Heat is transferred from one point to another in three ways: by *radiation*, by *conduction*, and by *convection*.

When one body appears to impart heat directly to another at a distance, the heat is said to be transferred by **radiation.**

When heat is transmitted from points of high temperature to points of low temperature, by passing from one particle of a body to the next particle, and so on, it is said to be transmitted by **conduction.** This is the mode by which heat is transmitted through solid bodies, the metals being the best heat conductors.

If a portion of a liquid is heated above the temperature of the surrounding portions, it expands and is thus made lighter. This causes it to rise up, while the cooler and, consequently, heavier portions rush in from all sides to take its place. As the heated liquid rises, it comes in contact with cooler liquid, with which it shares its heat, and in this way all the liquid becomes heated. This mode of transmitting heat by the motion of heated fluids is called **convection,** and the currents thereby induced are called *convection currents.*

76. Illustration of Terms.—An idea of the difference in the modes of conveying heat by conduction and by convection may be obtained by the following illustration: Suppose a pile of sand had to be conveyed to a point, say, 100 feet away, and that a number of men were stationed at short intervals between the sand and the point of delivery. If the first man filled a pail with the sand and it was passed along the line to the point of delivery, the mode of conveyance would illustrate *conduction.* If, on the other hand, each man had a pail that he filled at the sand pile and then carried to the point of delivery, the mode of conveyance would illustrate *convection*, and the stream of men

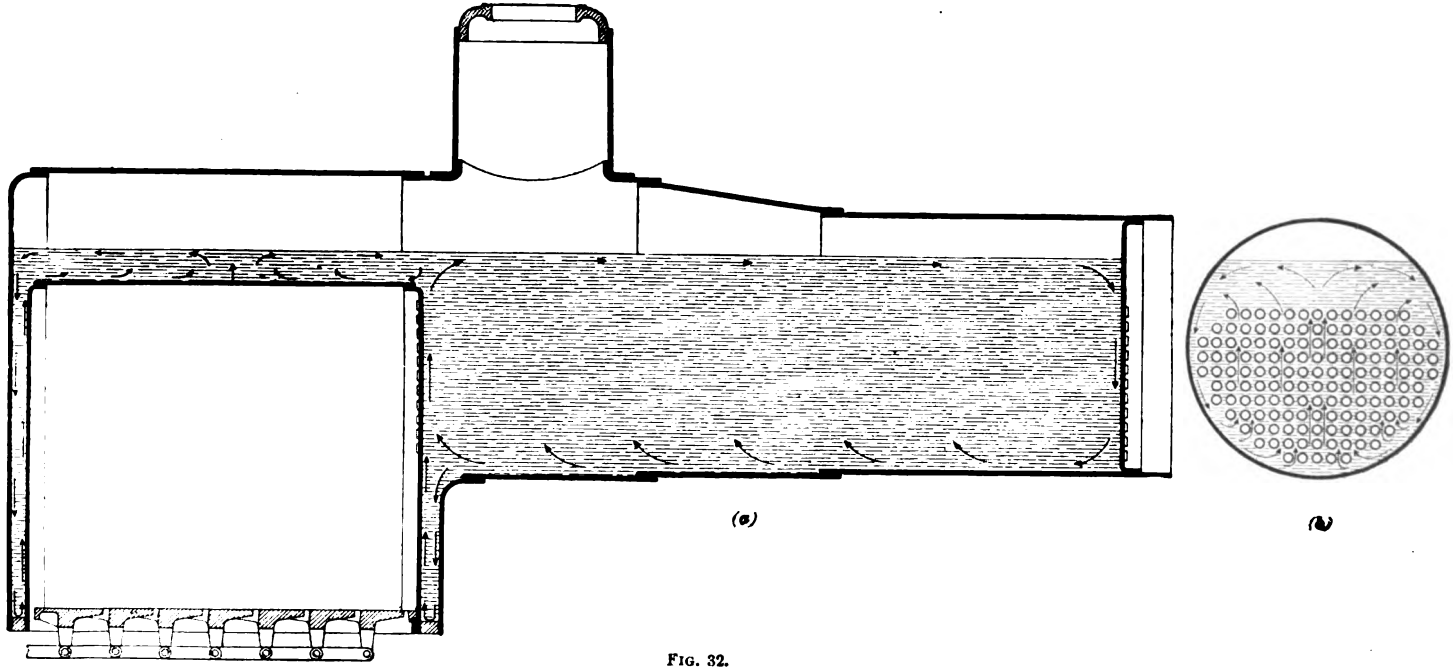

FIG. 32.

passing back and forth would represent the convection currents. With the exception of the liquid metal, mercury, the heat-conducting power of liquids and gases is very low, and heat is transmitted through them chiefly by convection.

It is due to this principle of convection that the water in a boiler is caused to circulate, and the rapidity with which heat will be absorbed from the heating surfaces depends on the effectiveness of the circulation in the boiler.

77. Circulation in Boiler.—Proper circulation of the water is essential to the efficient operation of a boiler, as it tends to keep all parts at a uniform temperature, and therefore is a safeguard against overheating. Besides this, when the circulation is good, it prevents to some extent the deposit of lime that accumulates from the feedwater. The circulation of water in a boiler is illustrated in Fig. 32, where (*a*) is a longitudinal section and (*b*) is a cross-section. The motion of the currents is shown by the arrows. The heated currents rise and carry the bubbles of steam to the surface, the cooler water rushing in to take their places over the heating surface, and thus the circulation is maintained. View (*a*) shows the hot water rising up and flowing towards the front end, while the cooler water sinks and flows towards the rear end. In view (*b*) the warm water is seen flowing up between the flues, and the cold water flowing down in the space between the flues and the shell of the boiler. Since the cooler water flows towards the rear end, the circulation is aided by introducing the feedwater as far ahead as possible. This, however, is not the chief reason why the boiler checks are placed so far ahead in locomotive boilers; when the water is introduced near the front end, it is heated considerably before it comes in contact with the hot firebox sheets, which, therefore, are not subjected to such sudden contraction as would otherwise be the case, and hence are less liable to leak or crack. Also, the coolest water circulates around the front end of the tubes in which the gases are about to pass out into the smoke arch, and thus the greatest amount of heat is absorbed from the gases by the water.

FEEDING THE BOILER.

78. General Remarks.—It is not altogether advisable to attempt to maintain a **constant height** of water in the boiler when dealing with *short* grades, for the following reasons: If such were done, the injectors would have to be worked so as to supply water at just the same rate at which it was being used. In other words, when the engine was doing the least work, the least amount of water would be injected into the boiler, while at times when it was working at its full capacity, the greatest quantity of water would be injected.

Now, as it requires from 20 to 30 horsepower to operate the injector at about its maximum capacity, and as this steam must be supplied by the boiler, it is evident that operating the injector to its full capacity has the effect of considerably reducing the capacity of the boiler. So long as the engine is working light, this reduction of boiler capacity makes no difference, but, at such times as the engine has to exert its maximum pull, the reduction referred to becomes a serious matter.

Working the injector at such times has also another bad effect: When water is fed into the boiler while steam is being used, the fire has to supply the heat necessary to raise this water to the steaming point under boiler pressure, in addition to supplying the heat that the engine converts into work. Now, if the water is injected into the boiler at the same rate that it is being used, then, the harder the engine is working, the more heat must be used in heating the water injected, so that there will, consequently, be a less amount of heat for conversion into work in the cylinders. This has the same effect as though the capacity of the boiler were still further reduced. The result is, that no matter how much the fire is forced, the steam pressure will fall. Not only, therefore, is fuel wasted through the forced firing, but the fall in pressure again makes a reduction in the power of the boiler. It is more expedient and economical to feed the boiler when the engine is not working steam, or when it is working well within its capacity, and advantage should be taken of all such occasions to increase the water supply. These remarks as to maintaining a constant height of water do not

apply to cases where, owing to the hill being of great length, or for other reasons, the engine has to work her hardest for prolonged periods. In such cases, the rate of feed must be maintained equal to that at which the engine is using the water.

No hard-and-fast rule can of course be given for feeding a locomotive boiler, since so much depends on the nature of the track, the train load, and other conditions that are seldom the same in any two cases; yet if the principles of boiler feeding are thoroughly understood, the exercise of one's judgment will generally result in the right thing being done in any given case.

79. Economical Feeding.—A good plan when practicable is to fill the boiler up during intervals when the engine is not working or is working well within its capacity, shutting off the injector, if possible, during such times as the engine is called on for an extra effort, such as starting a train away from a station, relying for the time being on the supply in the boiler. In such a case, having a sufficient supply of water heated and stored in the boiler to last while the engine is working hard, the injector may be shut off. It will be much easier, therefore, to maintain steam pressure during the heavy pull, and, by forcing the fire, steam can be generated at a much greater rate. In this way, the boiler can be worked to its utmost steaming capacity, which will enable the locomotive to deal with loads that would stall it were the injector working.

80. Ascending a Grade.—In most cases, however, it will be necessary to supply water continuously to the boiler while the engine is working hard, as, for instance, while ascending a long grade. The best plan under such circumstances would be to have the boiler as full as practicable when beginning the ascent; then adjust the feed so that, when the engine pitches over the summit, there will be sufficient water left to protect the crown sheet. The boiler should be refilled while on the descent, a good bright fire being maintained while feeding, to prevent chilling the heating surfaces.

81. Height of Water.—It is better to carry a moderately **high**, rather than a **low**, water level, for the following reasons: (1) With a good supply of water in the boiler, the

feedwater will have less cooling effect, and both the temperature of the water and the steam pressure will remain more nearly uniform. (2) If the injectors should fail, the larger volume of water will allow more time for examination and repair of the injectors before it becomes necessary to draw the fire. (3) It enables the engineer to shut off the injector for a short interval, and thus favor the fireman when necessary. In fact, the feeding and firing should be worked in harmony; the fireman should keep a good bright fire whenever the injector is working, and the engineer should feed the boiler in such a way as to assist the fireman as much as possible.

FOAMING AND PRIMING

FOAMING.

82. When certain impurities are present in the boiler, they cause the water to **foam** and suds to form on its surface. **Foaming** may be due to the presence of impurities, such as alkali or soda in excess, grease, soap, some kinds of oil, and such other substances as will cause the formation of suds. It is always indicated by the rapid rising and falling and "riled" appearance of the water in the gauge glass, and, generally, by water discharging from the stack. The valves become dry, and jerk and rattle the reverse lever, and in some instances, the valves or pistons groan and squeak, showing that the oil has all been washed away, and that the parts are dry and cutting. Foaming affects the reading of the water gauges, and makes them indicate too high a level; there is danger, therefore, of the crown sheet being overheated, and for that reason the true water level should be ascertained the instant that indications of foaming appear. To determine the true water level, close the throttle valve slowly; if the water level is high, and it remains at the same height when the throttle is closed, it indicates that the boiler has been overpumped rather than that it is foaming; if the water level shows a decided drop when the throttle is closed, the boiler is most likely foaming. In this case, open the cylinder cocks, to protect the cylinder heads; place the reverse lever in full gear, and keep the throttle partly open, so

as to keep the train moving; then put on both injectors, open the surface blow-off cock, if there is one, and try to blow off the bad water. Close the throttle frequently, to see whether the water is being worked off faster than the injectors are supplying it, as such a contingency would endanger the crown sheet.

In using the bottom blow-off cock, there is always danger of its being held open by a piece of scale or mud. In this emergency, put on both injectors, so as to hold the water level, if possible, until the fire has been drawn.

PRIMING.

83. Causes of Priming.—When fine particles of water are carried by the steam from the boiler into the cylinders, the boiler is said to **prime.**

Priming may be caused: (1) by insufficient steam space, due either to the design of the boiler or to the water being carried too high; (2) by the water foaming; (3) by a sudden release of the pressure, due to the throttle being opened quickly or the safety valves blowing off; or (4) by poor circulation of the water. The water next to the heating surface is always the hottest; therefore, steam is first generated near the heating surface. This steam forms little bubbles, which are prevented from expanding as they rise by the resistance offered by the water. As the bubbles approach the surface, the water exerts less and less resistance to the expansion of these steam bubbles, until, finally, the resistance becomes less than the expansive force, and the bubbles explode and throw small particles of water up into the steam space. Now, when the throttle is open, the steam rushing into the dome tends to carry this water spray with it, just as the wind tends to pick up and carry dust off the ground. The more spray thrown up from the body of the water, or the greater the flow of steam to the dome, the greater will be the tendency to prime. If the water level is high, the steam will have a shorter distance to raise the spray, and the flow of steam will be confined to a smaller space; consequently, the priming will increase.

If the throttle is opened quickly, it reduces the pressure considerably on the water just under the dome. This causes a

greater flow of steam bubbles from all parts of the heating surface to the point under the dome, and, consequently, the spray at that point is greatly increased, which induces priming.

84. Indications of Priming.—The fact that a boiler is priming is indicated by the peculiar flat sound of the exhaust, by water discharging from the stack, and by the color of the steam as it discharges from the top gauge-cock.

Steam is a colorless, invisible gas. The white vapor seen coming from the exhaust is not steam, but fine water particles formed by steam condensing. Steam occupies the space above the water in the glass water gauge, although, since it is invisible, the space seems to be empty. If dry steam issues from a gauge-cock, it cannot be seen for at least an inch from the cock, after which it becomes gradually whiter and whiter the farther it is from the cock. Wet steam appears as a dense white cloud from the moment it issues from the cock, and its color is about uniform throughout, due to the water particles it contains.

As soon as priming is noticed, the cylinder cocks should be opened, to protect the cylinder heads. The cause should then be ascertained and remedied.

85. Effects of Priming.—Priming produces a number of bad effects: (1) It washes the oil from the valves and cylinders, thereby causing the reverse lever to work hard, and the valves and cylinders to cut; also, power is lost, as it requires additional force to overcome the greater frictional resistance. (2) It endangers the cylinder heads, as water is incompressible. (3) Wet steam has less expansive power than dry steam, and does not flow as freely. This causes a reduction of initial pressure, and increases the back pressure, both of which cause a waste of power. (4) The hot water carried away with the steam does no useful work, the heat it contains being wasted; also, being cooler, it condenses steam with which it comes in contact.

Priming, therefore, is wasteful and should be prevented if possible, as it affects the coal and oil records very materially. It is not a good plan to let the engine slip while water is being worked through the cylinders, as it is liable to cause damage to the engine.

LOW WATER.

86. Occasionally, through carelessness or otherwise, the water level is allowed to get dangerously low, and then there is serious trouble. It is very rare, however, that this event is due wholly to carelessness, as no man courts the disgrace of having "scorched" his engine. The trouble is generally with the feeding apparatus. If the injectors fail to work, close the dampers and bank the fire with fine green coal. It is better to deaden the fire in this way rather than to knock it out, if the water is very low, as the temporary increase in temperature occasioned by drawing the fire may aggravate the trouble. After the fire has cooled down considerably, it may be knocked out if necessary. In that event, if the weather is cold, the boiler must be drained of all water, to prevent damage by freezing. Empty the tank and leave both tank hose uncoupled, drain all pipes and also the lubricator, and then prepare to be towed in. Of course, the train should be fully protected from the beginning.

If the cause of the trouble has been found and remedied, and water is close by, it may be possible and desirable in some instances to fill the boiler sufficiently through the safety-valve opening in the dome to protect the crown sheet until steam can be raised and the injector operated. If another engine is handy, the boiler may possibly be filled in one of two ways, namely: (1) if there is sufficient hose at hand, connect it to the delivery pipe of the injector of the live engine, and force water into the dead engine through the opening made by removing the safety valve or whistle; or, (2) plug up the whistle opening and the relief valves in the steam chests, and any openings that would prevent a vacuum being formed in the boiler; close the overflow valve; open the steam and water valves on the injector; open the engine throttle, and place the reverse lever in full gear in the direction the engine is to go, and then tow the engine along by means of the second engine.

The cylinders will thus act as air pumps, pumping the air out of the boiler and producing a vacuum there. Atmospheric pressure will then force water from the tank into the boiler.

The piston rings and everything around the boiler must be air-tight, however, or else sufficient vacuum cannot be formed and the scheme will not work.

OIL IN BOILER.

87. Its Effects.—The effect of oil in a boiler depends entirely on its nature. Some oils, as kerosene, have a good effect, as they tend to soften and remove scale; while others, such as valve oil, lard oil, rape-seed oil, grease, and, in fact, all animal and vegetable oils, are very injurious, as they not only cause foaming, but may also give rise to overheating of the flues or crown sheet. The solid portion of the impurities in the water is precipitated when the water boils, uniting with the organic matter of the oil (if animal or vegetable) and producing a thick paste-like formation that sticks to the flues and sheets wherever it comes in contact with them. This deposit is a poor conductor of heat, and, when adhering to the heating surface, it will neither pass the heat on to the water nor permit the water to come in contact with the heating surface to absorb it; the result is that the parts coated by this deposit are overheated.

88. Mineral Oil in Boilers.—Mineral oils do not possess the above disadvantage of animal oils, and, when properly used, have a good effect both in preventing and also in removing many kinds of scale. Some grades of black oil have been used for this purpose with fairly good results, but, if used in very large quantities, the oil may cause overheating. Kerosene oil has been used with very good results on some roads, and it has not only proved a prevention, but has also been effective in breaking up and loosening hard scale after it has formed. To derive the full benefit from the use of oil for the present purpose, it should be introduced drop by drop with the feedwater. The oil thus fed is carried to all parts of the boiler, and the danger of overheating from its use is reduced to a minimum. It is claimed by those who have used kerosene in stationary boilers that 1 quart a day per 100 horsepower will keep boilers free from most scale formations.

If, by any means, animal or vegetable oil gets into the tank, the heaters should be used to assist in raising the oil off the surfaces inside the tank, and, at the first opportunity, the tank should be flooded for a considerable time, to pass it off.

SCALE AND MUD.

89. Incrustation, or **scale,** as it is usually called, is the deposit formed in a boiler by the precipitation of mineral substances that have been dissolved by the feedwater, or by the settling of mud or earthy matter that has simply been held in suspension in it. These substances accumulate and bake into a hard scale, which may cover the heating surface with a layer $\frac{1}{4}$ to $\frac{1}{2}$ inch in thickness. Now, a *thin* coat of scale may be of advantage if the feedwater tends to corrode the plates, as it protects the latter to some extent, but a thick coat is both wasteful and dangerous. Some experiments performed to determine the effect of scale on the economy of boilers seem to show that, with a layer of scale $\frac{1}{16}$ inch thick on the heating surface, about 15 per cent. more coal must be used, while, with thicker layers, the required increase in coal is proportionally greater. The scale acts as a non-conducting coat to the heating surfaces, and, consequently, not only wastes heat but tends to cause the surfaces to overheat.

The carbonates and sulphates of lime, and also carbonate of magnesia are the most troublesome of scale-forming substances. Carbonate of lime, such as marble and other forms of limestone, dissolves in water that contains carbonic acid. When the water is heated, the carbonic acid is driven off, and the carbonate is precipitated in the solid form. Carbonate of magnesia acts in a similar manner. Sulphate of lime is completely insoluble in water at a temperature of 300° F., so that, if the feedwater is heated to about that temperature, the greater part of the scale-forming materials will be precipitated in the solid form. Scale formed from carbonate of lime is soft and granular, while that formed from the sulphate is hard and crust-like. Organic substances in combination with carbonate of lime make a hard and troublesome scale.

PREVENTION OF SCALE.

90. The Railway Master Mechanics' Association has estimated the losses due to scale, such as loss of fuel, extra repairs, etc., to amount to about $750 a year for every locomotive in the Middle and Western States. It is evident, therefore, that the formation of scale and the means of prevention are matters of considerable importance.

The formation of scale may be prevented: (1) by separating the scale-forming substances from the feedwater before it is fed into the boiler; or (2) by removing the soft scale from the boiler before it bakes into a solid crust. This second method of prevention will now be considered.

When the scale is formed from sediment, mud, clay, or readily soluble salts in feedwater, a frequent use of both surface and bottom blow-off cocks will keep the boiler comparatively free from scale. When formed from the carbonates of lime, magnesia, or iron, we may employ caustic soda, lime, or magnesia to prevent the formation of hard scale. When the scale is formed from sulphate of lime, carbonate of soda should be introduced into the boiler. In this case, the sulphate and soda combine and form a sulphate of soda that is soluble, and a carbonate of lime that forms a soft scale that can easily be blown out. Carbonate of soda (soda ash is an impure form of carbonate of soda) should not be introduced in large quantities at a time, however, as it may cause foaming. Some organic substances that contain tannic acid, such as the bark from oak or hemlock, and sumac, logwood, etc., have been used in some instances and found effective in loosening or preventing scale formed from carbonates of lime or magnesia; but tannic acid is very liable to cause corrosion, and, for that reason, it had better not be used.

Kerosene oil, as already mentioned, has been found useful in preventing and removing scale.

CORROSION.

91. Forms of Corrosion.—Corrosion, or eating away, of the boiler plates is due to the chemical action of impure water. It is very destructive in its action, and shortens the

life of a boiler very considerably. Corrosion presents itself in three forms:

1. *Uniform corrosion*, in which large areas of plate waste away, there being no sharp line of division between the corroded part and the sound plate. In some such cases, it is necessary to drill a hole through the suspected plate and measure its thickness.

2. *Pitting*, or *honeycombing*, which can be readily detected, as the plates are eaten away in spots, and are indented with

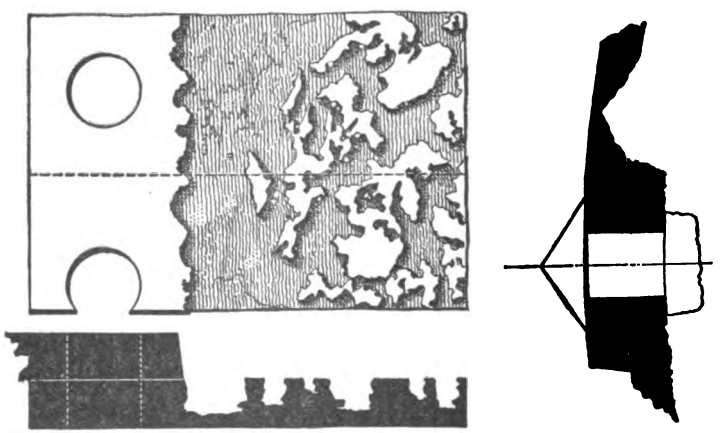

(a) (b)

FIG. 33.

holes and cavities from $\frac{1}{32}$ to $\frac{1}{4}$ inch deep. The appearance of a pitted plate is shown in Fig. 33 (*a*).

3. *Grooving*, which is generally caused by the plates buckling at the joints when under pressure; this starts a small crack that is acted upon by the corrosive agents in the water, and soon deepens into a groove along the seam, as shown in Fig. 33 (*b*). Grooving is sometimes the result of careless workmanship in calking, the sharp calking tool leaving a mark all along the seam, which acts as a small crack to start the grooving.

92. Causes of Corrosion.—The following are some of the impurities that will cause corrosion in a boiler: (1) Acids; (2) chloride and sulphate of magnesium; (3) grease (giving

rise to acids); (4) dissolved carbonic acid and oxygen. To prevent corrosion, therefore, the water must be purified of its corrosive impurities before it is fed into the boiler; or, if the impure water *must* be used, some agent that will neutralize the impurities should be introduced into the water.

When acids are present in the water, they may be neutralized by adding an alkali. For chloride and sulphate of magnesia, add carbonate of soda. The action of grease may be neutralized by carbonate of soda or slaked lime. Dissolved carbonic acid and oxygen require the addition of slaked lime or caustic soda. When the boiler is known to contain corrosive impurities, its interior should be inspected frequently for indications of corrosion.

BLOWING OFF.

93. The way in which a boiler is emptied by **blowing off** is often responsible for the formation of a great deal of scale, and sometimes for cracked sheets and broken staybolts. A boiler should never be emptied by blowing off under a high steam pressure, unless in emergencies. When time is of no object, the boiler should be allowed to cool gradually until under a very low pressure, and then emptied. When the boiler must be cooled and emptied quickly, for washing out or for any other purpose, all but about a gauge of water should be blown off, and the boiler then filled gradually with water. The blow-off cock may then be opened, keeping sufficient water flowing into the boiler to keep the water level about constant. By this means, the body of water in the boiler, and, consequently, the boiler itself, will be cooled gradually, the sediment will not be baked on the heating surfaces, and there will be less tendency for sheets and stays to crack and break. When the pressure is reduced sufficiently, the boiler may be emptied, and it should be allowed to cool before again filling with cold water.

When carbonate of soda or soda ash is used to prevent the formation of scale, frequent blowing out of the water is resorted to, to remove the dissolved scale and neutralized soda ash. This should be done often enough to prevent foaming.

EXCESSIVE PRESSURE.

94. Fortunately, **excessive overpressure** in locomotive boilers is not of frequent occurrence, yet every engineman should understand how to safely relieve the boiler of overpressure, as ignorance on this subject may lead to a disastrous explosion. If the pressure rises above the safe limit, it should be reduced by starting the injectors, closing the dampers, covering the fire with enough fresh coal to deaden it. *Do not open the safety valve however.* The sudden, heavy reduction of pressure caused by quickly opening the throttle or the safety valve produces a violent rush of steam and water against the parts of the boiler adjacent to the valve, and the force of the shock may be sufficient to cause the boiler to give way. Steam valves should never be opened or closed very suddenly at *any* time; it should be done **very gradually** in times of overpressure.

COLLAPSED FLUES.

95. Iron flue plugs, for plugging the ends of collapsed flues, are generally carried on the engine, together with a plugging bar. In the event of a flue collapsing, it will, in all probability, deaden the fire sufficiently for protection, and the flue can then be plugged—first the firebox end and then the front end. To do this, a plug is attached to the end of the plugging bar, with which it is inserted and driven into the end of the flue. In some cases, the flue may be in such a position that it cannot be plugged by means of the plugging bar, in which case it will be necessary to knock out or bank the fire, to cool off the firebox, before the flue can be plugged.

If iron plugs are not at hand, wooden ones may be made and used; the wooden plug will burn off even with the flue, but no farther. Of course, the train must be protected with flags the moment it is brought to a standstill. While driving the plug in the flue, keep out of its range, so that if it should be forced out by the steam pressure no harm will be done.

If the engine is not provided with a plugging bar, the plug may be fastened to a long pole (if available) and then inserted in the flue end, driving it home with an iron bar or a piece of

rail, observing not to hammer so hard as to injure the sheet. The engineer's first efforts, when a flue bursts, should be directed to reducing the pressure, so as to be able to set about the above operations more quickly.

BOILER INSPECTION.

96. Locomotive boilers should be tested and carefully inspected at regular intervals for corrosion, grooving, etc. When a boiler is new or has been repaired, a strength test is applied. This test for strength may be made by the hydrostatic, or cold-water, test; by the warm-water test; or by steam pressure. Sometimes the first two tests and sometimes the first and third are used.

The cold-water test consists in forcing cold water into the boiler by means of a force pump until the required testing pressure is obtained. This method will show up leaks that would not be found if the plates were heated, as the expansion of the plates, due to this heat, would stop the leaks.

The warm-water test consists in filling the boiler entirely full of cold water, and then heating the water until, in trying to expand, it exerts the required pressure. It may be necessary to use a pump in connection with this to get the required pressure.

The steam test consists either of getting up steam to the required pressure in the ordinary way, or else by turning it in from another boiler.

While the boiler is under pressure, the hammer test is sometimes employed to determine the condition of the plates. *Light* blows are struck with a hammer on different parts of a plate and the condition of the plate judged from the sound and resistance.

A careful inspection should also be made for defects and indications of weakness, such as a change of form in the shell.

After the test, the boiler should be emptied and the inside carefully inspected, to detect any defective or broken stayrods, and staybolts should then be tested by means of the hammer test, preferably under air pressure.

BOILER EXPLOSIONS.

97. Cause.—Boiler explosions are always due to the fact that some part of the boiler is, for some reason, too weak to withstand the pressure to which it is subjected. This may be due to one of two causes: Either the boiler is not strong enough to safely carry its proper working pressure, or else the pressure has been allowed to rise above the usual point by the sticking of the safety valves, or some similar cause.

98. Elements of Weakness.—A boiler may be unfit to carry its working pressure for one or more of the following reasons: (1) Defective design; (2) defects in workmanship or material; (3) corrosion and general wear and tear; (4) mismanagement in working.

1. *Defective Design.*—This consists, among other things, in designing boilers in such a manner that access cannot be had to the places most liable to wear and tear. Defective water circulation may also be a result, and this may lead to excessive incrustation and consequent collapse.

2. *Defects of Material and Workmanship.*—The material may be faulty in the first place, the plates containing blisters, laminations, etc., or they may have been burned or injured in flanging, bending, or welding; or they may be scored along the seams by sharp calking tools. The rivets, also, may have been burned or imperfectly upset. The plates may have been injured in patching, or the patches, if in a firebox, may have been burned. Also, the greater expansion and contraction of the new plate forming the patch is injurious. Patching a firebox is an important job.

3. *Corrosion, Pitting, and Grooving.*—The strength of the shell may be much weakened by these causes. In some boiler explosions, the plates have been found wasted to less than a sixteenth of an inch.

Fractures, which ultimately end in explosions, may be produced by letting the cold feedwater come directly in contact with the hot plates. The feed should be introduced into the coolest part of the boiler.

4. *Bad Management.*—The pressure of the steam may be allowed to rise above the normal pressure by neglect or mismanagement. The safety valves may stick fast to their seats. The crown sheet may become overheated to such an extent that the stays pull through and thus cause an explosion; or the explosion may result from putting water on the sheet while red hot. In this latter case, an excessive pressure will be suddenly generated that may force the crown sheet down, or else the sheet may suddenly contract to such an extent as to produce a rupture.

Should the crown sheet become overheated, close the dampers, smother the fire with fine, wet coal, and open the fire-door a little. *Do not start the injector, and do not stop or start the engine or touch the safety valves,* as any such change of conditions might cause a sudden increase of pressure that would force the crown sheet down and cause an explosion. Just smother the fire, and allow the crown sheet to *cool gradually* until it will be safe to begin feeding slowly. If the sheet is found to have become red hot, the engineer should give up his train, as it is impossible to tell just what damage has occurred without making a close and careful examination.

99. A Source of Danger.—A weak boiler may possibly be exploded *by a sudden opening or closing of the throttle valve.* That such an explosion is possible is shown by the following experiment made by the United States inspectors: A cylindrical boiler was tested and withstood a steam pressure of 300 pounds without injury. It was then filled again and the steam pressure was run up gradually, the discharge valve being opened at intervals and the fall in pressure noted. When the valve was suddenly opened at a pressure of 235 pounds, the boiler gave way, the iron being twisted and torn into fragments and thrown in all directions. The reason for this was that the sudden rush of steam from the boiler into the discharge pipe reduced the pressure in the boiler very rapidly; this reduction of pressure caused the sudden formation of a great quantity of steam within the water, and the heavy mass of water, being thrown with great violence towards the opening whence the

steam was being withdrawn, struck the portions of the boiler near that opening and caused the fracture. Explosions from the foregoing cause are probably rare, still it is well to use caution in opening or closing the throttle or safety valves.

The destructive nature of a steam-boiler explosion is due to the enormous amount of energy stored in the steam and heated water. Professor Thurston calculates that 1 cubic foot of water, heated at constant volume until its pressure is 60 to 70 pounds per square inch, has about the same energy as 1 pound of gunpowder, and that the energy stored in a plain cylindrical boiler at 100 pounds pressure is sufficient to project it to a height of over 3½ miles.

100. Violence of Explosion.—If a boiler fractures while undergoing the hydrostatic test, the water escapes through the rent in the plate, and no explosion takes place because the cold water has little or no stored energy. But when a boiler filled with steam and water at high temperature (and pressure) fractures, a violent explosion follows. The steam escaping through the initial fracture diminishes the pressure on the water in the boiler; the water being at a very high temperature, this diminution of pressure leaves it free to generate instantaneously a new and large volume of steam. The sudden overloading of the boiler due to the extra steam thus formed is what really produces the disastrous effects observed in an explosion. Generally speaking, the larger the body of the contained water, the more disastrous is the result. The safety of water-tube boilers is thus accounted for by the fact that they consist of numerous parts or sections, each containing a relatively small body of water. The bursting of one of these sections is unusual, on account of its small diameter, and *should* it occur, no disastrous explosion would be likely to follow, on account of the small quantity of water it contains.

Boiler explosions may be prevented by the use of a properly designed and well-made boiler, placed under careful management. The boiler must be regularly inspected, repaired when necessary, and removed from service before becoming so worn out as to be dangerous.

Steam, Cylinders, and Valve Gears.

(PART 1.)

WORK AND ENERGY.

1. Before taking up the study of locomotive cylinders, valves, and valve gears, it is advisable to make a brief study of work and energy; of heat and temperature; of the effects of heat and the relation between heat and work; also, a study of steam and its properties, and of a simple steam engine. A good knowledge of these subjects will be of great assistance to the student, not only in studying the remainder of this course, but in his every-day work, as he will understand much better the forces under his control, and what takes place within his engine. He will therefore be better prepared to deal with any emergency that may arise.

WORK.

DEFINITIONS.

2. Force.—In the study of work, a clear conception of the difference between *force*, *work*, and *power* should be gained.

The word **force** is given to that agency which produces, destroys, or changes the direction of motion, or tends to do so. It is given to any pressure, tension, push, or pull, whether applied directly to a body, or, like the force of gravity, through an invisible medium.

3. Work.—**Work** consists in producing, destroying, or changing the direction of motion in opposition to a resisting force—that is, in moving a body against a resisting force. When water is raised from a well, or earth from a hole in the

ground, or, in fact, when anything is raised from a lower to a higher level, work is done in overcoming the force of gravity. In bending a board or in driving a nail into it, the positions of some of the molecules of the wood are changed with relation to one another, and the work performed in either case is done in overcoming the resistance that the molecules offer to such change. If a sled is drawn over bare ground, work is done in overcoming the force of friction that acts between the earth and the sled runners to stop the motion of the sled.

If we stop and consider the actions that constitute the work performed by a man, a horse, or a steam engine, we find that **motion** is an essential element. In raising a stone a man does work, since he raises it against the resisting force, gravity; the stone has work done upon it, since it is made to move against the action of the force of gravity. If the man were merely to support the stone in his arms, he would do no work in the sense the term is used in mechanics, because, although he supports the stone, he does not move it against the action of a resisting force.

4. The Elements of Work.—To do work it is necessary to move a body in opposition to a force that tends to prevent that movement. **Resistance** and **space,** therefore, are essential elements of work. A horse in drawing a load does work, the amount of which depends on the resistance offered to the movement of the load and on the distance through which it is drawn. The amount of work done in raising the weight of a pile driver depends on the height to which it is raised, and on the resistance (the force of gravity) against which it is raised. When the expansive force of steam in a steam cylinder forces the piston out, it does work, the amount of which depends on the distance (length of stroke) through which the force acts and on the resistance against which the piston is moved.

Work cannot be done on a body that offers absolutely no resistance to the action of the force; neither can a body do work unless its motion is resisted by an opposing force. On the other hand, whenever a force produces, destroys, or changes motion, it does work.

UNIT OF WORK.

5. Kinds of Work.—There are many kinds of work, such as raising weights, winding up springs, overcoming frictional resistances, etc., and, in order to be able to measure and compare different kinds of work, it is necessary to have a common unit of measurement. Now, work, as has been seen, consists in producing, destroying, or changing motion against a resistance, and, if the same resistance is encountered, the amount of work expended in effecting the motion will be the same, regardless of whether the motion is vertically upwards or in any other direction. This being true, it is simply necessary to combine a unit of resistance and a unit of space to form a unit of work. One unit of resistance is the pound; a unit of space is the foot; therefore, when these units of length and resistance are used, the unit of work is called the *foot-pound.*

6. The Foot-Pound.—A **foot-pound** represents the amount of work necessary to move a body through a distance of 1 foot against a resisting force of 1 pound. For example, if a 1-pound weight is raised vertically upwards 1 foot, 1 foot-pound of work is done; or, if a steady pull of 1 pound is required to move a sled, 1 foot-pound of work will be expended in moving it 1 foot.

7. Amount of Work Performed.—We may determine the amount of work (in foot-pounds) done in any case by means of the following rule:

Rule.—*The amount of work performed is found by multiplying the resistance in pounds by the distance in feet through which the body is moved against the action of the resisting force.*

In the case of a locomotive running at constant speed, the resisting force of the train is equal to the drawbar pull, for if it were greater, it would stop the train, and if it were less, the speed would constantly increase; hence, if a locomotive exerts a drawbar pull of, say, 17,000 pounds in moving a train, it does

$1 \times 17{,}000$, or 17,000 foot-pounds of work for every foot it moves the train; therefore, in traveling 1,000 feet, $1{,}000 \times 17{,}000$ or 17,000,000 foot-pounds of work will be done on the train.

POWER.

8. Definition.—Power is the rate of doing work. In calculating the amount of work done (Art. 7), the resisting force and the distance the body is moved against it are multiplied together, *but the time consumed in doing the work is not taken into consideration.*

For example, the amount of work done in raising 500 pounds of wheat 2 feet is the same whether it is raised in 1 minute or in 5 hours. A small child could raise the wheat, lifting a little at a time, and it would do as much *work* as the man who could raise 100 pounds at a time; but the *power* of the man, that is, the *rate* at which he is capable of doing work, is evidently much greater than that of the child.

9. Rate of Doing Work.—By the term **rate of doing work** is meant the amount of work done in a unit of time.

Rule.—*To determine the rate at which work is done, divide the total amount of work in foot-pounds by the time in minutes required to do the work.*

EXAMPLE.—An engine, while exerting a constant drawbar pull of 10,000 pounds, travels 12,000 feet in 5 minutes. At what rate is it doing work?

SOLUTION.—The total amount of work done in 5 minutes is $10{,}000 \times 12{,}000$, or 120,000,000 foot-pounds. The rate at which the work is done, therefore, is 120,000,000 divided by 5, or 24,000,000 foot-pounds per minute. Ans.

10. Horsepower.—The unit of power commonly used to express the rate of doing work is called a **horsepower.** It represents the ability to do 33,000 foot-pounds of work in 1 minute. Thus, if a hoisting engine could just raise 33,000 pounds 1 foot in 1 minute, it would be called a *1-horsepower*

engine. A 10-horsepower engine can do work at ten times that rate; that is, it can raise 330,000 pounds 1 foot per minute, 33,000 pounds 10 feet per minute, or 3,300 pounds 100 feet per minute. The word "horsepower" is generally abbreviated and written H. P.

Rule.—*To determine the rate,* **in horsepower,** *at which work is done, divide the total quantity of work by 33,000 times the number of minutes required to do the work.*

EXAMPLE.—A locomotive, exerting a constant drawbar pull of 15,000 pounds, moves a train 10,000 feet in 10 minutes. At what rate, in horsepower, is the engine doing work?

SOLUTION.—The total quantity of work done is $15,000 \times 10,000$, or 150,000,000 foot-pounds; the rate, in horsepower, is therefore 150,000,000 divided by $33,000 \times 10$, or 455 H. P., nearly.

ENERGY.

ENERGY DEFINED.

11. Energy is the ability to do work; in other words, it is the ability to produce, destroy, or change motion in opposition to a resisting force.

All men and animals possess this power to a greater or less degree. The falling weight of a pile driver, a rolling stone, a car in motion—in fact, any body of matter in motion—is capable of doing work in being brought to rest, and, therefore, possesses energy.

A body in motion possesses energy *because of its motion, and the greater its velocity, the more energy it possesses.*

KINETIC ENERGY.

12. Energy due to the motion of a body is called **kinetic energy,** meaning *moving* or *actual* energy. The amount of kinetic energy a body possesses depends on its weight and on the velocity with which it is moving.

Rule.—*To find the kinetic energy of a body in foot-pounds, multiply the velocity of the body in feet per second by itself and by the weight of the body in pounds, and divide the product by 64.32.*

EXAMPLE.—Suppose a car weighing 40,000 pounds is moving at the rate of 10 feet per second; what energy, in foot-pounds, does it possess?

SOLUTION.—Since its velocity is 10 feet per second, and its weight 40,000 pounds, the amount of energy it possesses, at that speed, will be $\frac{10 \times 10 \times 40{,}000}{64.32}$, or about 62,189 foot-pounds, and the car could perform 62,189 foot-pounds of work in being brought to rest.

Had the car been moving with a speed of 20 feet per second, it would have possessed $\frac{20 \times 20 \times 40{,}000}{64.32}$, or about 248,756 foot-pounds of energy—four times as much as when traveling at the rate of 10 feet per second.

POTENTIAL ENERGY.

13. A body may have no motion, and therefore will possess no kinetic energy, yet, by virtue of an advantage in position, it may possess energy of another form.

For instance, a pile-driver weight has no energy and can do no work while it is simply resting on the ground, and when held aloft it appears to be just as devoid of energy. That it possesses energy when in the latter position, however, can very readily be proved by allowing it to fall. In fact, there is a great difference between the weight resting on the ground and the weight suspended in the air: in the former position it can do no work; in the latter it can, and its energy, or ability to do work, in the latter case, is due simply to its advantage of position.

It will thus be seen that energy may exist in two widely different forms: (1) it may exist as *actual motion*, as in the case of any mechanical motion, or the invisible motions of the molecules of a body; or, (2) it may exist in a *stored-up* condition, by virtue of the body (as in the case of a raised pile-driver weight), or its molecules (as in the case of a compressed spring), occupying a position or positions of advantage. This stored-up energy is called **potential energy.**

TRANSFORMATION OF ENERGY.

14. Energy in one form may be transformed into energy of another form. The following is a good illustration of transforming, or changing, kinetic energy into potential energy, and then retransforming it into kinetic energy:

Suppose a stone to be thrown straight up in the air. It starts with its greatest velocity (and, therefore, with its greatest amount of kinetic energy), which, as the stone rises, gradually decreases until the stone has attained its greatest height, when the velocity is all spent. For an instant, before starting downwards, the stone is at rest, and therefore for that instant it possesses only potential energy. The kinetic energy with which the stone started was all spent, or used up, in raising the stone to its position of advantage, by virtue of which it possesses its potential energy. In falling, this potential energy is gradually spent in increasing the velocity of the stone and, therefore, its kinetic energy, until, on reaching its starting point, the stone has regained the same amount of velocity and, therefore, of kinetic energy, it had on starting upwards.

At the instant of beginning and ending its flight the stone possesses only kinetic energy; during its flight it possesses both kinetic and potential energy. The potential energy increases and the kinetic energy decreases as the stone rises, while, as it falls, the kinetic energy increases and the potential energy decreases. During every instant of the stone's flight the sum of its kinetic and potential energies is constant, and energy is neither created nor destroyed, but is simply transformed from one form to the other.

There is a certain amount of **energy stored in coal** in the form of potential energy. When the coal is burned, this energy is liberated and is changed into kinetic energy in the form of heat. The kinetic energy of the heat changes water into steam, which thus has a certain amount of potential energy; when this steam is allowed to act on the piston of a steam engine, causing it to move and overcome a resisting force, its potential energy is changed into kinetic energy, and does work.

CONSERVATION OF ENERGY.

15. The principle of **conservation of energy** teaches us that energy, like matter, cannot be destroyed, and that the total quantity in the universe remains constant. If a clock is put in motion, the potential energy of the spring is changed into the kinetic energy of motion, which turns the wheels, thus producing friction. This friction produces heat, which is carried away by the surrounding air; but still the energy is not destroyed—it merely exists in another form.

HEAT: EFFECTS AND MEASUREMENT.

HEAT.

DEFINITION.

16. **Heat** is a form of energy; it is a kind of motion of the molecules composing matter. These molecules are never at rest, but are constantly moving to and fro, bumping and jostling one another in much the same manner as a swarm of bees. It is this movement of the molecules that produces the sensations of warmth and cold. If the motion is rapid, the body feels warm to the touch; if it is slow, the body feels cold.

TEMPERATURE.

17. **Definition.—Temperature** is a term used to indicate how hot or how cold a body is; that is, to indicate the rate of vibration of the molecules of a body. A hot body is said to have a high temperature; a cold body, a low temperature. When a body receives heat from any source its temperature rises; on the other hand, when a body loses heat its temperature falls.

18. **Temperature Not a Quantity.**—The term *temperature* does not mean the same as *quantity of heat*, and the quantity

of heat a body possesses cannot be determined from its temperature. For instance, a cup of water may have a temperature of 212° F., yet it does not possess nearly the quantity of heat that a pail of water at 50° F. does. Again, the cup of water may be at a lower temperature than the water in the pail, in which case it will neither have the temperature nor the quantity of heat of the latter.

"Temperature" may be considered to be a measure of the velocity of the molecules of a body as they move to and fro, while "quantity of heat" may be considered to be the energy of the molecules composing the body.

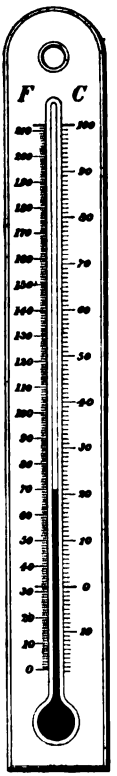

FIG. 1.

19. Measurement of Temperature.—Temperature is measured by means of an instrument called a **thermometer,** one type of which is shown in Fig. 1. It consists of a glass tube, closed at both ends, and having a bulb at the lower end. The bulb and the lower end of the tube are filled with mercury, which, on being heated or cooled, expands or contracts in proportion to the change of temperature. This expansion or contraction causes the top of the mercury column to rise or fall, and since equal changes of temperature make the mercury column rise or fall equal distances, the graduations on the scale are made equal throughout.

20. Combination Thermometer.—In Fig. 1 is shown a combination thermometer, that is, one that has two scales: The scale on the left, marked *F*, in combination with the glass tube forms a *Fahrenheit thermometer* (so named after its inventor), which is the one commonly used; the scale *C* on the right forms, in combination with the glass tube, a *centigrade thermometer.* The centigrade thermometer is used by scientists throughout the world on account of the graduations being better adapted for calculations.

21. Graduating a Thermometer.—The graduations on the scale of a thermometer are obtained as follows: First, the

thermometer is placed in melting ice, and the point to which the mercury column falls is marked and called the *freezing point;* it is next placed in steam that is escaping from an open vessel, and the point to which the mercury rises in the tube is marked and called the *boiling point.* These are two fixed points; that is, the mercury column will always register these same points when the thermometer is placed in broken ice or in steam, under the conditions explained above.

22. Freezing Point and Boiling Point.—The **freezing point** marks the temperature at which, under atmospheric pressure, water freezes and forms ice, or at which ice melts and forms water, since water freezes and ice melts at exactly the same temperature.

The **boiling point** marks the temperature at which water boils and forms steam, when subjected to atmospheric pressure.

Having these two fixed points, the distance between them is divided into equal parts, the number of divisions depending on whether the scale is for a Fahrenheit or a centigrade thermometer.

23. Fahrenheit Thermometer.—The **Fahrenheit thermometer** is made by dividing the distance on the scale between the freezing and boiling points into 180 equal divisions, called *degrees.* The freezing point is marked 32, and the boiling point 212; 32 divisions are marked off from the freezing point downwards, and the lowest one is marked 0. This is called the *zero point* of the scale. The graduations may be extended above the boiling point, or below the zero point, as desired.

Instead of writing the word *degrees* after each reading of temperature, it is customary to represent it by a symbol—a small circle placed above and to the right of the figures. Also, the word *Fahrenheit* is usually represented by the letter F. Thus, 32° F. means the same as though it were written "32 degrees Fahrenheit," and 8° F., the same as "8 degrees Fahrenheit." In this thermometer there are 212 divisions, or degrees, between the zero point and the boiling point.

24. Centigrade Thermometer.—In the **centigrade thermometer,** the freezing point is marked 0, and the boiling point 100, the distance between the two being divided into 100 equal divisions. As in the Fahrenheit scale, the divisions may be carried above the boiling point and below the zero point. The word *centigrade* is usually abbreviated and written C., as, for example, 10° C., 28° C., etc.

25. Thermometer Readings.—Beginning with 0°, the divisions on both the Fahrenheit and centigrade scales are numbered 1, 2, 3, 4, etc., both above and below the zero point. Therefore, in giving the lower readings of a thermometer, it is necessary to state the number of degrees and whether they are above or below zero.

To distinguish temperatures below zero from those above, the sign of subtraction is always placed before the former, Thus, 12° means 12° *above* zero on both scales, while −12° means 12° *below* zero.

26. Absolute Temperature.—The freezing point was chosen as the zero point of the centigrade scale. Fahrenheit placed the zero point of his thermometer 32° below the freezing point, as that was the lowest temperature he could obtain, and he supposed that it was impossible to obtain a lower one. From the results of experiments and from calculations, however, it has been concluded that at 460° F. below zero, or 492° F. below the freezing point, there is absolutely no heat. This is therefore called the *absolute zero*, and all temperatures reckoned from this point are called **absolute temperatures.** Absolute zero has never been reached, the lowest recorded temperature being in the neighborhood of −400° F.

27. Reckoning Absolute Temperature.—Absolute temperature may be reckoned either on the Fahrenheit or on the centigrade scale. Between 0° absolute and 0° F. there are 460 Fahrenheit degrees; between 0° absolute and the freezing point there are 460 + 32, or 492°; while between 0° absolute and the boiling point there are 460 + 212, or 672°. Between 0° absolute and 0° C. there are 273⅓ centigrade degrees.

Absolute Temperature, Fahrenheit.—If the absolute temperature of a body in degrees Fahrenheit is given, its temperature on the ordinary Fahrenheit thermometer can be found by subtracting 460 from the absolute temperature. If the absolute temperature is less than 460, subtract it from 460, and the result will be the temperature *below* zero on the Fahrenheit thermometer.

The absolute temperature of a body in degrees Fahrenheit may be found from its Fahrenheit temperature by adding 460 to it, when the thermometer reading is *above* zero; if the thermometer reading is below zero, subtract the reading from 460. Thus, 150° F. = 150 + 460 = 610° F. absolute; and, —23° F. = 460 — 23 = 437° F. absolute.

Absolute Temperature, Centigrade.—To find the absolute temperature of a body from its centigrade temperature, add the centigrade temperature to 273⅓ when it is above zero, and subtract it from 273⅓ when below zero. Thus, 60° C. = 273⅓ + 60, or 333⅓° C. absolute; —10 C. = 273⅓ — 10, or 263⅓° C. absolute.

To find the centigrade temperature of a body from its absolute temperature, subtract 273⅓ from the absolute temperature. Thus, 300° absolute = 300 — 273⅓, or 26⅔° C.

If the absolute temperature is less than 273⅓, subtract the absolute temperature from 273⅓, and the result will be the centigrade temperature below zero. Thus, 250° absolute = 273⅓ — 250, or 23⅓° C. below zero.

28. Changing From Centigrade to Fahrenheit.—It is frequently necessary to change from one scale to the other. For example, what would 80° C. be on the Fahrenheit scale?

Since the number of degrees between the freezing point and the boiling point on the centigrade scale is 100, and on the Fahrenheit 180, 1° F. will equal $\frac{100}{180}$ C. = $\frac{5}{9}$° C. Likewise, 1° C. will equal $\frac{180}{100}$ F. = $\frac{9}{5}$° F.

Rule.—*Multiply the centigrade temperature by* $\frac{9}{5}$ *and add 32; the result is the Fahrenheit temperature. If, however, the given temperature is below zero and its product by* $\frac{9}{5}$ *is greater than 32,* **subtract** *32; the result is the Fahrenheit temperature* **below** *zero.*

EXAMPLE.—What will be the reading of a Fahrenheit thermometer if a centigrade thermometer indicates a temperature (*a*) of 100° C.? (*b*) of —40° C.?

SOLUTION.—(*a*) Applying the rule, $100 \times \frac{9}{5} = 180$; $180 + 32° = 212°$ F. Ans. (*b*) $40 \times \frac{9}{5} = 72$. Since the given temperature is below zero and its product by $\frac{9}{5}$ is greater than 32, $-40°$ C. $= 40 \times \frac{9}{5} - 32 = 40°$ F. below zero. Ans.

29. Changing From Fahrenheit to Centigrade.—To change Fahrenheit temperatures to their centigrade values.

Rule.—*First of all:* (*a*) *If the given Fahrenheit temperature is 32° or greater, subtract 32 from it;* (*b*) *if between 0° and 32°, subtract it from 32;* (*c*) *if below 0°, add 32 to it. The result, in each case, multiplied by* $\frac{5}{9}$ *will be the centigrade temperature; in the cases of* (*b*) *and* (*c*) *the temperatures will be below zero.*

EXAMPLE.—What will be the reading on a centigrade thermometer if a Fahrenheit thermometer indicates a temperature (*a*) of 60° F.? (*b*) of 20° F.? (*c*) of —20° F.?

SOLUTION.—(*a*) Applying the rule, $60 - 32 = 28$; $28 \times \frac{5}{9} = 15\frac{5}{9}°$ C. Ans. (*b*) $32 - 20 = 12$; $12 \times \frac{5}{9} = 6\frac{2}{3}°$ C. below zero. Ans. (*c*) $20 + 32 = 52$; $52 \times \frac{5}{9} = 28\frac{8}{9}°$ C. below zero. Ans.

EFFECTS OF HEAT.

30. Rise of Temperature.—Suppose a cylinder *A B*, Fig. 2, fitted with a piston *P*, and half filled with water at a temperature of 30° F., is placed on a fire. Heat will be communicated to the water and will increase the velocity of its molecules; that is, their kinetic energy will increase, and if a thermometer is placed in the water, it will indicate a rise of temperature. One effect of heat, therefore, *is to raise the temperature of the body* to which it is applied.

31. Expansion of Body.—After a certain temperature is reached, the molecules of the water not only move faster but they separate farther from one another, and their paths are longer. Since the molecules are farther apart, it follows that the water must occupy more space than formerly, or, in other words, it expands. This expansion will be indicated by the piston *P* rising as the water is heated. Another effect of heat, therefore, is to *expand the body* to which it is applied. Other

familiar examples of the expansion of bodies due to heat are as follows:

The tires on locomotives are bored out smaller than the wheel centers on which they are to fit, and are then expanded by the application of heat until they will go on; on cooling they contract again, and grip the wheel very firmly. Also, the rails of a railway are considerably longer in summer than in winter, due to expansion caused by the increase in temperature.

Generally, the greater part of the heat given to a body is spent in raising its temperature, and but little goes to expand the body.

32. Limit of Temperature.—Suppose the piston, Fig. 2, is now removed from the cylinder, and a thermometer suspended in the water. As heat is applied to the cylinder, the thermometer will show a gradual rise in temperature until 212° F. is reached, after which the temperature will remain constant, no matter how much heat is applied. Before 212° F. is reached, most of the heat was spent in raising the temperature of the water, and but little in increasing the distance between its molecules. Afterwards, however, all the heat is used in overcoming the attraction of the molecules for one another, and in separating them so far that they no longer attract, but actually repel one another. In other words, the heat is used in changing the water into a vapor called *steam*.

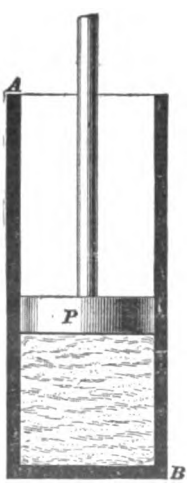

FIG. 2.

33. Changing Solids to Liquids or Liquids to Gases. If a block of ice at a temperature lower than 32° F. is heated, its temperature will rise until 32° F. is reached, when it will remain stationary. The ice will then begin to melt and the heat applied to it, instead of increasing its temperature, is all used in effecting this change of state. Here, then, is another effect of heat. *It will change a solid into a liquid, or a liquid into a gas or vapor.*

SENSIBLE HEAT AND LATENT HEAT.

34. That part of the heat which goes to raise the temperature of a body and, therefore, affects the thermometer is called **sensible heat;** that which is expended on the molecules of a body in changing it from a solid to a liquid, or from a liquid to a vapor, but does not affect its temperature, is called **latent heat.**

MEASUREMENT OF HEAT.

35. Unit of Heat.—Heat cannot be measured directly in pounds or gallons, or by any like units, but must be measured by the effects it produces. The usual method is to measure the change of temperature it produces in a known weight of water.

To measure heat there must be a unit of measurement, and this unit is called a *heat unit*, or *British thermal unit*, this latter being abbreviated into "B. T. U."

A **heat unit** is the quantity of heat required to raise the temperature of 1 pound of water through 1° Fahrenheit. Thus, 1 heat unit will raise the temperature of 1 pound of water 1° F., 2 pounds $\frac{1}{2}$° F., or 10 pounds $\frac{1}{10}$° F.; 10 heat units will raise the temperature of 1 pound of water 10° F., 10 pounds 1° F., or 20 pounds $\frac{1}{2}$° F.; etc.

RELATION BETWEEN HEAT AND WORK.

36. Suppose the piston, Fig. 2, had been allowed to remain in the cylinder while the water was being changed into steam. Steam at 212° F. occupies nearly 1,700 times the space that its water orginally occupied; hence, the piston would be lifted in the cylinder to make room for the steam that was being formed. To raise the piston, however, work must be done. Here, then, is an example of work being done by heat. On the other hand, *work will produce heat.* If two blocks of wood are rubbed briskly together, they will become warm, and may even ignite and burn. The work of friction causes the journals and bearings of fast-running machines to heat. An iron rod may be raised to a considerable heat by pounding it on an anvil. The work done by the driver brake in holding the engine back

on a down grade generates heat that raises the temperature of the tires; and, if the brakes are held on for a sufficient length of time, the heat generated will expand the tires until they become loose on the driving wheels.

Since work may be changed into heat, and heat into work, it seems probable that some fixed ratio exists between the unit of heat and the unit of work. By a careful series of experiments, Dr. Joule, of England, discovered this ratio. He found that 1 unit of heat would do 772 foot-pounds of work; later and more accurate experiments, however, show that 1 heat unit will do 778 foot-pounds of work. The quantity 778 foot-pounds is called the **mechanical equivalent** of 1 heat unit, or **Joule's equivalent.**

Experiment has shown, therefore, that heat can be converted into work, or work into heat; that 778 foot-pounds of work, if converted into heat, will produce 1 unit of heat, or that 1 heat unit will do 778 foot-pounds of work.

STEAM AND THE STEAM ENGINE.

STEAM.

DEFINITION OF STEAM.

37. **Steam** is a colorless water vapor; that is, it is water changed into a gaseous state by the application of heat. The process of changing water into steam by the application of heat, is called **ebullition,** or **boiling.**

THE FORMATION OF STEAM.

38. When water is heated in a vessel, the air contained in the water is first driven off—some escaping from the surface, and some collecting in bubbles on the sides of the vessel. As the temperature of the water nears the boiling point, bubbles of steam form at the heating surface and rise until they meet

the upper and cooler portions of the water, when they collapse with a slight sound. This sound is produced by the steam bubbles condensing, allowing the surrounding water to come violently together. The "singing" of a teakettle just before it begins to boil is caused by the collapsing of a large number of steam bubbles.

As soon as the upper portions of water become sufficiently heated, the bubbles cease to collapse; they grow slightly larger as they rise, and on nearing the surface explode and throw small particles of water up into the steam space. This causes the violent agitation of the surface of the water known as boiling—a sure sign that the water is being converted into steam.

Water, then, may be converted into steam by imparting heat to it. Steam, on the other hand, may be condensed or changed back into water by abstracting heat from it. The latter process is called *condensing*, and the water regained is called *water of condensation.*

SATURATED STEAM.

39. Explanation of Term.—The term "saturated," when applied to steam, does not have the same meaning as when applied to a sponge; that is, it is not intended to convey the idea that the steam is saturated with water. Steam is called **saturated steam** when it is at the greatest density and pressure corresponding to its temperature, under which condition it contains just sufficient heat to maintain it in the state of steam. While in this state, any increase of pressure or loss of heat will cause some of it to condense. This is the condition of steam in a boiler.

Since saturated steam is in that critical state whereby a slight change of pressure or loss of heat will reconvert some of it into water, it has not the permanent condition of a true gas, the physical state of which is unaffected either by a change of pressure or by a loss of heat, or by both. Saturated steam, consequently, does not follow the "laws of gases."

40. Temperature of Saturated Steam.—The temperature of saturated steam depends on the pressure only; that is,

for every pressure it has a definite temperature, and this temperature is always the same as that of the water with which it may be in contact.

On account of this property, the temperature of the steam in a boiler may be determined from the steam-gauge reading, or the pressure of the steam may be determined from its temperature, provided the relations between temperature and pressure are known. These relations have been determined by experiment throughout a wide range of pressures, and are given in the Steam Table on pages 22 and 23.

SUPERHEATED STEAM.

41. Explanation of Term.—Superheated steam is steam whose temperature is higher than that corresponding to its pressure as given in the above mentioned table.

Saturated steam may be superheated in two ways: (1) by separating it from water and imparting additional heat to it; or, (2) by allowing it to expand without doing work, in which case superheated steam of a lower pressure will be formed.

Steam cannot be superheated while in contact with water, owing to the fact that any heat added would go to form more saturated steam, without affecting the temperature of that already formed. Neither can superheated steam exist in the presence of water. If too much water is not present, a sufficient part of the excess heat of the steam will be used to evaporate and superheat it, thereby reducing the excess of heat. If there is too much water for the excess heat to evaporate, the steam will be reduced to the point of saturation, the superheat being entirely used up in converting the water into saturated steam.

42. Use of Superheated Steam.—Saturated steam is not a true gas, although, as has been found by experiment, when superheated about 20° F. it behaves very nearly like a true gas. If saturated steam suffers any loss of heat, some of it will condense. Superheated steam, on the other hand, must lose all of its excess heat before condensation commences.

It is not practicable to use steam that has been superheated more than a few degrees, because if superheated to any great extent it vigorously attacks and corrodes the surface of the metal with which it comes in contact, both in the superheater and in the engine.

WET AND DRY STEAM.

43. Explanation of Terms.—Steam, unless superheated, always contains more or less moisture in the form of minute particles or spray mixed with it. It is the amount of moisture which steam contains that determines whether it is to be called *wet* or *dry*. Strictly speaking, only superheated steam is dry, since, in practice, saturated steam always contains some moisture; yet the term "dry" is not applied to the former, but is intended to indicate the condition of saturated steam.

Wet steam is steam that contains considerable moisture mixed with it in the form of minute spray.

Dry steam, in the usual meaning of the term, is steam that contains but very little moisture in suspension. In practice, steam containing less than 3 per cent. of moisture is considered as dry; steam containing more than 3 per cent. is considered as wet steam. Superheated steam contains no moisture whatever.

44. Respective Properties.—Dry saturated steam and superheated steam are colorless, while wet steam, owing to the amount of water spray it contains, appears white. The condition of the steam in a boiler, therefore, can be judged to some extent by the appearance of a jet of steam issuing from a small orifice situated some distance above the water in the boiler.

Superheated steam will be transparent for a couple of inches from the orifice, after which it will gradually change to a bluish, and then to a grayish-white color, depending on its distance from the orifice.

Dry steam has a very faint bluish color at the orifice, which gradually changes to a grayish-white as its distance from the orifice increases.

Wet steam has a dense white appearance from the moment it leaves the orifice, and its appearance does not change much thereafter.

WIREDRAWN STEAM.

45. When steam has its pressure reduced in passing through a contraction in a valve, steam port, or steam passage, it is said to be **wiredrawn**, or *throttled.* Partly closing a steam valve or the throttle of an engine, therefore, wiredraws the steam passing through it, and the more the valve or throttle is closed, the more the steam is wiredrawn.

The wiredrawing of steam tends to superheat it; therefore, if the steam supplied to an engine is wet, it will often be found advisable to wiredraw it by partly closing the throttle.

PROPERTIES OF SATURATED STEAM.

46. Saturated steam possesses a number of *properties* that change as the pressure of the steam is changed. These properties are as follows:

1. *The temperature of the steam.*

2. *The heat of the liquid.* By this term is meant the number of heat units required to raise 1 pound of water at 32° F. to the temperature of the steam.

3. *The latent heat of vaporization*, or, as it is usually called, *latent heat.* Latent heat was defined in Art. **34.** By "latent heat of vaporization" is meant the number of heat units required to change 1 pound of water at the boiling temperature into steam at the same temperature.

4. *The total heat of vaporization*, or, simply, *total heat.* By "total heat" is meant the number of heat units required to raise the temperature of 1 pound of water at 32° F. to the boiling point, and to convert it into steam of the temperature and pressure in question. The total heat is equal to the sum of the heat of the liquid and the latent heat.

5. *The specific volume of the steam.* This is the space, in cubic feet, that 1 pound of steam at the given pressure occupies.

6. *The density of the steam.* This is the weight of 1 cubic foot of steam at the given pressure.

47. Effect of Pressure.—All of the foregoing properties are different for different pressures. For instance, if water boils under atmospheric pressure, its temperature and the temperature of the steam generated is 212° F.; the heat of the liquid is 180.531 heat units; the latent heat, 966.069 heat units; the total heat, 1,146.6 heat units. A pound of steam at this pressure occupies 26.37 cubic feet of space, and a cubic foot of the steam therefore weighs $\frac{1}{26.37}$, or .038, pound, nearly.

When the pressure is 70 pounds per square inch above vacuum (70 — 14.7, or 55.3 pounds gauge), the temperature is 302.774° F.; the heat of the liquid is 272.657 heat units; the latent heat is 901.629 heat units; and the total heat is 1,174.286 heat units. A pound of steam at this pressure occupies 6.076 cubic feet, and a cubic foot of steam therefore weighs $\frac{1}{6.076}$, or .164584, pound.

The properties of saturated steam have been determined by direct experiment for all ordinary steam pressures, and are given in the table on pages 22 and 23.

EXPLANATION OF THE STEAM TABLE.

48. *Column 1.*—Column 1 gives absolute pressures (see Art. **10**, *Locomotive Boilers*, Part 2) from 1 to 300 pounds. These pressures being reckoned from the point of vacuum are consequently 14.7 pounds greater than gauge pressure; hence, in using the Steam Table, care must be taken not to use a gauge pressure without first adding 14.7 pounds to it.

When the gauge registers 0 pound pressure, the corresponding absolute pressure is 14.7 pounds. Therefore, all pressures in column 1, below 14.7 are less than 0 gauge pressure. For example, 14 pounds absolute is about .7 pound below atmospheric pressure and represents nearly 1½ inches of vacuum; 6 pounds absolute represents about 18 inches of vacuum, while 1 pound absolute represents about 28 inches of vacuum. In other words, 1 pound absolute is 1 pound *above vacuum*, and nearly 14 pounds below 0 gauge pressure (see Art. **12**,

TABLE OF THE PROPERTIES OF SATURATED STEAM.

Pressure Above Vacuum in Pounds per Square Inch.	Temperature, Fahrenheit Degrees.	Quantities of Heat in British Thermal Units.			Weight of a Cubic Foot of Steam in Pounds.	Volume.	
		Required to Raise Temperature of the Water From 32° to the Given Temperature.	Total Latent Heat at the Given Pressure.	Total Heat Above 32°.		Of a Pound of Steam in Cubic Feet.	Ratio of Volume of Steam to Volume of Equal Weight of Distilled Water at Temperature of Maximum Density.
1	2	3	4	5	6	7	8
1	102.018	70.040	1,043.015	1,113.055	.003027	330.400	20,623.0
2	126.302	94.368	1,026.094	1,120.462	.005818	171.900	10,730.0
3	141.654	109.764	1,015.380	1,125.144	.008522	117.300	7,325.0
4	153.122	121.271	1,007.370	1,128.641	.011172	89.510	5,588.0
5	162.370	130.563	1,000.899	1,131.462	.013781	72.560	4,530.0
6	170.173	138.401	995.441	1,133.842	.016357	61.140	3,816.0
7	176.945	145.213	990.695	1,135.908	.018908	52.890	3,302.0
8	182.952	151.255	986.485	1,137.740	.021436	46.650	2,912.0
9	188.357	156.699	982.690	1,139.389	.023944	41.770	2,607.0
10	193.284	161.660	979.232	1,140.892	.026437	37.830	2,361.0
11	197.814	166.225	976.050	1,142.275	.028911	34.590	2,159.0
12	202.012	170.457	973.098	1,143.555	.031376	31.870	1,990.0
13	205.929	174.402	970.346	1,144.748	.033828	29.560	1,845.0
14	209.604	178.112	967.757	1,145.869	.036265	27.580	1,721.0
14.7	212.000	180.531	966.069	1,146.600	.037928	26.370	1,646.0
15	213.067	181.608	965.318	1,146.926	.038688	25.850	1,614.0
16	216.347	184.919	963.007	1,147.926	.041109	24.330	1,519.0
17	219.452	188.056	960.818	1,148.874	.043519	22.980	1,434.0
18	222.424	191.058	958.721	1,149.779	.045920	21.780	1,359.0
19	225.255	193.918	956.725	1,150.643	.048312	20.700	1,292.0
20	227.964	196.655	954.814	1,151.469	.050696	19.730	1,231.0
22	233.069	201.817	951.209	1,153.026	.055446	18.040	1,126.0
24	237.803	206.610	947.861	1,154.471	.060171	16.620	1,038.0
26	242.225	211.089	944.730	1,155.819	.064870	15.420	962.3
28	246.376	215.293	941.791	1,157.084	.069545	14.380	897.6
30	250.293	219.261	939.019	1,158.280	.074201	13.480	841.3
32	254.002	223.021	936.389	1,159.410	.078839	12.680	791.8
34	257.523	226.594	933.891	1,160.485	.083461	11.980	748.0
36	260.883	230.001	931.508	1,161.509	.088067	11.360	708.8
38	264.093	233.261	929.227	1,162.488	.092657	10.790	673.7
40	267.168	236.386	927.040	1,163.426	.097231	10.280	642.0
42	270.122	239.389	924.940	1,164.329	.101794	9.826	613.3
44	272.965	242.275	922.919	1,165.194	.106345	9.403	587.0
46	275.704	245.061	920.968	1,166.029	.110884	9.018	563.0
48	278.348	247.752	919.084	1,166.836	.115411	8.665	540.9

1	2	3	4	5	6	7	8
50	280.904	250.355	917.260	1,167.615	.119927	8.338	520.5
52	283.381	252.875	915.494	1,168.369	.124433	8.037	501.7
54	285.781	255.321	913.781	1,169.102	.128928	7.756	484.2
56	288.111	257.695	912.118	1,169.813	.133414	7.496	467.9
58	290.374	260.002	910.501	1,170.503	.137892	7.252	452.7
60	292.575	262.248	908.928	1,171.176	.142362	7.024	438.5
62	294.717	264.433	907.396	1,171.829	.146824	6.811	425.2
64	296.805	266.566	905.900	1,172.466	.151277	6.610	412.6
66	298.842	268.644	904.443	1,173.087	.155721	6.422	400.8
68	300.831	270.674	903.020	1,173.694	.160157	6.244	389.8
70	302.774	272.657	901.629	1,174.286	.164584	6.076	379.3
72	304.669	274.597	900.269	1,174.866	.169003	5.917	369.4
74	306.526	276.493	898.938	1,175.431	.173417	5.767	360.0
76	308.344	278.350	897.635	1,175.985	.177825	5.624	351.1
78	310.123	280.170	896.359	1,176.529	.182229	5.488	342.6
80	311.866	281.952	895.108	1,177.060	.186627	5.358	334.5
82	313.576	283.701	893.879	1,177.580	.191017	5.235	326.8
84	315.250	285.414	892.677	1,178.091	.195401	5.118	319.5
86	316.893	287.096	891.496	1,178.592	.199781	5.006	312.5
88	318.510	288.750	890.335	1,179.085	.204155	4.898	305.8
90	320.094	290.373	889.196	1,179.569	.208525	4.796	299.4
92	321.653	291.970	888.075	1,180.045	.212892	4.697	293.2
94	323.183	293.539	886.972	1,180.511	.217253	4.603	287.3
96	324.688	295.083	885.887	1,180.970	.221604	4.513	281.7
98	326.169	296.601	884.821	1,181.422	.225950	4.426	276.3
100	327.625	298.093	883.773	1,181.866	.230293	4.342	271.1
105	331.169	301.731	881.214	1,182.945	.241139	4.147	258.9
110	334.582	305.242	878.744	1,183.986	.251947	3.969	247.8
115	337.874	308.621	876.371	1,184.992	.262732	3.806	237.6
120	341.058	311.885	874.076	1,185.961	.273500	3.656	228.3
125	344.136	315.051	871.848	1,186.899	.284243	3.518	219.6
130	347.121	318.121	869.688	1,187.809	.294961	3.390	211.6
135	350.015	321.105	867.590	1,188.695	.305659	3.272	204.2
140	352.827	324.003	865.552	1,189.555	.316338	3.161	197.3
145	355.562	326.823	863.567	1,190.390	.326998	3.058	190.9
150	358.223	329.566	861.634	1,191.200	.337643	2.962	184.9
160	363.346	334.850	857.912	1,192.762	.358886	2.786	173.9
170	368.226	339.892	854.359	1,194.251	.380071	2.631	164.3
180	372.886	344.708	850.963	1,195.671	.401201	2.493	155.6
190	377.352	349.329	847.703	1,197.032	.422280	2.368	147.8
200	381.636	353.766	844.573	1,198.339	.443310	2.256	140.8
210	385.759	358.041	841.556	1,199.597	.464295	2.154	134.5
220	389.736	362.168	838.642	1,200.810	.485237	2.061	128.7
230	393.575	366.152	835.828	1,201.980	.506139	1.976	123.3
240	397.285	370.008	833.103	1,203.111	.527003	1.898	118.5
250	400.883	373.750	830.459	1,204.209	.547831	1.825	114.0
260	404.370	377.377	827.896	1,205.273	.568626	1.759	109.8
270	407.755	380.905	825.401	1,206.306	.589390	1.697	105.9
280	411.048	384.337	822.973	1,207.310	.610124	1.639	102.3
290	414.250	387.677	820.609	1,208.286	.630829	1.585	99.0
300	417.371	390.933	818.305	1,209.238	.651506	1.535	95.8

Locomotive Boilers, Part 2). Pressures above 14.7 pounds, on the other hand, are above atmospheric pressure, and consequently are registered on the gauge. For example, a correct gauge, subjected to 20 pounds absolute pressure, will register 5.3 pounds; under 30 pounds absolute, it will register 15.3 pounds, and so on for the other pressures.

Column 2.—Column 2 gives the temperatures at which water will boil—and, therefore, the temperature of the steam generated—when subjected to the corresponding pressure in column 1. By comparing columns 1 and 2 it will be seen that, as the pressure is increased from 1 to 300 pounds absolute, the boiling point increases from 102° F. to 417° F.

Column 3.—Column 3 gives the "heat of the liquid" under the different pressures. For instance, 180.531 heat units are necessary to raise the temperature of 1 pound of water at 32° F. to the boiling point (212° F.) under an absolute pressure of 14.7 pounds, and 250.355 heat units to raise it to the boiling point (280.904°) under 50 pounds absolute pressure.

It will be noticed that the values in column 3 may be obtained approximately, by subtracting 32 from the corresponding temperature in column 2. If it required exactly 1 heat unit to raise the temperature of 1 pound of water 1° F. at all temperatures, it would, of course, take exactly 212 — 32, or 180 heat units to raise 1 pound of water from 32° F. to 212° F. Experiment, however, shows that above 62° F. an amount slightly greater than 1 heat unit is necessary, as will be seen by comparing columns 2 and 3.

Column 4.—Column 4 gives the latent heat of the steam. By comparing columns 1 and 4 it will be observed that the latent heat decreases slightly as the pressure increases.

Column 5.—Column 5 gives the total heat of vaporization. It will be seen that the values in this column may be obtained by adding together the corresponding values in columns 3 and 4.

Column 6.—Column 6 gives the density or weight of a cubic foot of steam, in pounds, under the different pressures. As will be noticed, the weight increases with the pressure. The reason for this is that a pound of steam is forced to occupy less and

less space as the pressure is increased (see column 7) and thus the amount, and therefore weight, of steam in each cubic foot of space increases with the pressure.

Column 7.—Column 7 gives the space, in cubic feet, occupied by 1 pound of steam under the different pressures. This decreases greatly with the pressure, decreasing from 330.4 cubic feet at 1 pound absolute to 1.535 cubic feet at 300 pounds absolute. It will be noticed that the corresponding values of columns 6 and 7 multiplied together always produce 1. For example, in columns 6 and 7, opposite to 46 of column 1, we find the values .110884 and 9.018, which two multiplied together produce 1, very nearly.

Column 8.—Column 8 gives the ratio of the volume of 1 pound of steam at the given pressure to the volume of 1 pound of water at 39.1° F., at which temperature water is at its greatest density. The values in column 8 may be obtained by dividing 62.425—the weight of a cubic foot of water at 39.1° F.—by the corresponding numbers in column 6.

49. In using the Steam Table it must be remembered: *first*, that the pressures in column 1 are **absolute** pressures, and that consequently 14.7 pounds must be added to gauge pressure before it can be used with the table; and *second*, that the heat of the liquid (column 3), the latent heat (column 4), and the total heat (column 5) are calculated from 32° F., *and not from 0° F.*

EXAMPLES ON THE USE OF THE STEAM TABLE.

EXAMPLE 1.—Give the values of the different properties of saturated steam at 145.3 pounds gauge pressure.

SOLUTION.—A gauge pressure of 145.3 pounds corresponds to an absolute pressure of 160 pounds; therefore, from the Steam Table we find that at 160 pounds absolute the temperature of the steam is 363.346° F.; the heat of the liquid, 334.850 heat units; the latent heat, 857.912 heat units; and the total heat, 1,192.762 heat units. Ans.

EXAMPLE 2.—Calculate the heat required to change 5 pounds of water at 32° F. into steam at 92 pounds pressure above vacuum.

SOLUTION.—From column 5, the total heat of 1 pound of steam at 92 pounds pressure, absolute, is 1,180.045 heat units; therefore, the total heat of 5 pounds will be $1{,}180.045 \times 5$, or 5,900.225 heat units. Ans.

EXAMPLE 3.—How many heat units are required to raise 8½ pounds of water from 32° F. to 250° F.?

SOLUTION.—The "heat of the liquid" of 1 pound at 250.293° F. is 219.261 heat units (see columns 2 and 3). Now, since 1 heat unit will raise the temperature of 1 pound of water 1°, .293 heat unit must have been necessary to raise the water from 250° F. to 250.293° F. To find the heat of the liquid at 250° F., therefore, subtract .293 from the 219.261 heat units. $219.261 - .293 = 218.968$ heat units for 1 pound; $8\frac{1}{2} \times 218.968 = 1{,}861.228$ heat units for 8½ pounds. Ans.

EXAMPLE 4.—How many foot-pounds of work will it require to change 60 pounds of boiling water, at 80 pounds absolute pressure, into steam of the same pressure?

SOLUTION.—Looking in column 4, the latent heat of vaporization is 895.108; that is, it takes 895.108 heat units to change 1 pound of water at 80 pounds pressure into steam of the same pressure. Therefore, it takes $895.108 \times 60 = 53{,}706.48$ heat units to perform the same operation on 60 pounds of water. Now, since 1 heat unit equals 778 foot-pounds of work, (Art. **36**), $53{,}706.48 \times 778 = 41{,}783{,}641.44$ foot-pounds will be required. Ans.

EXAMPLE 5.—Find the volume occupied by 14 pounds of steam at 30 pounds gauge pressure.

SOLUTION.— 30 pounds gauge pressure is $30 + 14.7 = 44.7$, say 45, pounds absolute pressure. The volume of a pound of steam at 44 pounds pressure is 9.403 cubic feet; that of a pound of steam at 46 pounds pressure is 9.018 cubic feet. $9.403 - 9.018 = .385$ cubic foot, the difference in volume for a difference in pressure of 2 pounds. $\frac{.385}{2} = .1925$ cubic foot, the difference in volume for a difference of 1 pound. By subtracting this from the volume of 1 pound of steam at 44 pounds pressure, we have the volume at 45 pounds. Therefore, $9.403 - .1925 = 9.2105$ cubic feet is the volume of 1 pound of steam at 45 pounds pressure. The .1925 is subtracted from 9.403, since the volume is less for a pressure of 45 pounds than for 44 pounds. 14 pounds, therefore, will occupy $14 \times 9.2105 = 128.947$ cubic feet. Ans.

EXAMPLE 6.—Find the weight of 40 cubic feet of steam at a temperature of 255° F.

SOLUTION.—The weight of 1 cubic foot of steam at 254.002° is, from the table, .078839 pound. Neglecting the .002°, the weight of 40 cubic feet is therefore $40 \times .078839 = 3.15356$ pounds. Ans.

EXAMPLE 7.—How many pounds of steam at 64 pounds pressure absolute are required to raise the temperature of 300 pounds of water from 40° F. to 130° F., the water and steam being mixed together?

SOLUTION.—The number of heat units necessary to raise 1 pound from 40° to 130° F. is 130 — 40, or 90 heat units. (Actually a little more would be required, but the above is near enough for all practical purposes.) Now, to raise the temperature of 300 pounds of water from 40° to 130°, the steam must supply 90×300, or 27,000 heat units. It does this by being condensed and then having its water of condensation reduced to 130° F. 1 pound of steam at 64 pounds pressure gives up, in condensing to 1 pound of water, its latent heat of vaporization, or 905.9 heat units. In addition to this, its water of condensation gives up 166.805 heat units in being reduced to 130° F. This is found as follows: The water of condensation has the same temperature as the steam, 296.805° F. For every degree that its temperature is reduced, each pound gives up practically 1 heat unit. In falling from 296.805° to 130°, each pound gives up $296.805 - 130 = 166.805$ heat units. Each pound of steam, therefore, gives up a total of $905.9 + 166.805 = 1{,}072.705$ heat units; hence, it will require $\frac{27{,}000}{1{,}072.705} = 25.17$ pounds of steam to raise the 300 pounds of water from 40° to 130° F.

THE STEAM ENGINE.

WORK DONE BY STEAM.

50. Strictly speaking, steam does not *perform work*. It simply acts as an agent by means of which the potential energy of the fuel is converted into kinetic energy and made to do work. The ability to do work that steam possesses is therefore due entirely to its heat; in other words, it is the *heat* that does the work and not the *steam*. However, as it is customary to speak of the "work done by the steam," "the work done by the steam in expanding," etc., these expressions will be used instead of the longer one, "the work done by the heat contained in the steam."

The usual method of obtaining work from steam is to generate steam at from 75 to 200 pounds pressure by confining it in a closed boiler. This steam is then admitted first to one end of a cylinder fitted with a piston, and then to the other. The pressure of the steam is thus applied alternately on opposite sides of the piston, with the result that it is made to move to and fro within the cylinder.

THE STEAM CYLINDER.

51. Description.—The working of a steam cylinder can best be explained by referring to Fig. 3, in which *C* is the cylinder, shown in section; *P*, the piston, which makes a steam-tight joint with the walls of the cylinder; *R*, the piston rod; *a* and *b*, two steam pipes, which connect the ends *A* and *B*

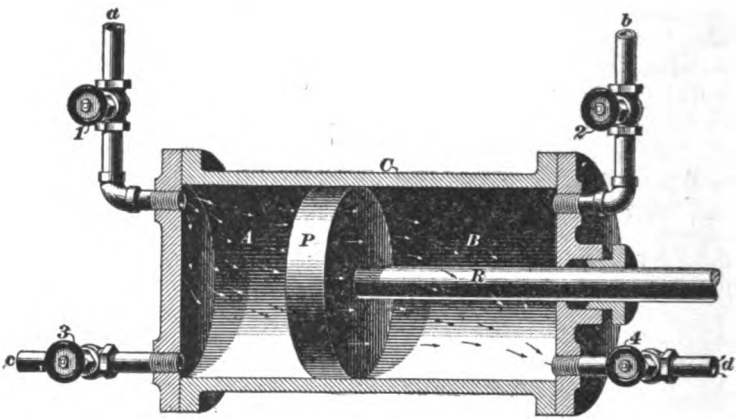

FIG. 3.

of the cylinder with the boiler; and *c* and *d*, two short pipes, which connect the ends *A* and *B* of the cylinder with the atmosphere. The passages in the pipes *a*, *b*, *c*, and *d* are controlled by the valves *1*, *2*, *3*, and *4*.

52. Generating Power.—Now let us see under what conditions the piston will move and develop power. It is evident that the valves *1* and *2* should not be open at the same time, since in that case both sides of the piston will be acted on by steam at boiler pressure. Suppose that valve *1* is opened, and valves *2*, *3*, and *4* remain closed; under these conditions, steam will enter the left end *A* of the cylinder and force the piston to the right until the air that is entrapped in the end *B* is compressed sufficiently to stop the piston. The piston, therefore, cannot complete its stroke until the air under compression in the end *B* is allowed to escape by opening the valve *4*.

To make the piston take a stroke to the right, therefore, it is necessary to close valves *2* and *3*, and open valves *1* and *4*.

Likewise, to make it take a stroke to the left it is necessary to close valves *1* and *4* and open valves *2* and *3*. In either case, while steam is being admitted to the cylinder on one side of the piston, it must be exhausted from it on the other side. The entering steam exerts a greater pressure on the piston than does the steam being exhausted; consequently, the piston always moves towards that end of the cylinder that is open to the atmosphere through the exhaust passage.

STEAM CHEST AND SLIDE VALVE.

53. Description of the Steam Chest and Ports.—In order that the piston may be made to move regularly back and forth in the cylinder, some means must be provided whereby the steam can be admitted to, and exhausted from, the cylinder regularly and at the proper moment. A simple device for accomplishing this is illustrated in Fig. 4.

In (*a*) is shown a sectional view of a steam cylinder *C*, steam chest *X*, and slide valve *v*, together with the piston *P* and piston rod *R*. *S* is the steam-supply pipe, through which steam passes from the boiler to the steam chest. The slide valve *v* is in the steam chest, and serves the same purpose as the valves *1*, *2*, *3*, and *4* of Fig. 3; that is, it controls the passages *a*, *b*, and *d*. This valve may be considered as a cast-iron box with its cover removed, turned "upside down" in the steam chest so that the cavity *c* in the valve is towards the valve seat *s s*.

The ports *a* and *b* in the valve seat lead from the steam chest to the respective ends of the steam cylinder, and are called the **steam ports,** while port *d*, between ports *a* and *b*, leads to the atmosphere and is called the **exhaust port.** These ports serve the same purpose as the steam pipes *a* and *b*, and the exhaust pipes *c* and *d*, of Fig. 3.

54. Description of the Slide Valve.—Another view of slide valve *v*, which is of the ordinary **D** type, is given in (*b*). The valve is removed from the steam chest and turned over so as to show the cavity *c* and the face of the valve. (*c*) is a view

of the valve seat *s s* as seen from above. It will be noticed that the ports in the valve seat are long and narrow. Their length is made slightly less than the width of the cavity *c* in the slide valve, to prevent steam from leaking underneath the edges of the face of the valve and its seat. The ends *1* and *2* of the valve are of just the same width as the steam ports

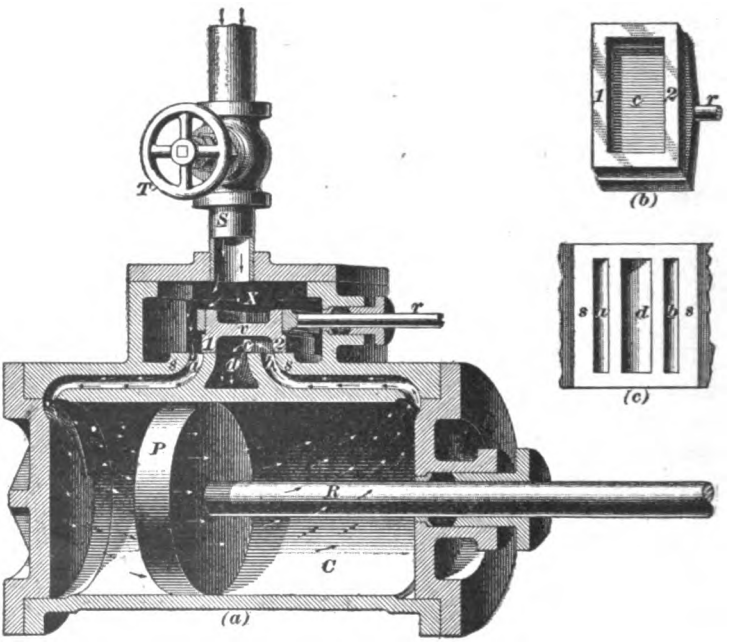

FIG. 4.

a and *b* in the valve seat, and the valve is made of such a length that its ends *1* and *2* just cover the ports *a* and *b* when the valve is at mid-stroke.

55. Operation of Steam Cylinder.—If the valve is moved either to the left or to the right of its mid-position, it opens one of the steam ports, so that steam can pass through it to that end of the steam cylinder, while, at the same time, it connects the other end of the cylinder with the atmosphere through the other steam port, the cavity *c* of the slide valve,

Botler.

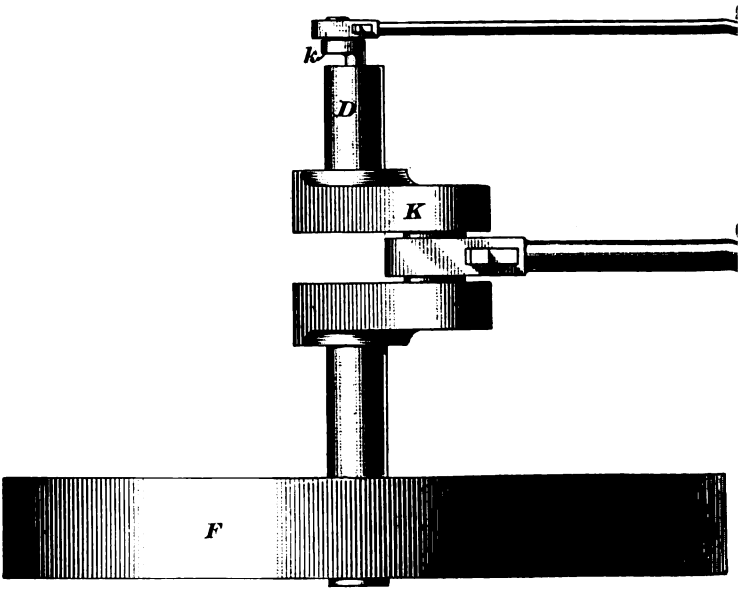

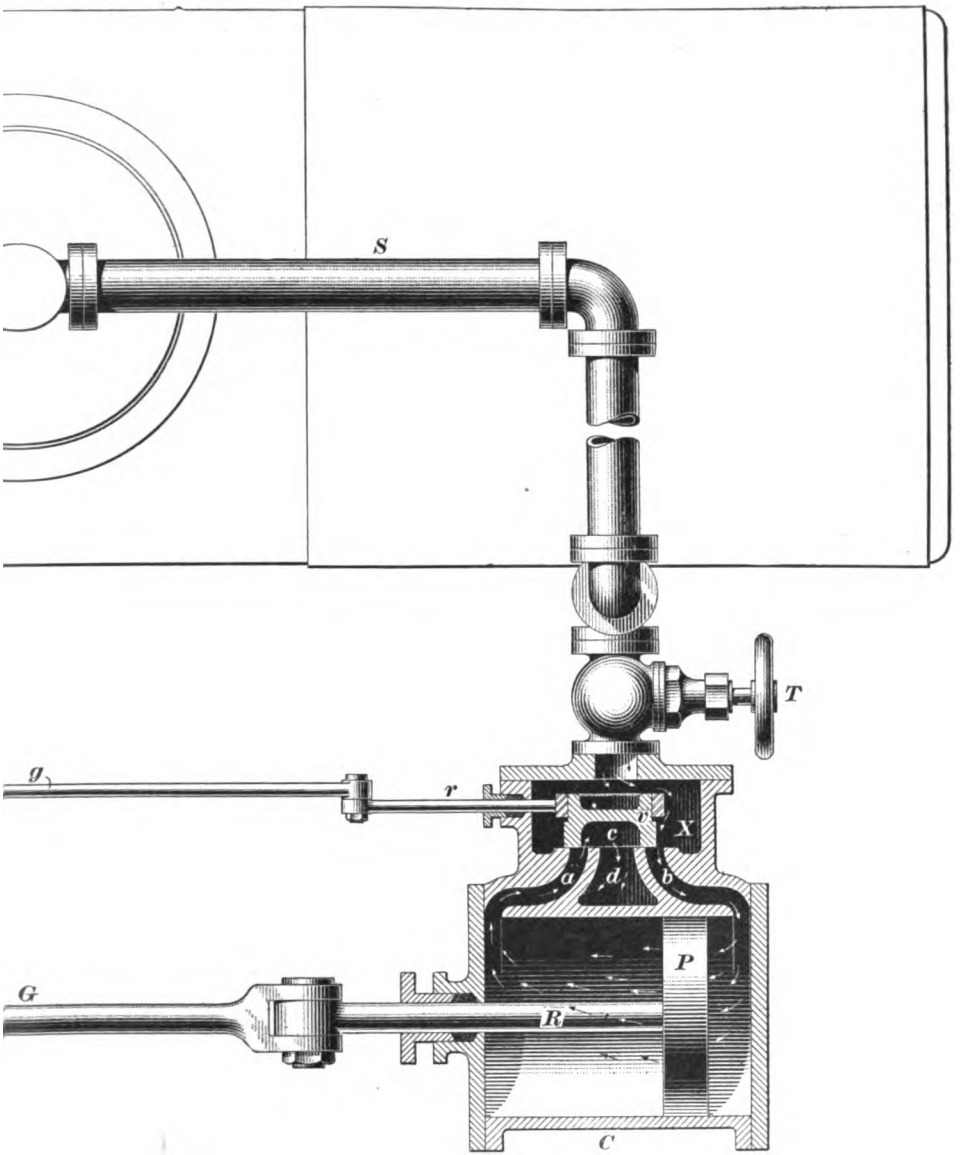

FIG. 5.

and the exhaust port *d*. The flow of steam both to and from the cylinder is shown by the arrows in the figure.

If, as the piston reaches the end of its stroke to the right, the slide valve is moved to the left until it connects the steam port *a* with the exhaust port *d*, and uncovers the steam port *b*, the steam in the left end of the cylinder will flow back through port *a*, and pass to the atmosphere through cavity *c* of the slide valve and the exhaust port *d*, while steam will pass through the steam port *b* to the right end of the cylinder and force the piston to the left.

We have already seen that, when the slide valve is moved so as to admit steam to one end of the cylinder, it exhausts it from the other end, and that the steam entering the cylinder always forces the piston to the other end of the cylinder. Therefore, all that is necessary to keep the piston constantly moving back and forth, is to move the slide valve back and forth in such a way that it will open and close the steam ports *a* and *b* alternately, and just as the piston reaches the end of its stroke.

THE COMPLETE ENGINE.

56. Definition.—The **steam engine** is a machine for transforming the potential energy of fuel into mechanical work. It consists of (1) a furnace in which the potential energy of the coal is converted into heat energy; (2) a boiler containing water that absorbs this heat energy and stores it in steam that is generated, so that it can be readily used; and (3) some means of changing the heat energy of the steam into mechanical work, as, for instance, by means of a steam cylinder and piston. However, while the boiler, furnace, and steam cylinder, strictly speaking, are each parts of the steam engine, it is customary to call the furnace and boiler the "boiler," and the steam cylinder with its accompanying parts and devices, the "engine."

57. Elementary Engine.—A simple form of engine, together with the boiler and the steam-supply pipe *S*, is shown in Fig. 5. The cylinder *C*, steam chest *X*, and slide valve *v*

are shown in section; the steam and exhaust ports, slide-valve cavity, and other parts being lettered as in Fig. 4. The various mechanical details are purposely omitted, to make the illustration as simple as possible, that it may be more readily understood.

It is desirable to convert or change the to-and-fro motion of the piston of an engine into rotary motion, as in turning the flywheel of a stationary engine, or the drivers of a locomotive. This is accomplished by means of a connecting-rod *G* and crank *K*, Fig. 5. It is essential, also, that the engine be self-acting when once started, and this is accomplished by giving the slide valve the proper to-and-fro motion by means of the valve rod *g* and the crank *k* on the shaft. Motion is communicated by the piston *P*, through the piston rod *R* and connecting-rod *G*, to the crank *K*, and by this means the shaft *D*, and, consequently, the crank *k* are rotated. The motion of the crank *k* is communicated through the valve rod *g* and valve stem *r* to the slide valve, which is made to slide to and fro on its seat. We shall, for convenience, allude to *K* and *k* as the piston crank and valve crank, respectively.

The valve crank *k* is secured to the shaft *D* at right angles to the position of the crank *K*; consequently, the slide valve is at mid-stroke* when the piston is at either end of its stroke.

To show the relative positions of the slide valve and piston for different points of both an outward and a return stroke of the piston, the following series of diagrams are given.

DIAGRAMS OF A SLIDE-VALVE ENGINE.

58. Explanation of Diagrams.—In the five diagrams of a slide-valve engine, Fig. 6, *O* corresponds to the shaft *D*, Fig. 5; *O a*, to the piston crank *K*; and *O b*, to the valve crank *k*. The larger circle of dotted lines represents the path of the

* The irregular displacement of the valve and piston, due to the angularity of the valve rod and connecting-rod, will not be considered in this Section.

center of the "piston crankpin" as it revolves around the shaft *O*, and the smaller circle represents the path of the center of the

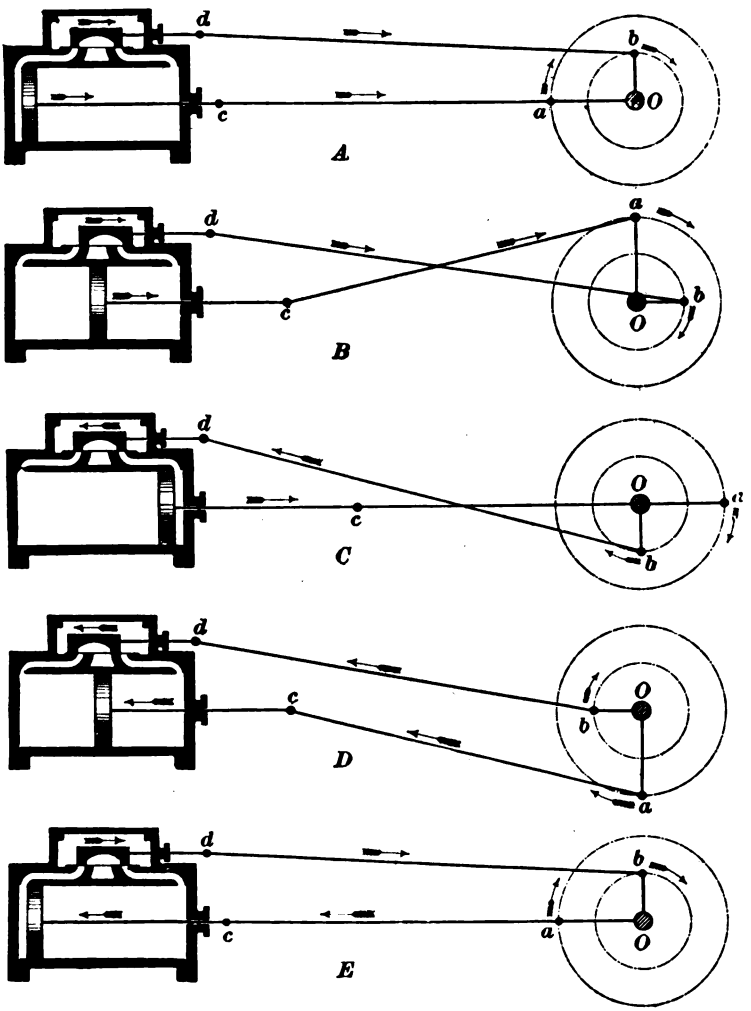

FIG. 6.

"valve crankpin." *a c* corresponds to the connecting-rod *G*, and *b d* to the valve rod *g*. The sizes of some of the parts have purposely been exaggerated to make the diagrams clearer.

Diagram A.—The diagram *A* represents the piston at the end of its stroke, and just about to move to the right, as shown by the arrow. Also, the valve is about to move in the direction of *its* arrow, and, therefore, steam is about to be admitted to the left-hand steam port, while the right-hand port is about to be connected with the exhaust. The piston is at the beginning of its outward stroke, while the valve is at mid-stroke. It will be noticed that with the piston in this position, the connecting-rod *a c* and piston crank *O a* form a straight line, while the valve crank, which is at right angles to it, is vertical. All the parts are about to move in the direction indicated by their arrows.

Diagram B.—Diagram *B* shows the position of the parts when the crank *O a* has moved through the first quarter of its revolution, and is at right angles to its position in diagram *A*. While the crank is moving through this quarter circle, the piston moves from the beginning to the middle of its stroke, and the slide valve moves from the middle to the end of its outward stroke, and is on the point of reversing its motion. The left steam port is now wide open for the admission of steam, and the right steam port is wide open for exhaust.

Diagram C.—Diagram *C* shows the position of the parts when the crank has moved through the second quarter of its circle. The piston has moved from mid-stroke to the end of its outward stroke, and is on the point of reversing the direction of its motion. The slide valve has reversed the direction of its motion, and traveled from the beginning to the middle of its return stroke; consequently, it has just closed both steam ports and is on the point of opening the right steam port for the admission of steam, and the left port for the flow of exhaust steam to the atmosphere.

Diagram D.—As the crank travels its third quarter, to the position shown in diagram *D*, the piston has its direction of motion reversed and travels the first half of its return stroke. The slide valve, during the same time, has traveled from the middle to the end of its return stroke. In this position both steam ports are wide open—the right-hand one to the steam chest, and the left-hand one to the exhaust.

Diagram E.—While the crank travels the last quarter of its stroke, to the position shown in diagram *E*, which is the same as that shown in diagram *A*, the piston travels the last half of its return stroke, and is on the point of reversing and beginning another outward stroke. The valve, meanwhile, has traveled from the beginning to the middle of another outward stroke and again covers both steam ports. Since the valve is moving outwards, it is on the point of uncovering the left steam port for the admission of steam, and connecting the right steam port with the exhaust.

59. Comparison of Diagrams.—Comparing the directions of the arrows, which indicate the direction of the motion of the different parts in the five diagrams, it will be seen that the slide valve is always half a stroke ahead of the piston. During the first half of the outward stroke of the piston, the valve and piston move in the same direction, but during the last half the valve moves to the left, while the piston continues to the right. The left steam port, therefore, is open for the admission of steam, and the right port to the exhaust, for the full length of the outward stroke. Likewise, during the first half of the return stroke, the valve and the piston travel in the same direction, whereas, during the second half, they travel in opposite directions. During the full length of the return stroke, steam is admitted to the right of the piston, while the space to the left is open to the exhaust.

Another thing to notice is that when the crank Oa and the connecting-rod ac are in the same straight line, as in diagrams *A*, *C*, and *E*, the piston is at the end of its stroke. When in this position, the engine is said to be **on the dead center.**

In practice, it is not customary to admit steam to the cylinder for the full length of the stroke. Steam is admitted during a part of the stroke only; the supply is then cut off and the steam in the cylinder allowed to expand during the remainder of the stroke. This subject, however, will be more fully discussed later.

LOCOMOTIVES.

THE PREVAILING TYPES.

60. Locomotives may be divided into two main groups, the first one comprising those used in passenger and freight

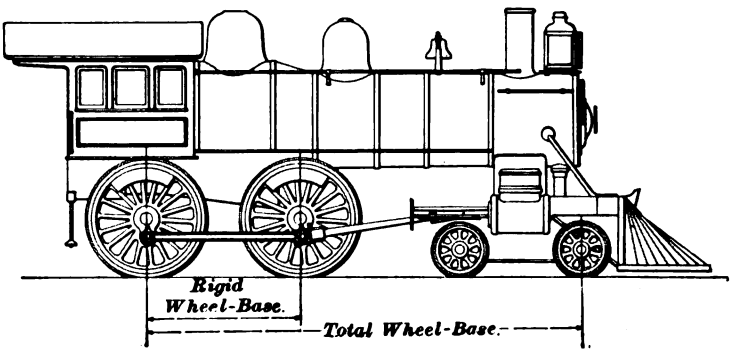

FIG. 7.

service on our railroads, and the second, those used in special service, such as in switching, mountain operations, and in mining, logging, plantation, and other industries.

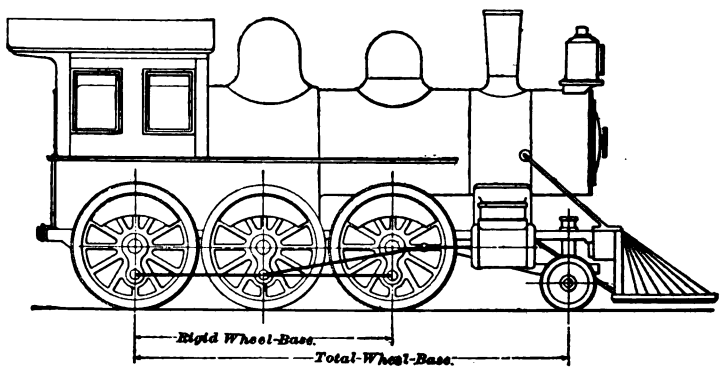

FIG. 8.

Locomotives of the first group include various types, as follows:

1. *Eight-Wheeled, or American.*—This engine, shown in Fig. 7, has four drivers and a four-wheeled truck.

2. *Mogul.*—This engine, Fig. 8, has six drivers and a two-wheeled truck, known as a *pony*, or *Bissel*, truck.

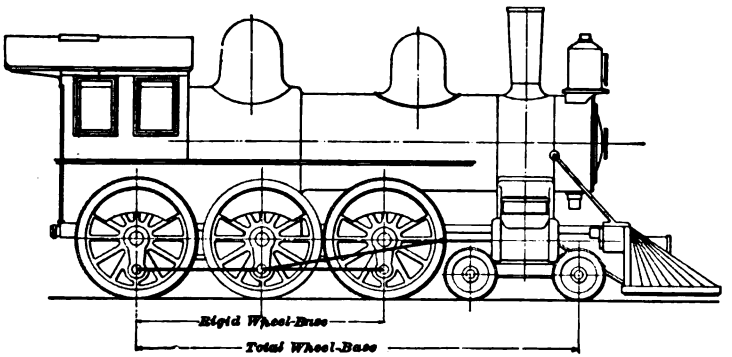

FIG. 9.

3. *Ten-Wheeled.*—This type, illustrated in Fig. 9, has six drivers and a four-wheeled truck.

4. *Consolidation.*—This type, Fig. 10, has eight drivers and a two-wheeled truck.

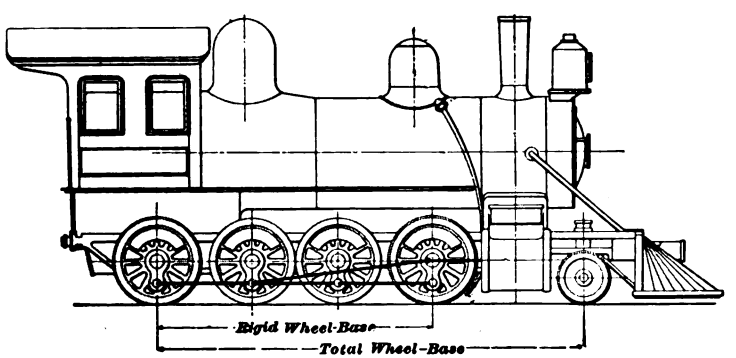

FIG. 10.

5. *Twelve-Wheeled.*—This engine, Fig. 11, has eight drivers and a four-wheeled truck.

6. *Decapod.*—This type of engine, Fig. 12, has ten drivers and a two-wheeled truck.

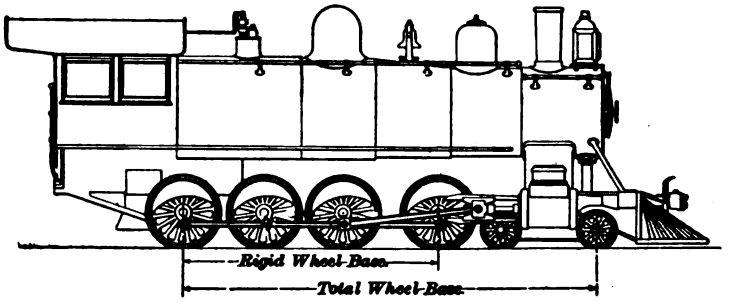

FIG. 11.

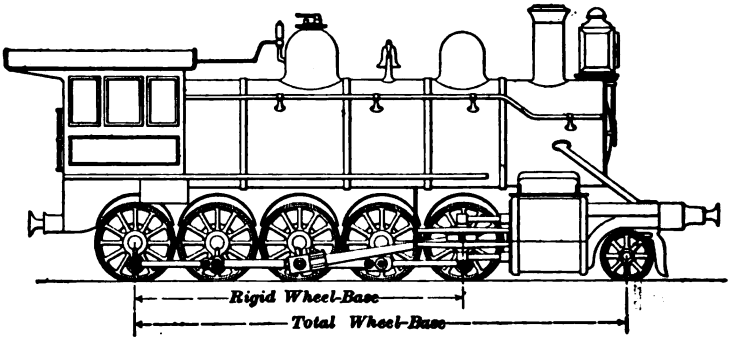

FIG. 12.

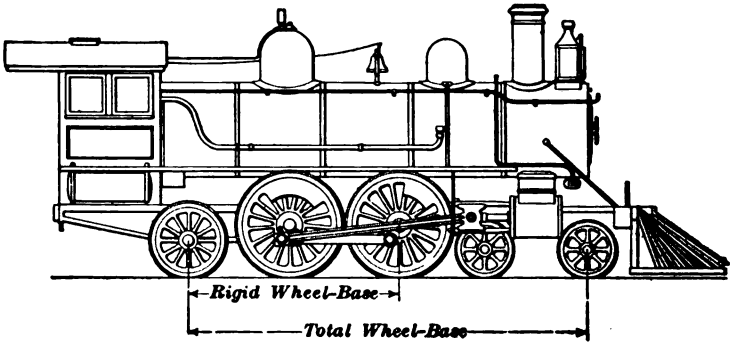

FIG. 13.

7. *Columbia.*—An engine of this type is shown in Fig. 14. It has four drivers, a two-wheeled truck at the leading

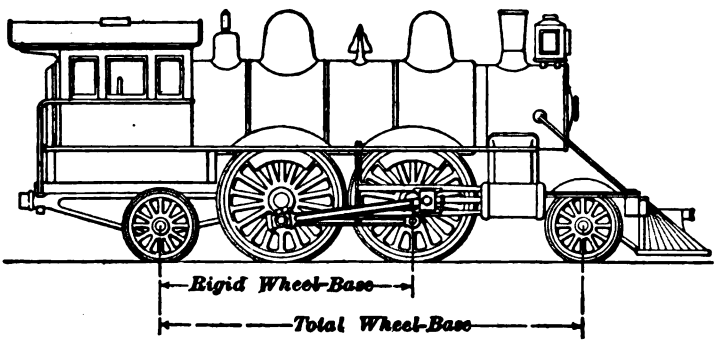

FIG. 14.

end, and a pair of carrying wheels under the firebox. This may be classed as a special type and is only occasionally met with.

8. *Atlantic.*—This engine, illustrated in Fig. 13, is a special type, that is fast coming into use for high-speed service. It has four drivers, a four-wheeled truck, and a pair of carrying wheels under the firebox.

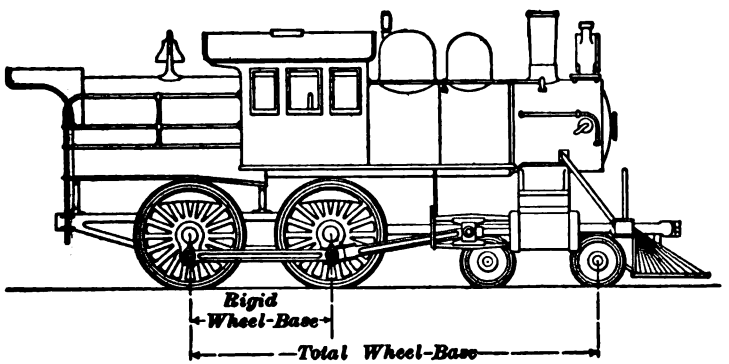

FIG. 15.

9. *Wide-Firebox Locomotive.*—This is a type distinguished, not, as in the preceding cases, by the number and arrangement

of its wheels, but by its having a very wide firebox, which, spreading out over the frames, necessitates the cab being moved forwards in front of the firebox. It is illustrated in Fig. 15. This design may be met with in engines having either four, six, or more drivers.

PRELIMINARY DETAILS.

NUMBER OF DRIVERS.

61. By increasing the number of driving wheels, larger and heavier engines can be used and a greater per cent. of the weight of the engine can be carried on the drivers, thereby greatly increasing the traction of the driving wheels on the rails without, at the same time, imposing excessive pressure on the driving axles or on the rails at one place.

One disadvantage of increasing the number of drivers is that it increases the *rigid wheel base*, but the effect of this is partially overcome by making the tires on certain drivers wider and without flanges. The advantages of using more than four drivers are so much greater than the disadvantages that the practice of coupling three or more pairs of drivers together is increasing.

WHEEL BASE.

62. The **rigid wheel base** of a locomotive is, in the majority of cases, the distance between the centers of the first and last driving axles, Figs. 7–12. In Figs. 13 and 14 the rigid wheel base includes the rear, or trailing, pair of wheels; these wheels as a rule, however, are given more play than the drivers.

The **total wheel base** is the horizontal distance between the centers of the axles of the first truck wheel and the last driving wheel—or, in Figs. 13 and 14, the pair of trailing wheels.

In speaking of *drivers*, the pair towards the front end are called the first pair; immediately back of these are the second pair; etc.

GAUGE OF TRACK.

63. The standard broad gauge of the United States is 4 feet 8½ inches; narrow gauges vary from 21 inches to 3 feet.

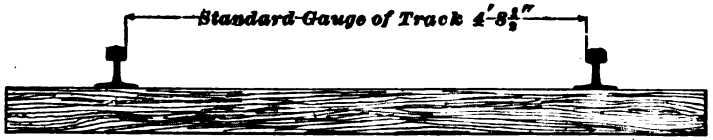

FIG. 16.

The **gauge** of a track is the distance between the two rails, measured on the inside, as shown in Fig. 16.

DETAILS OF CONSTRUCTION.

FRAMES.

64. General Description.—Side views of four styles of **frames** in common use are shown in Fig. 17. Frames (*a*), (*b*), and (*c*) are each made in two parts, the cylinders being fastened to the front part or rail of the frame, called the *splice*. The back part, called the *main frame*, contains the *pedestals* or jaws for the driving boxes.

(*a*) represents the frame of an eight-wheeled passenger engine, (*b*) that of a ten-wheeled engine, or with cylinder connection like that of (*c*), a mogul, (*c*) that of a consolidation engine, (*d*) is for the same class of engine as (*c*), it differing from the latter in the mode of construction, the lower frame braces being bolted to the frame legs instead of being solid therewith.

The jaws, or pedestals, hold the journal-boxes in place, and consist of two frame legs each. These are welded to the top rail and lower frame braces of the main frame, thus binding them together.

Different styles of **pedestals** are shown in Figs. 18, 19, and 20. *A* is the top rail of main frame; *B*, *B* are the frame legs that form the jaws; and *C*, in the case of Fig. 18, is a *pedestal cap*,

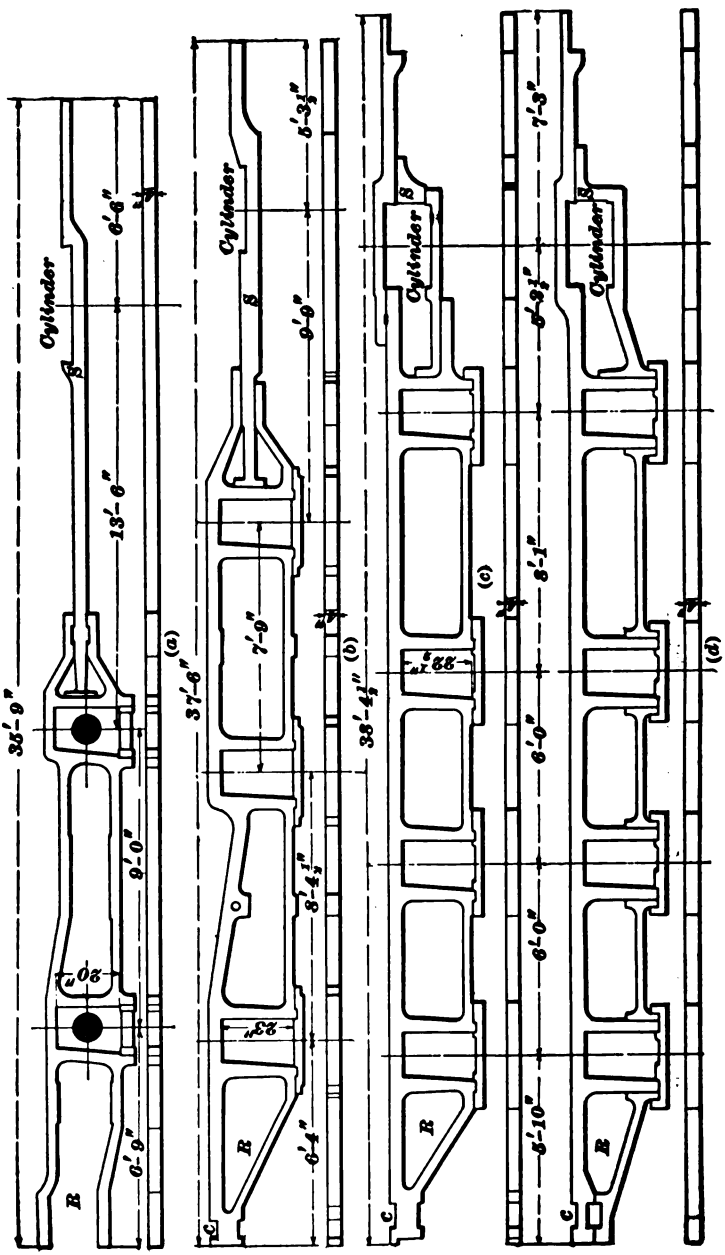
Cylinder
S
R
C
(a)
(b)
(c)
(d)
35'-9"
6'-6"
13'-6"
9'-0"
6'-9"
20"
37'-6"
7'-9"
9'-0"
5'-3"
8'-4½"
6'-4"
23"
38'-4½"
6'-9½"
8'-1"
6'-0"
6'-10"
7'-8"

Fig. 17.

or binder, which is bolted to the lower frame brace *D*. The pedestal cap binds the frame legs together, and prevents them from spreading, while at the same time it permits the wheels and boxes to be readily dropped out or put in when necessary.

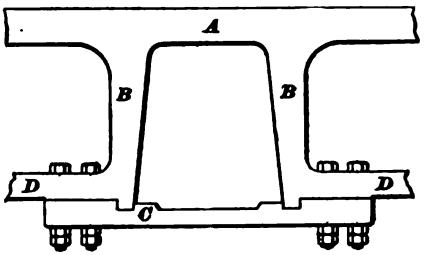

FIG. 18.

In Figs. 19 and 20 the frame legs are bound together at the bottom by the jaw bolt *E*, which passes through the *frame thimble C* inserted between the legs of the jaw. The jaw bolts are generally 2 to 2½ inches in diameter. The frame thimble is made of cast iron, and is provided at one end with slots *F*, *F* through which the wedge bolts *G* pass.

The thimble arrangement is generally used for larger sized engines, since in engines having cylinders less than 16 inches in

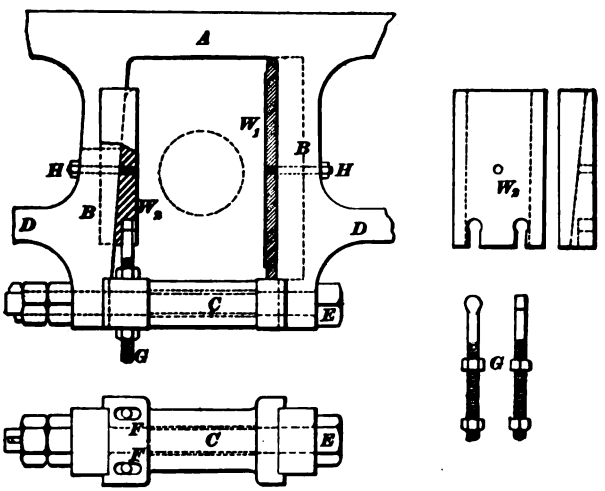

FIG. 19.

diameter the jaw bolts interfere with the wedge bolts. Pedestal caps, therefore, are preferable for small engines. Two different forms of jaw are used. That shown in Figs. 19 and 20 has

one straight and one tapered leg. The straight leg is usually placed nearest the cylinders, as it is then easier to maintain the same distance between the center of the cylinder and of the driving axles.

In Fig. 18 both legs of the jaw are tapered. This form has been extensively used, but of late years that shown in Figs. 19 and 20 has had the preference. In both forms, the taper of the legs is usually $1\frac{1}{8}$ inches in 12 inches.

65. Wedges and Shoes.—The **wedge** W_2 and **shoe** W_1 serve two purposes: *first*, they protect the legs from wear; and, *second*, they provide a means of taking up any play between the journal-box and wedges that may result from wear.

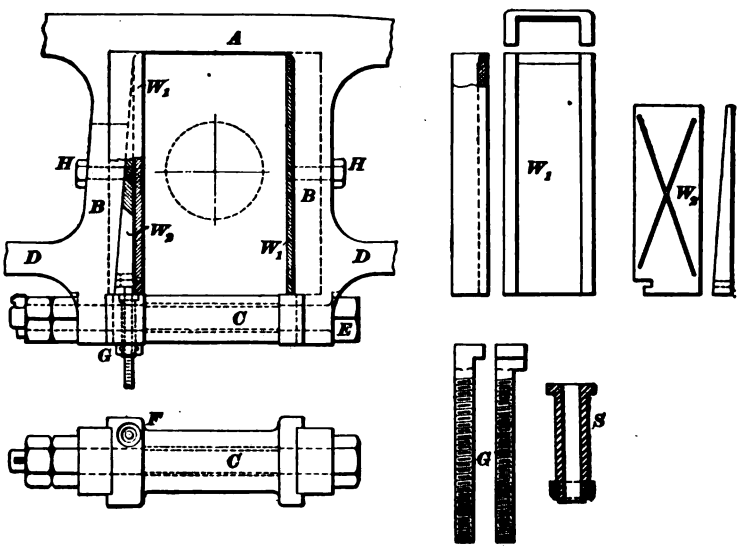

FIG. 20.

When the engine is in motion, the journal-boxes play up and down in their pedestal jaws, and gradually wear away the wedge and shoe. If this wear is not taken up, it soon results in a bad pound, which occurs every time the engine passes a dead center.

66. Taking Up the Play.—The play is taken up by moving the wedge W_2 upwards by means of the wedge bolts *G*,

since raising the wedge brings its face and that of the shoe nearer together. The bolts *H*, *H* hold the wedge and shoe in position against the legs of the jaw; and, since the wedge W_2 must be raised, a slot is cut in the tapered leg of the jaw, which permits the bolt, when loosened, to be moved up or down with the wedge while the latter is being adjusted. To raise the wedge, therefore, the bolt *H* must be slacked out to permit it to move up with the wedge, and the lower nut on the wedge bolt *G* must be unscrewed sufficiently, after which the wedge may be raised by turning the upper nut of the wedge bolt in a direction that will raise it. When the wedge is properly adjusted, the lower wedge-bolt nut and the bolt *H* should be tightened. Very few new engines have bolts *H*.

The head of the wedge bolt *G* fits into the slot at the bottom of the wedge W_2. The wedge, therefore, may be lowered by loosening the bolt *H* and unscrewing the upper, and screwing up the lower, wedge-bolt nut.

67. Live and Dead Wedges.—The wedge W_2 is sometimes called the **live wedge,** and the shoe W_1 the **dead wedge,** the former having the same taper as the pedestal leg, so that the faces of the shoe and wedge are parallel to each other and at right angles or "square" with the edge of the top rail *A*.

In some cases, the jaws are fitted with one live and one dead wedge, as in Fig. 19; in others, with one live and two dead wedges, as in Fig. 20—the latter construction being used for high-speed passenger engines—while with pedestals like that of Fig. 18, two live wedges are used.

ATTACHING BOILER TO FRAMES.

68. The front ends of the frame splices are held together by means of the bumper beam, which is a wooden beam usually strengthened by an iron girt, and is bolted to the splices. The latter are also rigidly fastened to the cylinders of the engine, the splices usually being supplied with lugs to which the cylinders are secured by means of wedges and bolts. Those portions of the splices that extend beyond the cylinders, and are secured to the bumper timber, are fastened to the

smokebox by means of two diagonal iron braces called *arch braces*, and are also sometimes stayed together by a transverse brace of iron or steel. Connection is made between the barrel of the boiler and the frames by means of braces, and between the firebox and frame by *expansion clamps*. When heated, the boiler expands and lengthens from $\frac{1}{4}$ to $\frac{5}{16}$ inch more than the frame. The expansion clamps, therefore, must be so constructed that while they secure the firebox to the frame they will allow it to move relatively to the latter as the boiler expands, thus avoiding the strains to which both the firebox and frame would otherwise be subjected. The back ends of the frames are held together by means of the deck casting or foot-plate. The boiler is also connected to the guide yoke, which is bolted to the frames. The upper part of the frame is held together by one or more transverse braces. That part of the frame under the foot-plate is usually fastened to the back boilerhead by means of diagonal braces called expansion braces.

SPRING ARRANGEMENT.

69. General Description.—As already stated, the frame forms a carriage for, and therefore carries the weight of, the other parts of the locomotive. Fig. 21 shows how this weight is transferred to the journals of the driving axles on an eight-wheeled engine. In the figure, the axles are supposed to be cut off just back of the nearest drivers, which are removed to give a better view of the arrangement of the parts. The arrangement of the gear on the other side of the engine is, of course, similar to that shown in the figure.

The weight of the frame and its load rests on the *journals* of the axles, which are just inside the driving wheels. These journals turn in journal brasses, or bearings, which are held in position by the jaws and wedges, as shown in the figure. In the figure, also, A represents the off-side drivers; C and C', the expansion clamps that connect the firebox and frame together, the bolt holes for a, a being elongated; G, the *spring saddles*, which rest on the top of the driving boxes; H, the *spring hangers*, the hanger to the left being attached to the

frame at *b* by means of a pin. The hanger to the right passes through the upper frame brace and a helical spring *s*. The short hangers connect the ends of the equalizing lever *R* to the *driving springs* as shown. The fulcrum *r* of the equalizing lever is securely bolted to the frame. *S*, *S* are spring bands, which hold the leaves of the driving springs in place. An inspection of the figure will show that the weight sustained by the frame is transferred to the springs, and thence through the spring saddle and journal-box to the journals of the driving axles.

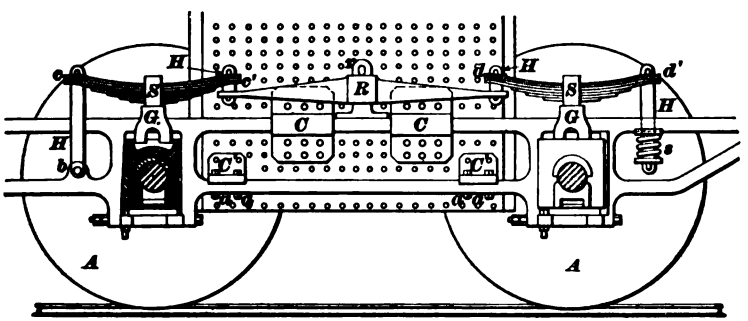

FIG. 21.

The duty of the **springs** is to absorb or take up the shock occasioned every time the drivers pass over a bad rail joint, or a high or low spot in the track. By "giving" somewhat, the springs transform what otherwise would be a sudden blow into a gradually increasing pressure that is not nearly so destructive to either track or locomotive.

70. Duty of Equalizing Lever.—The duty of the **equalizing lever** *R* is to distribute and maintain the weight equally on all the driving wheels. If no such device were used, and if the frames were supported directly on the driving boxes, every time a driver went over a high spot it would tend to lift and carry the load of the other drivers on that side; also, every time it dropped into a low spot it would tend to throw its share of the load on the other drivers. This not only would make the engine ride hard, roll, and pitch more than usual, but it would subject the whole engine to such stresses as to necessitate more frequent repairs and renewals.

71. Mode of Operation of Equalizing Gear.—The manner in which the equalizing gear maintains the load on the drivers equal is as follows: When the driver *A* rolls on to a high spot in the track, its axle and, therefore, the saddle *G* are raised. This tends to move the spring upwards, but as the end *c* cannot move up—being attached to the frame at *b* by the hanger *H*—only the end *c'* moves upwards. This movement causes the equalizing bar to rotate on the fulcrum *r*, the end *c'* moving upwards, while the other end, which is attached to the second driving spring at *d*, is moved downwards, carrying that end of the second spring with it. Thus, since the end *d'* of the spring is prevented from moving upwards, a downward pressure is transferred through the saddle *G* to the axle of the second driver, and both springs are made to bear the shock instead of all being borne by one.

DRIVING WHEELS.

72. Axles.—The **driving axles** are made of hammered iron or steel. In Fig. 22 are shown four different styles used in locomotive practice. The part *A* is called the *wheel fit*,

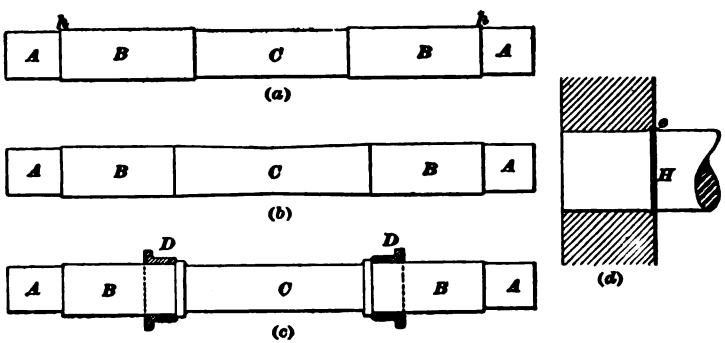

FIG. 22.

and is usually turned $\frac{1}{8}$ inch less in diameter than the journal *B* of the axle; this gives sufficient shoulder for all practical purposes. If the difference between the diameter of the journal and wheel fit is greater than $\frac{1}{8}$ inch, the axle will be greatly weakened, and will be liable to break off at the hub of

the wheel; sharp corners at *h*, *h* will lead to breakage, and should therefore be avoided. The axle may be strengthened by filleting the shoulder. The junction on the axle shown in (*d*) is the best of the four. Here the diameters of the journal and wheel fit are equal, a collar *e* being formed on the axle when it is turned up in the lathe. The collar is from $\frac{1}{8}$ inch to $\frac{3}{16}$ inch wide, and $\frac{1}{8}$ inch larger in diameter than the journal. It will be noticed that it is filleted on both sides, so as to avoid sharp corners. When the collar is used, the hub of the wheel is counterbored to receive it. The central part *C* of all the axles is smooth-forged, and is not intended to be turned up.

Axle (*a*) is commonly used as a main driving axle.

Axle (*b*) is generally used for coupled driving axles, and, as shown, the central part *C* is gradually reduced in diameter to the middle.

Axle (*c*) is also a driving axle with cast-iron collars *D*, *D* that are either shrunk on or are held in position by two setscrews.

73. Wheel Centers.—Examples of driving wheels are shown in Figs. 23–26. They consist of the **wheel center** *A* on which is shrunk a *tire B*, Fig. 23. In this country the driving-wheel centers have hitherto been almost universally made of cast iron, but now steel castings are becoming more general. Sometimes the spokes *S* are cast solid, but usually they and the rim *D* are cast hollow, in the case of cast-iron centers. The hub *H*, the crank *E*, and the counterbalance *C* complete the driver.

The **counterbalance** is either cast in segments and bolted between the spokes, as in Fig. 24, or it is cast together with the wheel, either hollow as in Fig. 23, or solid as in Figs. 25 and 26. When cast hollow, lead is afterwards run in through the core holes.

The tires are shrunk on their centers. The wheel centers are turned as shown in section *b c*, Fig. 24, and the tire is bored somewhat smaller in diameter than that of the wheel center. The tire is then heated by means of a number of gas flames arranged in a circle, until it is sufficiently expanded to slip over

the wheel center. After having put the tire in place it is cooled, thus contracting it and causing it to bind on the center.

Eight-Wheeled Engines.—The wheel shown in Fig. 23 is the one most commonly used for eight-wheeled passenger locomotives. In this wheel the rim, spokes, and counterbalance are cast hollow. The drawing on the left of the figure represents the halves of two different wheels, the left-hand half representing in part elevation and part section the half of a main driver, while the right-hand half is a similar representation of half of a rear driver, the difference between the two

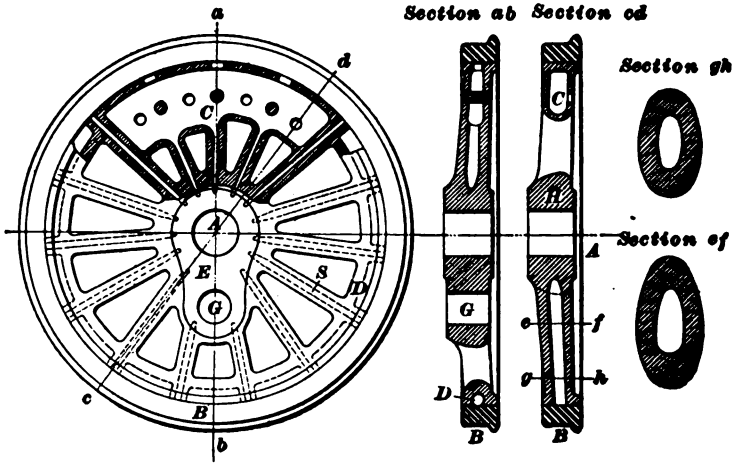

FIG. 23.

being in the dimensions of the counterbalance. Immediately to the right of this drawing is a section of the main driver, taken on the line *a b*, while to the right of that is a section of the back driver, taken on the line *c d*. The spokes are of an oval shape and are cast hollow, as shown by the sectional views, taken on the lines *b c* and *g h*. These forms are the most economical for resisting the stresses and saving material.

In Fig. 24 is illustrated the wheel center of a main driver for a high-speed passenger engine. In this wheel the spokes are cast solid, but the rim is hollow, except the upper portion *a b a*. The cored part *o* of the rim does not extend to the outside (see section *g h*), and the only openings in it are the core holes *a*.

The hub H of the wheel center is also cored, leaving openings p on the inner surface. Solid blocks of iron, which form the

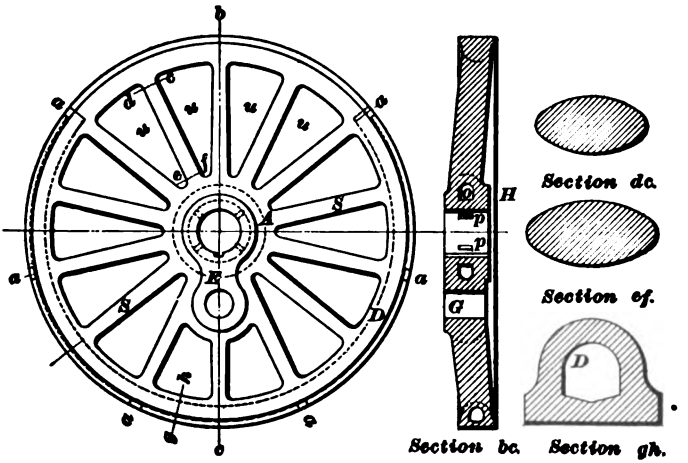

FIG. 24.

counterweights, are placed between the spokes at u, and bolted or riveted in place.

Fig. 25 shows another style of main driver for a standard

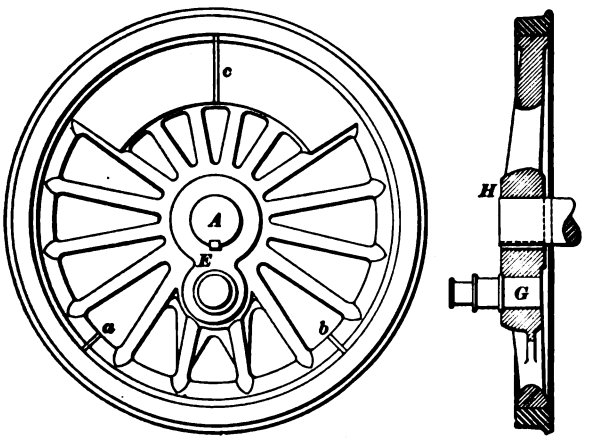

FIG. 25.

eight-wheeled engine. This wheel is cast entirely solid, but the rim is split at a, b, and c, to avoid the stresses due to shrinkage

when the casting cools. Nearly all wheel rims are thus slit. Cast-iron liners are inserted in these slits, and the tire is then shrunk on the center, as before described.

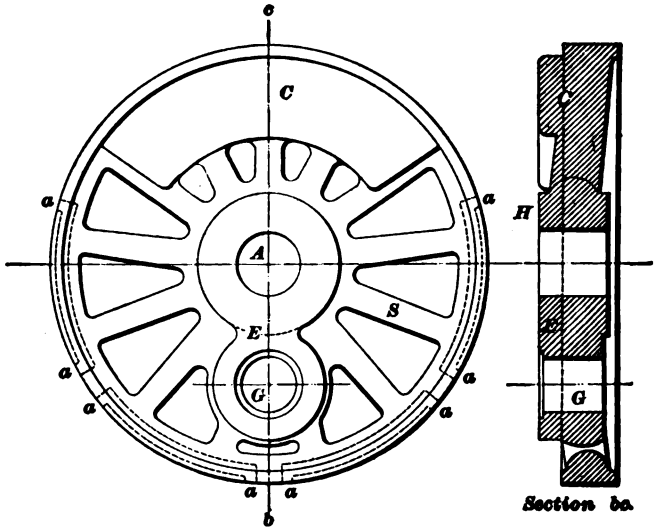

FIG. 26.

Consolidation Engine.—In Fig. 26 is shown the wheel center of the main driver for a consolidation engine. The spokes and

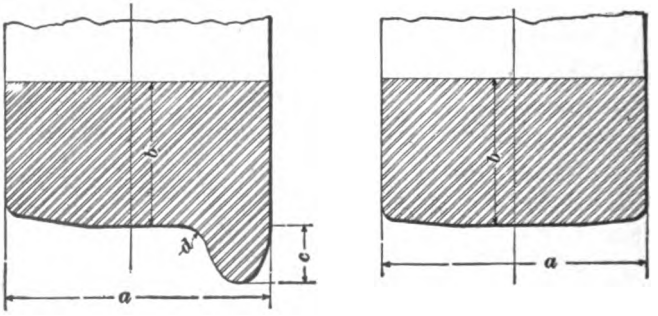

FIG. 27.

counterbalance are cast solid, while the rim is cored out, leaving openings *a* on the outer surface of the wheel center for the core

holes. These wheels are generally small in diameter, and if the counterbalance is not sufficiently heavy to meet the requirements, it is cast hollow, leaving closed chambers between the spokes, which are then filled with lead to increase the weight of the counterbalance.

74. Tires.—The drivers, as generally constructed, have **flanged tires,** and vary from $4\frac{3}{4}$ to $6\frac{1}{4}$ inches in width, according to specifications. In the larger engines, having long wheel bases and using six or more drivers, one or more pairs of drivers have *plain tires,* or **blind tires,** as they are sometimes called. The plain tires are always wider than the flanged ones; they must be made to suit the curves over which the engine has to run, and must be wide enough not to leave the track. They vary, for the different classes, from $5\frac{3}{4}$ to 7 inches in width.

In Fig. 27, sectional views are given of both forms of tires; a = the width, b = the depth, c = the height of the flange, and d = the clearance for the rail, which is a fillet having a radius of $\frac{9}{16}$ or $\frac{5}{8}$ inch.

75. Driving Box.—Fig. 28 shows a **driving box.** The driving boxes and truck boxes transfer the entire weight of the engine (less the weight of the wheels and axles, side rods, and back end of main rod) to the journals. *A* is the driving box, and *B* the oil cellar, which is filled with oil-soaked waste that keeps the bearings well lubricated. The cellar is kept in position by the pins *d, d.* The flanges *f, f* serve to retain the driving box in place, the jaws and wedges fitting between the flanges. The rectangular-shaped holes *e, e* receive the legs of the spring saddle. *C* is the driving-box brass, or journal bearing.

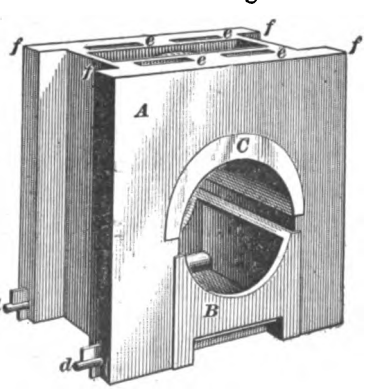

FIG. 28.

SETTING UP THE WEDGES.

76. When Steam Is Up.—In setting up wedges the idea is to take up all of the lost motion between the driving box and the wedges, leaving just sufficient freedom to allow the driving box to move up and down freely in the jaws, and to allow for expansion should the box become heated. Wedges can best be set up when the engine has steam up, although they can also be set up when the engine is cold.

Place the engine on a piece of straight, level track. To set the wedges on the right side of the engine, place the crankpin of that side on the top quarter, block the left-hand drivers so that the engine cannot move forwards, and admit a little steam into the back end of the cylinders. This tends to pull the driving boxes forwards against the shoes, leaving all of the play next to the wedge, where it can readily be taken up by raising the wedge W_2 (Figs. 19 and 20). If necessary, a pinch bar may be used to assist this action of the steam. The wedge should be set up solid and then drawn down sufficiently to give the required amount of freedom; the locknuts on the wedge bolts, and the bolts that secure the wedges to the pedestal jaws, should then be screwed up tight.

To set up the wedges on the left-hand side, place the crankpin of that side on the top quarter; then proceed as with the right-hand wedges.

77. When Engine Is Cold.—If the wedges must be set up without the aid of steam in the cylinders, proceed as follows: Place the engine on a straight, level track, as before, with the crankpin on the top quarter; block the drivers on the opposite side, and use a bar behind the drivers, on the side on which you are working, to pinch the driving boxes forwards against the shoes. The wedges are then set up as in the other method.

ENGINE TRUCKS.

78. Two styles of locomotive trucks are used—the four-wheeled and the two-wheeled truck. The truck wheels used are from 28 to 36 inches in diameter, depending on the size

of the cylinders and the amount of clearance for the wheels. High-speed engines with large driving wheels give more clearance under the cylinders than engines with smaller driving wheels, consequently, larger truck wheels can be used.

79. Four-Wheeled Truck.—A four-wheeled truck, or, an independent truck, is shown in Fig. 29. The frame *F* is riveted or bolted to the transverse bars *T*, which support the center casting *E*. The center casting contains three or four

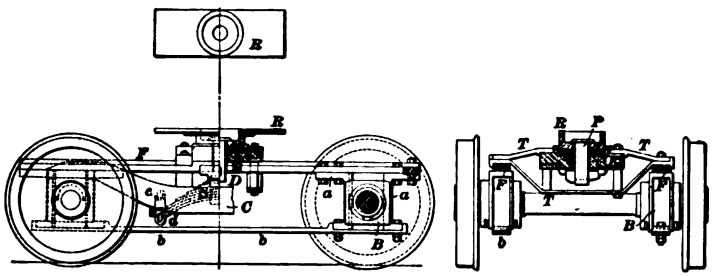

FIG. 29.

liners, on which the center plate *R* rests. The center casting and the center plate are connected by the center pin *P*. To the frames are bolted the cast-iron or wrought-iron jaws *a*, *a* that form a jaw for the truck box *B*, which is made of iron, and is quite similar to a driving box, except that no wedge and shoe are used in connection with it. The lower parts of the jaws are held together by longitudinal braces *b*, one on each side of the truck. The frame rests on the spring bands *D*, and so is carried by the springs *S* (one on each side). The truck boxes are provided with recesses in the top part for retaining the equalizing lever *C* in place. The springs are connected to equalizers by the hangers *d*, which swing on pins *c*.

The half-elliptic spring shown has of late been replaced to a certain extent by helical springs when the trucks are the two-wheeled type. The length of the truck wheel base (the distance between the center lines of the axles) must, however, be great enough to allow the wheels to clear the cylinder heads when the engine is passing around a curve.

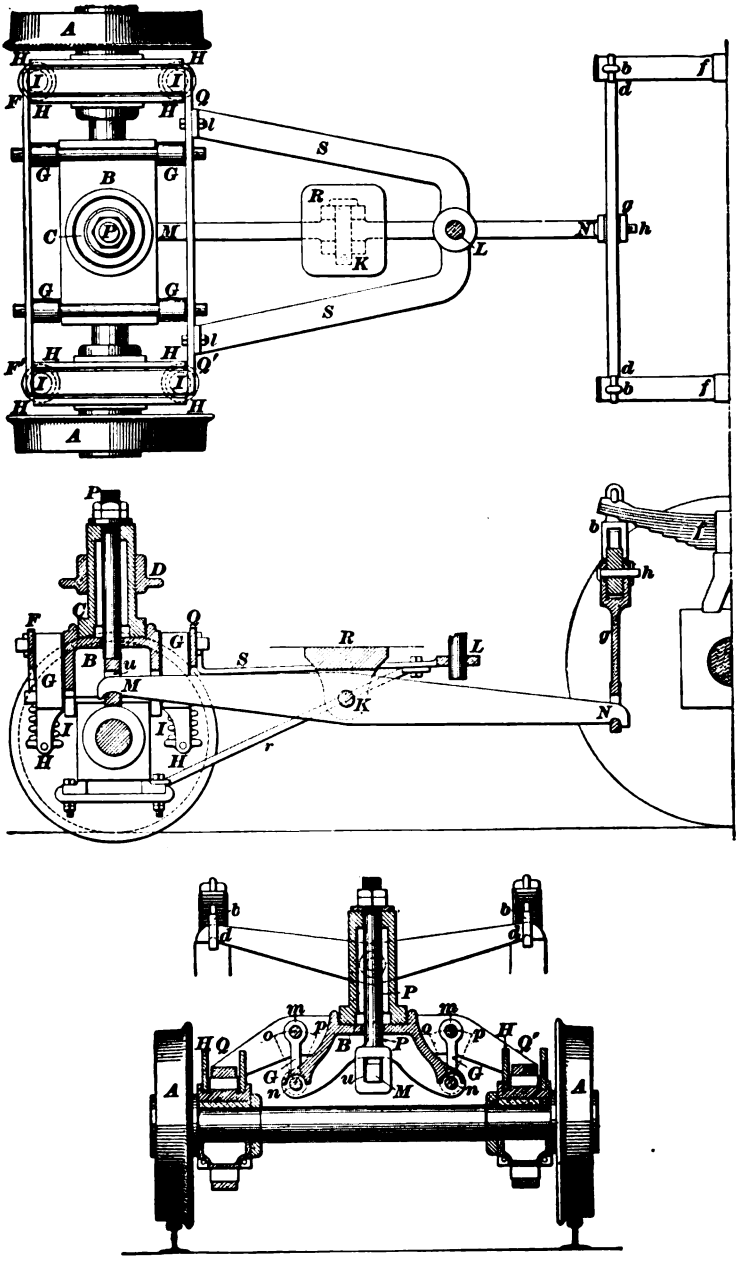

FIG. 30.

The truck wheel guards are generally fastened on the splice of the engine frame or to the truck frame. When the latter method is used, care must be taken that they clear the frame when the truck swings.

Four-wheeled trucks are used under eight-, ten-, and twelve-wheeled engines.

80. Two-Wheeled Truck.—Fig. 30 shows a two-wheeled truck in plan, sectional elevation, and cross-section. This is commonly called the **pony,** or **Bissell,** truck, and is used under mogul and consolidation engines.

The frame $FQQ'F'$ is of rectangular shape, and to it the jaw is attached. A **V**-shaped frame S, the *radius bar*, is bolted to the rectangular frame by the bolts l. The radius bar extends back under the engine, and is connected to the main frame by a crosspiece or bar (not shown), and pin L. This allows the truck to swing laterally about the pin, thus adjusting itself to the curves of the track. The bedplate of the cylinders rests upon the casting R, which is connected to the equalizing lever MN by the pin K. This lever supports the weight of the front end of the engine in the following manner: The back end N is connected to the hanger g as shown. The upper end of the hanger is attached to the transverse equalizing lever $d\,d$ by the pin h, this lever being in turn connected by the hangers b, b, to the front ends of the forward driving springs f, f. The other end M of the equalizing lever passes through the slot u of the bolt P, which is sustained by the hollow kingbolt C. The kingbolt is placed inside the casting D, which is bolted to the engine frame, and rests on the casting B (the *bolster*) which is carried by the links G, G, suspended from the truck frame $FQQ'F'$ in the manner shown, the connection being made by means of the pins m, n. A bolster that is suspended in this manner is called a "swing bolster." The truck itself is carried on helical springs I, I; yokes II, H shaped something like an inverted **U** rest on top of the boxes, and their lower ends carry castings in which sit the springs I, I. r is the pedestal brace. The remaining details should be evident from the figure.

This form of pony truck relieves the engine of a large portion of the jars and shocks due to irregularities in the track. For, suppose that there was a slight depression in the track: the truck on reaching it would go suddenly downwards, and the sudden stoppage would produce a shock. With the truck described, the pin K acts as a fulcrum, the end M of the equalizing lever going down, and the end N going up; then, as the front end of the engine comes down, the springs f are bent, causing the front end to descend very gradually, the springs absorbing the shock.

The links G, G permit the engine to pass more easily around a curve. Thus, suppose that the engine meets a curve: the

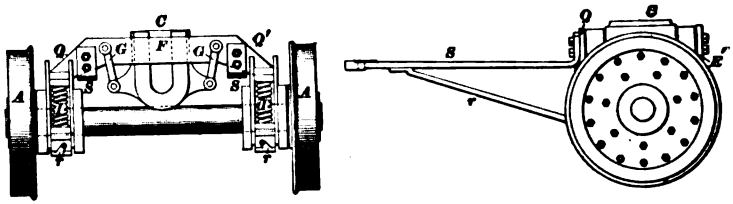

FIG. 31.

engine tends to keep straight ahead, while the flanges of the wheels A, A compel the truck to follow the curve. The consequence is that the entire truck, together with the bolster, is swung laterally to the right or left, according to the character of the curve, the links G, G swinging to the position $o\,n$ or $p\,n$, and the radius bar turning about its pin L.

Another form of pony truck is shown in Fig. 31. Here there is no equalizing lever, the radius bar being bolted to a crosspiece that is attached directly to the main frame. The construction should be evident from the cut. The kingbolt fits in a hole at C, and connects the bedplate directly to the swing bolster. The other parts are lettered the same as in Fig. 30.

Steam, Cylinders, and Valve Gears.

(PART 2.)

STEAM-PIPE CONNECTIONS AND CYLINDERS.

DOME, THROTTLE VALVE, AND STEAM PIPES.

PARTS ASSEMBLED.

1. A simple form of steam engine was described and illustrated in Art. **57**, Part 1, the boiler and engine being in that instance separate from each other, the steam being conveyed from the boiler to the engine through a steam pipe connecting the two. The engine in question is called a **stationary engine**, since it is securely fixed on its foundation, and, hence, remains stationary while operating.

A locomotive, on the other hand, is a portable steam engine, in which the boiler and engine proper are combined into one piece of mechanism and mounted on wheels. A locomotive really consists of a boiler, with its various fittings and mountings, and two engines, the engines being connected to the same driving axle, their respective cranks being set at an angle of 90° with each other.

In Fig. 1 is shown a view of a locomotive boiler with the shell broken away, to show the interior arrangement of the throttle valve, dry pipe, and steam pipes. *A* is the throttle valve; it is located in the dome and its duty is to control the supply of steam to the cylinders. *B* is the stand pipe; *C*, the dry pipe; *D*, the T pipe or *nigger head*—called the

For notice of copyright, see page immediately following the title page.

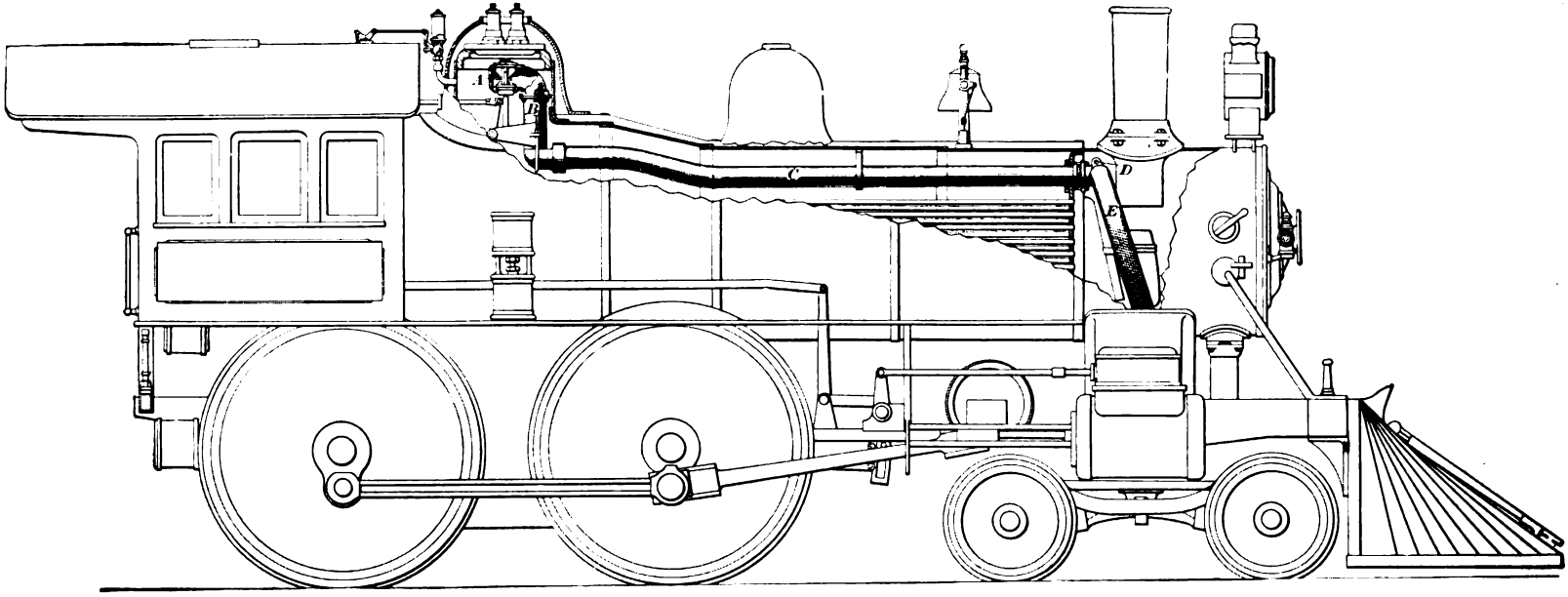

FIG. 1.

T pipe on account of its dividing with two branches like the letter T; and *E*, the steam pipes that connect with the steamways in the cylinder saddle. When the throttle valve is open, steam can pass from the boiler through the valve into the dry pipe, and thence through the steam pipes and steamways in the cylinder saddle, into the steam chests. When the throttle valve is closed, steam is prevented from passing from the boiler to the steam chests.

THE DOME.

2. The object of a **steam dome** (shown at *h*, Fig. 2) is to provide a space that is elevated considerably above the level of the water in the boiler, from which space dry steam can be drawn for use in the cylinders, etc. Besides this, the dome adds a small amount of steam space to the boiler, and forms a convenient stand for the safety valves, whistle, etc.

The steam dome is usually placed on the highest part of the boiler, in order that the throttle valve within may be as high above the surface of the water as practicable, the throttle valve being so placed as to prevent, as far as possible, the spray or fine particles of water thrown up by the violent boiling from being carried along with the steam through the throttle valve and into the cylinders. Boilers in which the crown sheet is supported by crown bars generally have the dome placed well to the back of the boiler and over the firebox; in boilers having radial-stayed crown sheets the dome must be placed farther forward, as it would interfere with the proper staying of the crown sheet were it directly above this sheet.

THE THROTTLE VALVE.

3. Slide-Valve Throttle.—The general practice in locomotive work is to place the **throttle valve** inside the dome. In old styles of locomotives, however, the throttle valve has been placed at the front end of the boiler, or else in the smoke-box close to the tube-sheet. When placed in either of these positions, it consists simply of a plain slide-valve arrangement, and is operated by a lever in the same way as the ordinary type

of throttle valve. Slide-valve throttles, however, are objectionable, as they are subjected to considerable pressure, and are therefore hard to handle. A slide-valve throttle is subjected to the greatest pressure when closed, as then there is no pressure in the dry pipe to act on the under side of the valve; hence, the throttle works hardest when it is being opened—just when it ought to work easiest. On account of this, it is difficult to properly regulate the admission of steam to the cylinders in starting the engine, and for that reason the slide valve is now seldom used as a throttle valve.

4. Double-Poppet Valve.—The form of throttle valve generally used is very similar to that illustrated in Fig. 2, which, as will be seen, is in the form of a **double-poppet valve.** The valve consists of the two disks *a*, *b* of unequal

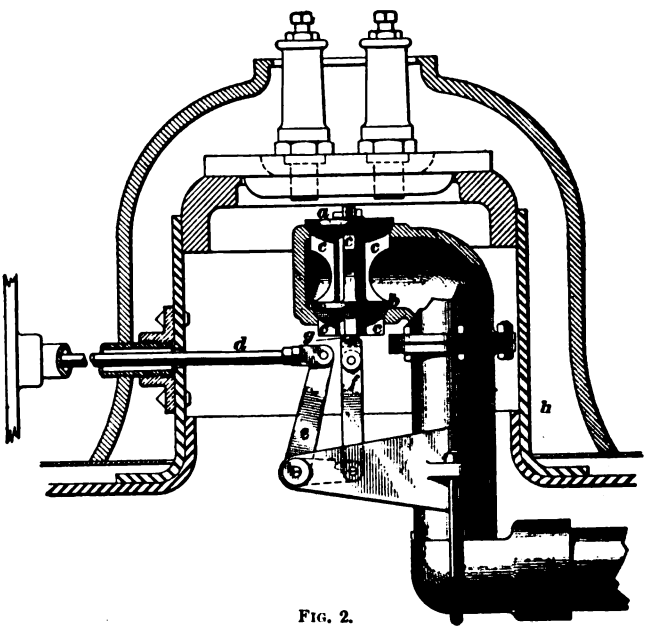

FIG. 2.

diameters, cast with suitable wings *c*, *c*, which act as guides. The lower edges of the disks are beveled and are carefully ground on their seats until they make a steam-tight fit.

There are several reasons for making the disk *b* smaller in diameter than the disk *a*: *first*, by making *b* the smaller, it can pass through the opening for the disk *a*; and *second*, the disk *a*, being the larger, is subjected to a greater total pressure than the disk *b*; hence, it prevents any tendency of the valve to work open. It will be noticed that the upper face of disk *a* and the lower face of disk *b* are acted on by the steam pressure in the boiler when the throttle is closed. Now, if the two disks presented equal areas to the pressure of the steam, the upward pressure on disk *b* would balance the downward pressure on disk *a*, and, neglecting the weight, the valve would be perfectly balanced; any sharp jar, therefore, would tend to cause the throttle to fly open and admit steam to the cylinders. By making the area that is exposed to steam pressure slightly larger in the case of disk *a* than of disk *b*, the valve is held closed by the difference in total pressures on the disks (to say nothing of the valve's weight), while at the same time the throttle will work comparatively easy.

The throttle valve is operated by a lever called the *throttle lever*, which is connected to the valve by means of the throttle stem *d*, bell-crank lever *e*, link *f*, and valve stem *g*. The valve is made to fit the valve stem *g* quite loosely, so that both disks of the valve are free to set squarely on their seats.

5. Pitkin Throttle Valve.—The small and medium sizes of double-poppet valves similar to that just described work satisfactorily, as they are fairly well balanced. Those of larger size, however, such as must be used with engines of the larger classes, are not so well balanced; hence, they work less satisfactorily, being harder to open. Also, they are harder to keep steam-tight, since the difference in the expansion of the valve and its seat, as well as the total pressure to which the valve is subjected, increases with the size of the valve.

The **Pitkin valve**, Fig. 3, was designed with the idea of overcoming these difficulties. It consists of two smaller valves, instead of one large one, so connected to each other and to the throttle lever that they can be opened one at a time by means of the same throttle lever. By using two valves of moderate

size, instead of one large one, the same, or a greater, valve opening can be obtained, thus giving the required volume of steam, and the tendency of the valve to leak (due to the expansion of the metal) will be less.

In the figure, view (*a*) represents the throttle valve and stand pipe, with part of the valve case removed to show the two valves *A* and *B* within. These valves, it will be observed, are of the double-poppet type.

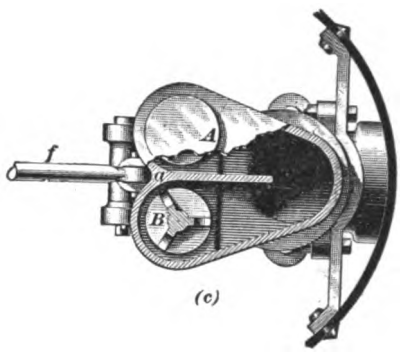

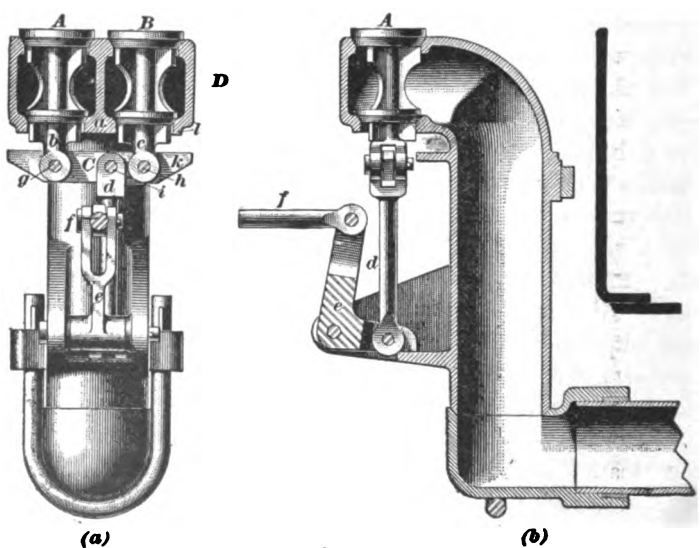

FIG. 3.

View (*b*) shows a section taken through the center of the throttle-valve case, the valve *B* being removed. View (*c*) is a plan view, the valve case being broken away to show the partition *a* which separates the chambers of the valves *A* and *B*.

The stems *b* and *c* of the valves are both connected to the crosshead *C*, while the crosshead is connected to the throttle lever by means of the link *d*, bell-crank lever *e*, and throttle stem *f*. It will be noticed, however, that the pin *i*, which connects the link *d* to the crosshead *C*, is located nearer to pin *h* than to pin *g*; this arrangement makes it possible to open the valves one at a time. When the throttle is closed, the steam exerts an equal force on the valves, tending to hold them on their seats. When the throttle lever is moved, however, the force with which the link *d* tends to raise the valves is not exerted equally, the greater force being exerted on the valve *B*, owing to the point of connection of *d* and *C* being nearer to the stem of this valve than to that of valve *A*.

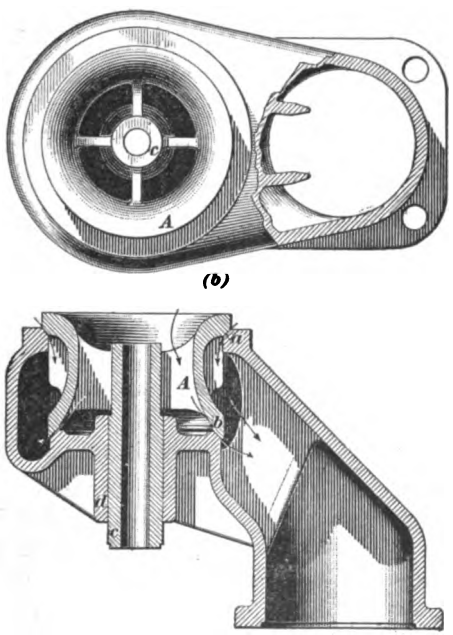

FIG. 4.

When the throttle lever is moved in the direction to open the throttle, it causes the valve *B* to be raised first. This valve may be opened wide at once, or it may be opened a little at a time, as required, until practically wide open, the valve *A* remaining closed meanwhile. When the valve *B* is opened, steam is admitted to throttle pipe *D*, and exerts a pressure on the inside faces of valve *A*, partially balancing it, thus making the valve open easily. In opening the valve *B*, as soon as the end *k* of the crosshead strikes against the lug *l* on the valve case, this lug acts as a fulcrum for the lever *C*, and any

further movement of the throttle lever will cause the valve *A* to be raised from its seat, thus opening the complete throttle valve its full amount. The valves also close one at a time, the valve *B* closing first.

6. Vogt Throttle Valve.—A style of throttle valve used quite extensively on the Pennsylvania Railroad is shown in Fig. 4, in which (*a*) is a section through the middle of the valve and throttle pipe, and (*b*) is a plan view showing part of the valve case broken away. The valve, which is marked *A*, is ground to a steam-tight fit on its seats *a* and *b*, and is made of such a form that it is as nearly balanced as practicable. The stem *c* works in the guide *d*, which insures the valves seating properly. When the throttle is open, steam flows between the valve and its seats *a*, *b*, as shown by the arrows in view (*a*).

7. Throttle Lever.—The throttle valve is operated by means of a bell-crank lever, one arm of which connects with the valve stem, and the other with the throttle stem. The throttle stem must pass from the inside to the outside of the boiler, and it is made to work steam-tight by means of a stuffingbox placed either in the back head of the boiler or on the side of the dome, or, in some instances, on the top of the boiler. The throttle stem is connected with the throttle lever by means of which the engineer operates the throttle valve.

Fig. 5 shows a form of **throttle lever** that is suitable for engines in which the throttle stem passes through the side of the dome. View (*a*) represents the throttle lever as seen from the back end of the boiler. It shows how the lever is supported by the stand *S*, which rests on, and is securely fastened to, the top of the boiler. View (*b*) is a plan of the throttle lever, while view (*c*) is a sectional view of the stuffingbox *B* in the stand *S*. It will be observed that, as usual, one end of the stuffingbox has been bored out to receive the packing and the gland *G*. The other end is bored out and tapped, and a wrought-iron pipe *P* screwed into it. This pipe is long enough to reach from the stand *S* to the dome, and it has a brass flange screwed on to its end, which is riveted to the outside of the dome, as in Fig. 2. The bore of the pipe *P*

is made larger than the diameter of the throttle stem that passes through it, so as not to interfere with the free movement of the latter, the pipe acting as a protection to the rod, and also enabling us to locate the stuffingbox inside the cab.

The throttle lever consists of the lever proper, marked *L*, and the rack *R*, latch *A*, link *l*, and handle *C*, which form a

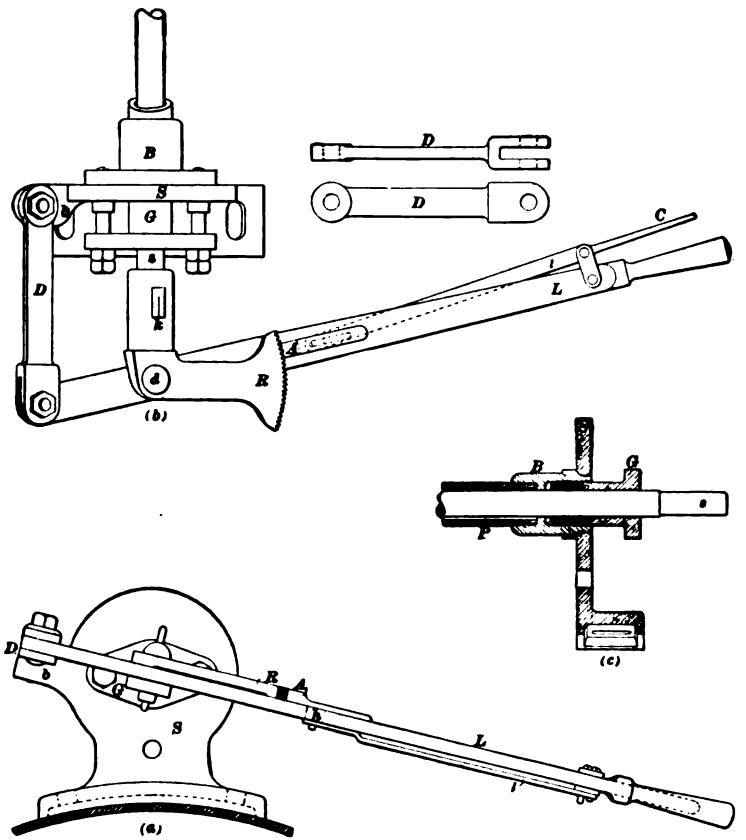

FIG. 5.

locking arrangement, by means of which the throttle can be locked in any position desired. The link *D* connects the throttle lever to the lug *b* on the stand *S*, and serves as a fulcrum for this lever. The rack *R* is keyed to the throttle stem *s* by the key *k*, as shown, and is connected to the throttle

lever by means of the pin *d*. It is provided with a number of teeth, the pitch of which is made as small as possible in order that the throttle valve may be opened or closed a very little at a time, thus giving a good regulation of the steam supply.

In the end of latch *A* are three or four teeth that engage with the teeth in rack *R*. A lug *h*, cast on the bottom of the latch, slides in a slot in the lever, and forms a guide for the latch. The latch is connected to the handle *C* by the link *l*, so that pressing the handle towards the throttle lever raises the latch and disengages it from the rack, thus leaving the lever free to move. Engaging the latch with the rack locks the lever in position. When the throttle lever is in the position shown in the figure, the throttle valve is closed. Pulling the lever outwards from the stand opens the throttle valve, the throttle being wide open when the lever is in its extreme outward position.

8. Regrinding a Throttle Valve.—Whenever a throttle valve shows signs of leaking, it must be **reground.** To do this, emery is used, and the valve is ground on its seats until a perfect fit is obtained all around on both the upper and lower valve seat. Both disks should then be wiped clean of all emery, and the valve given sufficient extra turns to wear a polish on the valve and its seat. This insures a tight joint when under steam, since the expansion of the valve when heated is practically the same as the expansion of the seats. To determine whether the throttle is leaking, close the throttle, place the reverse lever in full gear, and open the cylinder cocks; a leak will be indicated by steam escaping from the cylinder cocks. The steam supply to lubricator should be shut off while making this test, or the steam coming from lubricator into steam chest will mislead one.

STEAM PIPES.

9. The **steam pipes,** as was explained in connection with Fig. 1, are located in the smokebox—see *E*, *E*, Fig. 6, view (*a*)—and connect the **T** pipe with the steamways *a*, *b* in the cylinder

saddle that lead to the steam chests. The steam pipes are made to conform quite closely to the shell of the smokebox, for the reason that they are then removed from in front of the flues as much as possible, and hence interfere the least with any work that may have to be done on the flues. Also, when so curved, the ill effects of the expansion and contraction, due to the great changes of temperature in the smokebox, are very much reduced.

Owing to variation in the lengths of the steam pipes due to expansion and contraction, it is rather difficult to keep the joints at the top and bottom ends steam-tight; it has been found that to obtain the best results, a form of joint must be used that has a certain amount of both flexibility and adjustability. Fig. 6, view (*b*), illustrates a form of joint that is now in general use. It is made by placing a ring *r* of brass or cast iron in the steam-pipe connection. When such a joint is used, the steam pipe can be moved slightly on its seat in any direction without the joint leaking, while at the same time it is sufficiently flexible to take care of the contraction and expansion of the steam pipe. After being carefully ground in, this joint is bolted up, as shown.

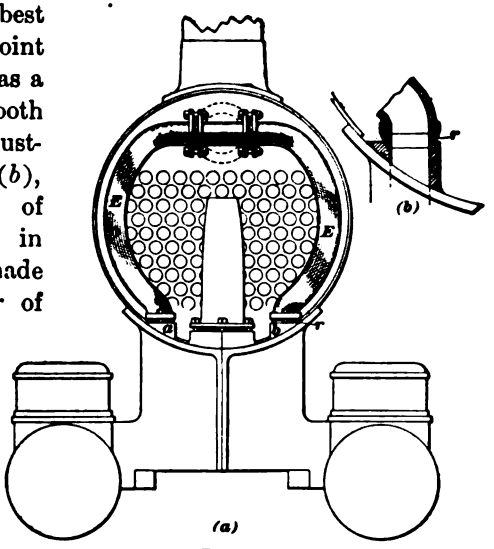

FIG. 6.

10. Leaky Steam Pipes.—A comparatively small leak in any of the joints of the steam pipes will make an engine steam badly (see Art. **31**, *Locomotive Boilers*, Part 1). For this reason the steam-pipe joints must be kept perfectly steam-tight,

being reground as soon as possible after a leak occurs. A leaky steam pipe is indicated by its effect on the fire and by the sound it makes, the sound being very similar, though less in volume, to that made by the blower. Also, the sound will be more distinct when the fire-door is open. To locate the leak, open the smokebox door, and then, with the reverse lever in mid-gear open the throttle slightly—the leak will be indicated at once by steam escaping.

CYLINDER SADDLE AND CYLINDERS.

THE CYLINDER SADDLE.

11. Saddle Construction.—In order that the steam cylinders may be fastened rigidly together and secured firmly to the boiler, they are attached to a casting called a bedplate, or *saddle*, which is placed between them. Two methods of construction are used for fastening the cylinders together by means of a **cylinder saddle.** One (now seldom used), illustrated in Fig. 7 (*a*), consists in casting the cylinders *A* separately from the saddle *B*, and then fastening the cylinder to the saddle by means of bolts *a*, *a* passing through the flanges *c*; the other, illustrated in view (*b*), consists in casting one cylinder and half of the saddle in one piece. The two halves of the saddle are then bolted together by means of the bolts *a* and the flanges *c*. The latter method is the one most frequently used. It requires but one pattern for an engine, as a cylinder with its half saddle can be used for either side, there being no rights and lefts. Method (*a*) requires two patterns—one for the saddle and the other for the cylinders; one pattern serving for the two latter.

12. Steam and Exhaust Passages.—A plan of a half cylinder saddle and cylinder is shown in Fig. 8, in which the steam chest and also the slide valve are removed to show the valve seat. *A* is the end of one of the steam passages in the cylinder saddle, one of which leads to each cylinder; it connects with one of the steam pipes, and leads by means of two branches

to the supply ports x and y opening into the steam chest. The duty of the steam passage is to conduct steam from the steam pipe to the steam chest, admitting it through the ports x and y. B is one of the exhaust passages in the saddle, one of which leads to each cylinder. This passage connects the

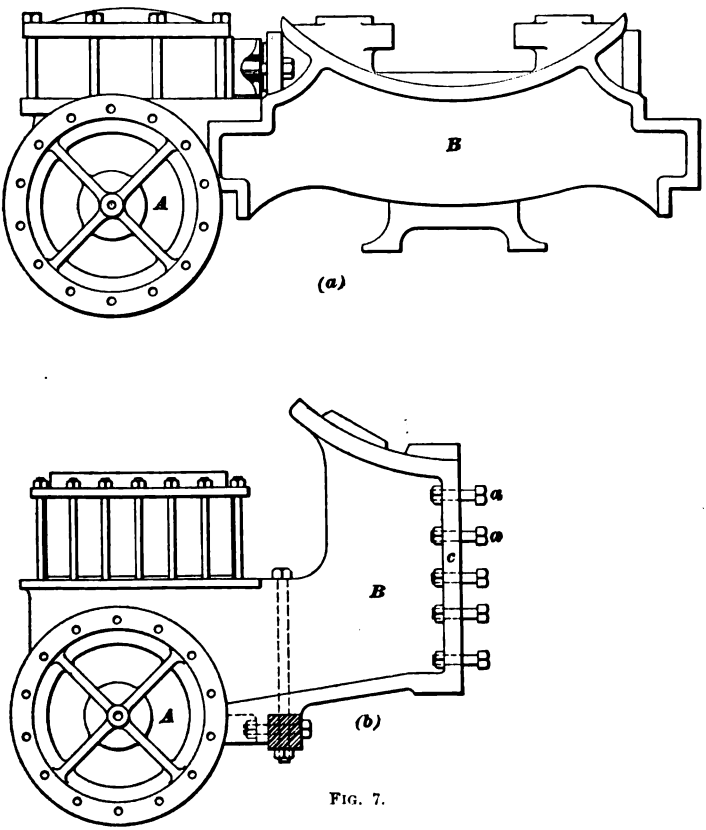

FIG. 7.

exhaust port c in the valve seat with the exhaust pipe in the smokebox. Its duty is to conduct the exhaust steam from the port c to the exhaust pipe.

Fig. 9 shows a section of a cylinder and half saddle, taken through the port c and the passages A and B, Fig. 8. It shows the exhaust passage B from the exhaust port c to the end that

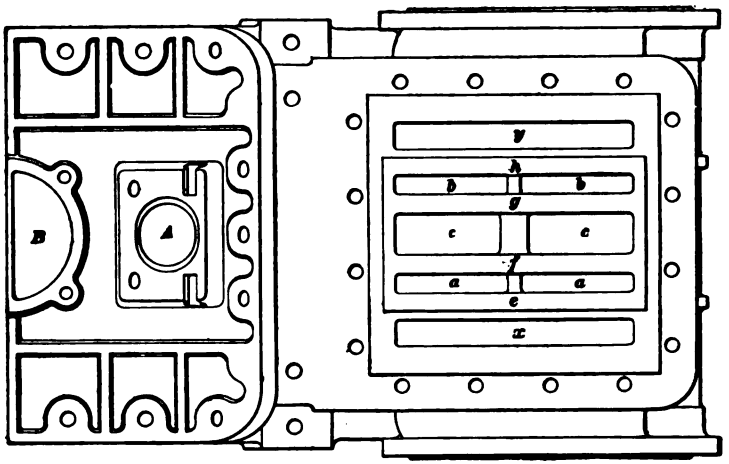

FIG. 8.

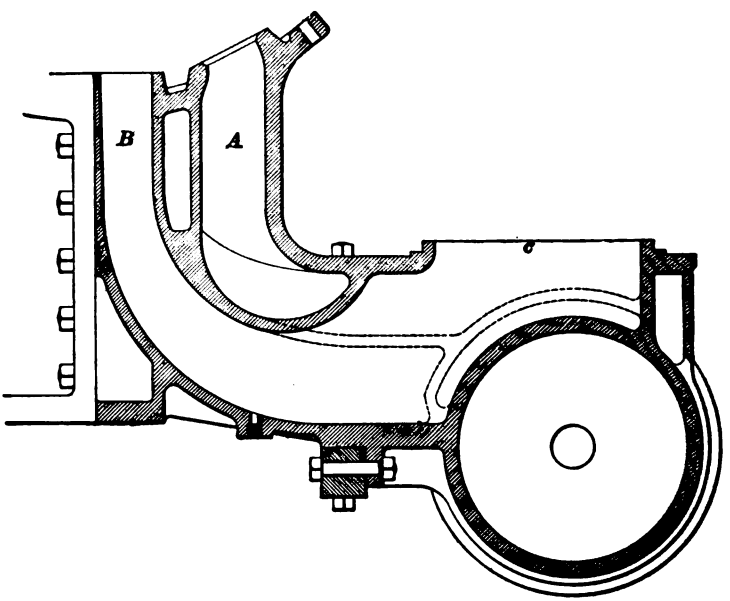

FIG. 9.

connects with the exhaust pipe; it also shows part of the steam passage *A*. This steam passage widens and divides into two branches, one passing on either side of the exhaust passage, as indicated by the dotted lines.

Fig. 10 shows the form of the passages; that is, if a core of each passage could be obtained, that of the exhaust passage would resemble view (*a*), and that of the steam passage would resemble view (*b*). In view (*a*), *B* is the end to which the exhaust pipe is connected, while *c* is the exhaust port in the valve seat. The steam passage, it will be observed, divides into two branches that connect with the ports *x* and *y* in the valve seat. In their regular positions, the steam-passage core would straddle the exhaust-passage core, one of the branches being on either side.

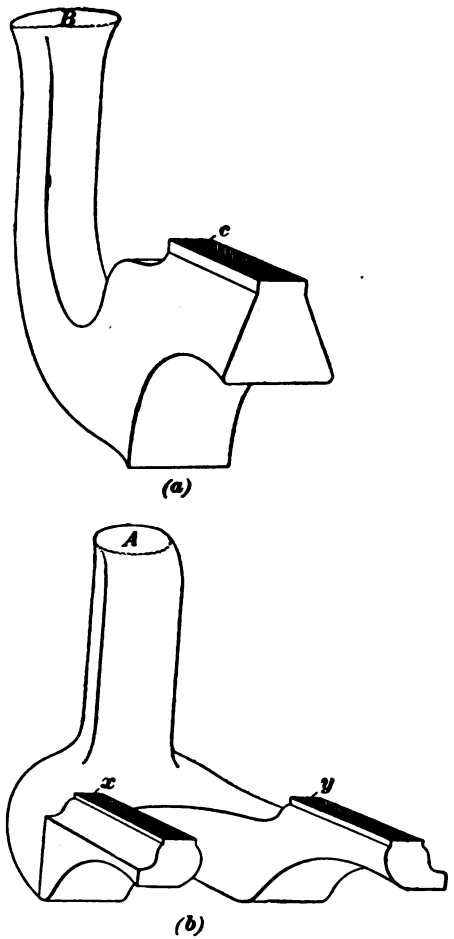

FIG. 10.

In Fig. 11, the cylinder saddle and cylinder are represented as being transparent, so as the more clearly to show the actual relative positions of the steam passage *A* and the exhaust passage *B*. The steam ports *a* and *b* in the valve seat, the

former of which is situated between the exhaust port *c* and the supply port *x*, and the latter between the exhaust port *c* and the supply port *y* (see Fig. 8), have here been purposely omitted so as to make the figure clearer. It will be observed that steam passes from the steam pipe *A* to both of the supply ports *x* and *y*.

It may be mentioned that there are several reasons for branching the steam passage *A* in the manner here shown:

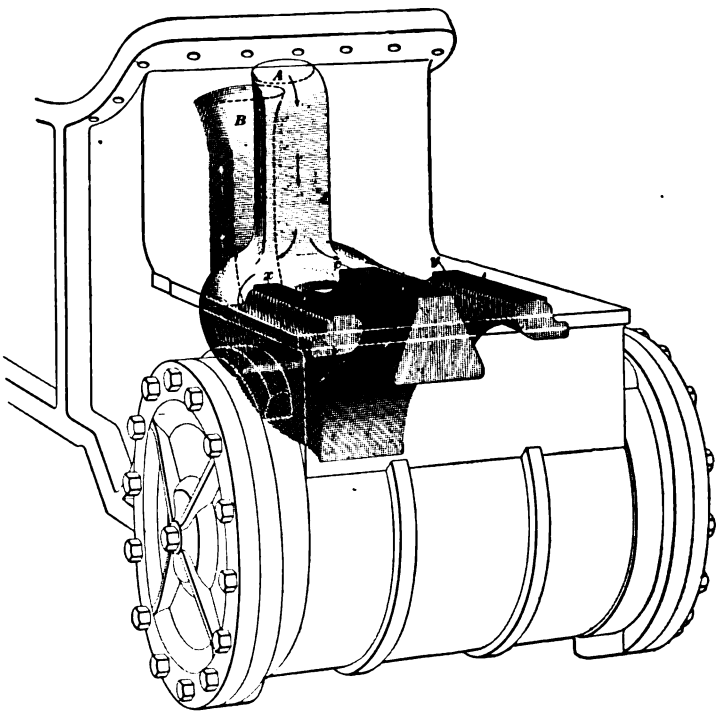

FIG. 11.

first, it results in the steam being supplied to both ends of the steam chest, in consequence of which the steam can pass equally well into either end of the cylinder; *second*, the cylinder and half saddle for each side of the locomotive can be made from the same pattern; and *third*, the cylinders can be used interchangeably.

CYLINDERS.

13. The **cylinders** are cast from a grade of cast iron that is both hard and homogeneous in structure. The iron should be as hard as can be conveniently worked during the processes of boring, planing, drilling, etc., in order that it may better resist the wearing effect of the piston and the slide valve; it should be homogeneous in order that it may wear equally. The cylinders are counterbored at each end about $\frac{1}{4}$ inch larger in diameter than the diameter of the cylinder; the width of the counterbore being such that the near piston ring will overtravel it a short distance at either end of its stroke. The object of the counterbore is to prevent the formation of a shoulder in the cylinder at the end of the piston travel, which would be objectionable if the range of piston travel should be changed when letting together the brasses of the main rod. The cylinder heads are ground in with oil and emery until they make a steam-tight joint with the cylinder flanges, to which they are secured by means of stud bolts. To prevent radiation of heat, the body of the cylinder is covered with lagging, while the head and steam chest are provided with a casing. The lagging usually consists of a layer of asbestos, magnesia, wool felt, or some similar substance that is a poor conductor of heat, held properly in place and covered with a jacket of Russia iron.

CYLINDER AND STEAM CHEST.

14. In Fig. 12 a sectional view of a **locomotive cylinder** and **steam chest** is given, in which C is the cylinder; P, the piston; S, the steam chest; and V, the slide valve. k and s are the front and back cylinder heads, respectively; ports a and b are called the steam ports; port c is the exhaust port, and d is the exhaust cavity in the slide valve; p is the piston rod, and j the valve stem, both of which work steam-tight through the packings m and n, respectively. The partitions f and g between the steam ports and the exhaust port are called *bridges*. The raised portion that is marked $e\,f\,g\,h$ is planed smooth and level, and forms the slide-valve seat. The steam ports a and b conduct steam both to and from the front and back ends

of the cylinder, respectively. The exhaust port c connects with the exhaust passage B, Fig. 8, which leads to the exhaust pipe, while the supply ports x and y connect with the steam passage A in the saddle, Fig. 8.

On top of the steam chest is the steam-chest cover; stud bolts are screwed into the cylinder, and the steam chest and cover

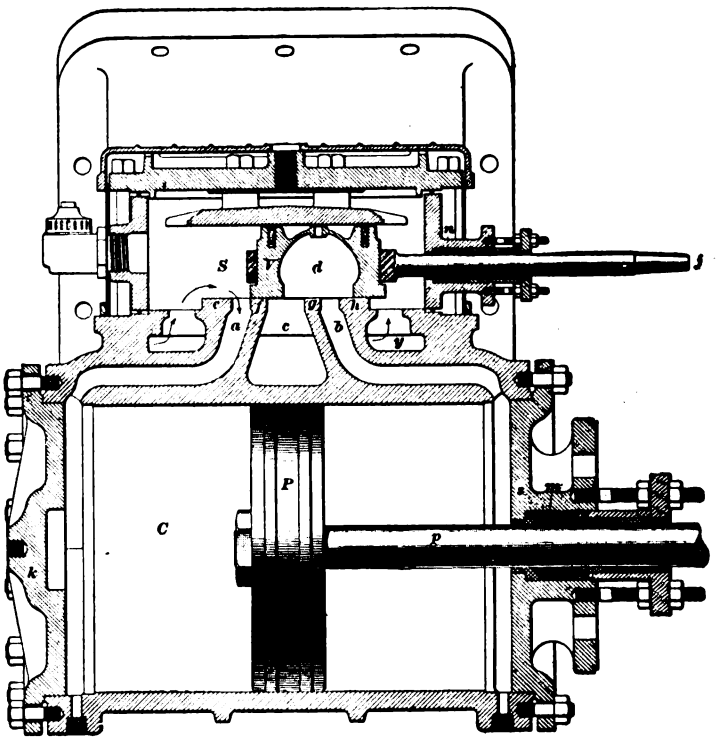

FIG. 12.

bolted up together at one operation. Over the steam-chest cover is placed a thin casing, as shown in the figure. The joint between the cylinder and steam chest and also that between the latter and its cover is made by means of a copper wire.

The operation of a steam cylinder was fully explained in Art. 55, Part 1.

DRIVING GEAR.

ASSEMBLY OF PARTS.

15. In Fig. 13 is illustrated the combination of parts which, considered together, form what is generally spoken of as the **driving gear** of a locomotive. It consists (on each side of the engine) of the piston *P*, piston rod *p*, crosshead *H*, guides *G*, main rod *M*, side rod *S*, and cranks *C*, of which *k* and *c* are the crankpins. The driving gear is exactly the same for both sides of the engine, with the exception that some of the parts are made *rights* and *lefts*. When steam is admitted to the steam cylinder, it exerts a force on the piston that causes it to move, and this movement is transmitted to the driving wheels through the medium of the main and side rods, causing the wheels to revolve. It will be seen that the action of the locomotive in causing the driving wheels to revolve is similar to the action of a stationary engine in rotating the flywheel. In the locomotive, it may be remarked, the crank is cast as part of the driving wheel, whereas in the stationary engine, it is on the shaft or axle, being either solid therewith or else made separate and keyed on.

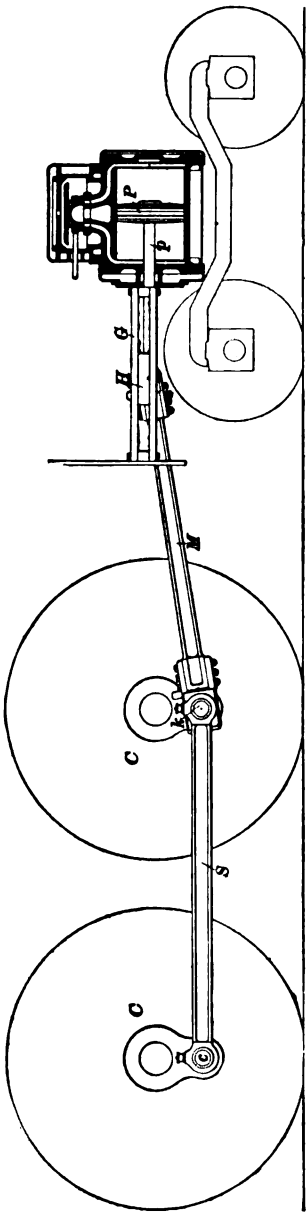

FIG. 13.

THE STEAM PISTON.

OLD-STYLE PISTON.

16. There is such a large variety of **pistons** in use, and they differ so greatly in construction, that it would be useless to attempt to describe them all; hence, only a few types will

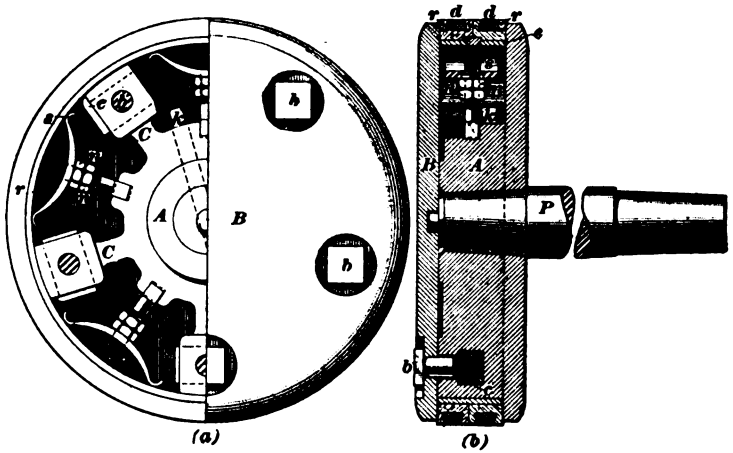

FIG. 14.

be illustrated, comprising one or two that have heretofore been widely used, together with others of more modern type.

Figs. 14 and 15 illustrate two forms of pistons that have been used for a number of years, and are still in use to some extent. In Fig. 14, view (*a*) represents the front face of the piston, with half of the follower plate removed to show the packing springs and packing-bolts and nuts. View (*b*) is a section of the piston taken through its center. The body of the piston is made in two parts; that marked *A* is called the **spider,** and it is to this piece that the piston rod is attached by means of the key *k*. The piece marked *B* is called the **follower plate.** The two are secured together by means of the bolts *b*, called the **follower bolts.** These bolts screw into brass nuts *c*, fitted into recesses in the arms *C*. It is necessary to use brass nuts,

because if the bolts were screwed directly into the spider, they would rust fast, and it would then be difficult to remove them to take off the follower plate.

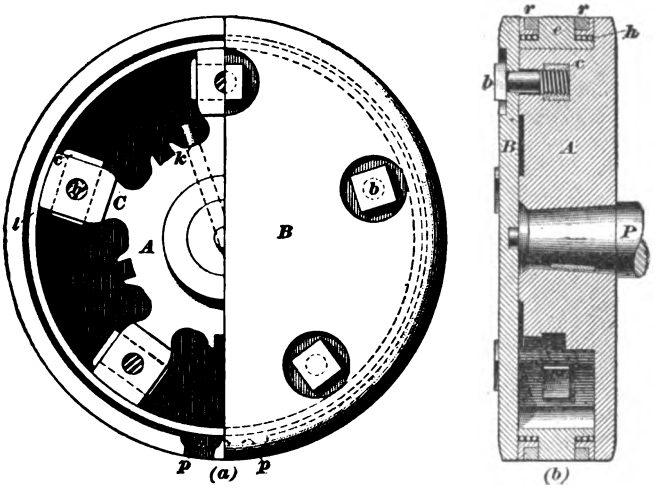

The piston is made to work steam-tight in the cylinder by means of the two packing rings *r*, *r*, which are held against the walls of the cylinder by the springs *s*, called **packing springs,** the tension of which can be regulated by means of the nuts *n*, *n*. The packing rings are of brass and contain grooves *d*, *d* filled with Babbitt. The ring *e* is made of cast iron, and its function is to transmit the pressure of the springs equally to the packing rings. The piston is held centrally in the cylinder by properly adjusting the tension of the springs.

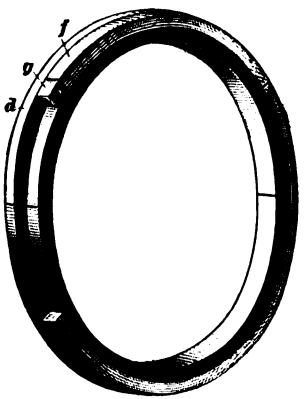

FIG. 15.

The piston shown in Fig. 15 is of simpler construction than that shown in Fig. 14, and is now more generally used. (Corresponding parts of the pistons are marked by the same letters.) In this piston the packing springs *s* are done away with. The

spider and follower plate are, as before, made to fit loosely in the cylinder, the whole being made to work steam-tight by means of the packing rings r, r. These rings are of the **Dunbar** type, a type that has been used extensively in the past and is again coming into favor on many roads. A good idea of the construction of this packing can be obtained from view (c). The packing consists of two rings, one d of L-shaped cross-section, and the other f of square cross-section. Each ring is cut into several sections (four in this case) and the pieces are made to break joints, as shown in view (c); a square piece g about 1 inch long is riveted in the middle of one of the L-shaped pieces so as to prevent the rings turning relatively to one another, and thus not breaking joints. The packing rings are held out against the walls of the cylinders when steam is not being used by three round steel wire springs h, view (b).

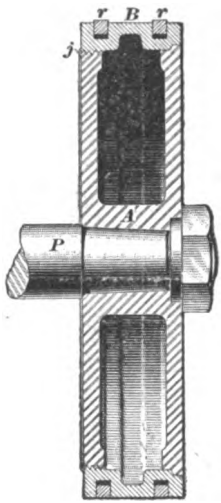

FIG. 16.

MODERN TYPES.

17. Figs. 16 and 17 illustrate two pistons of more modern construction than those just described. Each is made in two parts, the spider A being of cast steel, and the ring B of cast iron; steel is used so as to decrease the weight of the piston as much as possible. The ring B of the piston shown in Fig. 16 screws on to the spider, as shown, and the joint on the opposite side at j is riveted over to prevent the ring from working loose. The ring B, Fig. 17, is turned up $\frac{1}{100}$ inch smaller in diameter than the spider, and is then shrunk on. The ring and spider are fastened together with a number of bolts b that pass through the spider and also through lugs on the ring. The ring, at its bottom, is enlarged in width—about $1\frac{3}{4}$ times. This is done for the purpose of increasing the wearing surface without increasing the weight of the piston unnecessarily. In this design the cylinder heads conform to the shape of the piston,

so as not to increase the steam clearance space. Soft cast-iron packing rings r, r are used with both pistons, the rings being sprung into grooves provided for them in the ring B. By either of the foregoing constructions it is possible to make a piston equally as strong as the ordinary form, while at the same time it is considerably lighter.

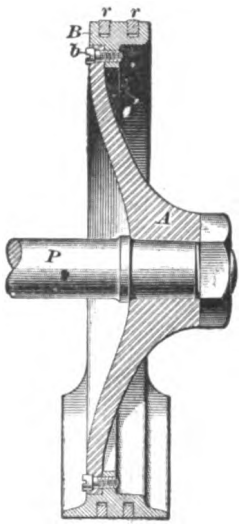

FIG. 17.

METALLIC ROD PACKING.

18. Advantages of Metallic Packing.—The piston rod is made to work steam-tight through the cylinder head by the use of some form of packing. Formerly, piston-rod packing consisted simply of some fibrous material, as, for example, hemp, but the modern practice is to use a metallic packing, which is less liable to blow out and also reduces the friction and, consequently, the wear on the piston rod. There are several forms of metallic packing in general use, among which are the *United States* and the *Jerome*.

19. United States Metallic Packing.—A sectional view of this metallic packing is shown in Fig. 18. It consists of the gland C that is bolted to the stuffingbox S, some Babbitt rings, and a spring, suitably arranged. A steam-tight joint is made between the gland C and the stuffingbox S by means of the two gaskets n, n. The packing consists of the three Babbitt rings c, d, and e contained in the vibrating cup b, the interior of which is in the form of a cone. One face of the brass ring a is turned spherical, so as to form a joint with its seat similar to a ball joint, while the other face is flat and forms a flat joint with the cup b. The brass ring f, called the *follower*, bears against the face of the ring e, so that the tension of the spring g is always exerted to keep the packing rings, vibrating cup b, and the ring a in position. This tendency of the spring and of the

steam to force the rings into the cup *b* and cause the rings to contract in diameter and grip the piston rod hard enough to make a steam-tight joint. The function of the spring *g* is to hold all the parts in place during the return stroke of the piston when the back end of the cylinder is open to the exhaust. It will be observed that only the Babbitt rings come in contact with the piston rod; also, that the packing may have a direct sliding movement upon the face between the cup *b* and ring *a*; or it may have a rocking motion between the ring *a* and the cap *C*; or it may have both motions at the same time, so that the packing will not cramp on the rod. *O* is an oil cup that feeds into the swab cup *h*, *i* being the swab.

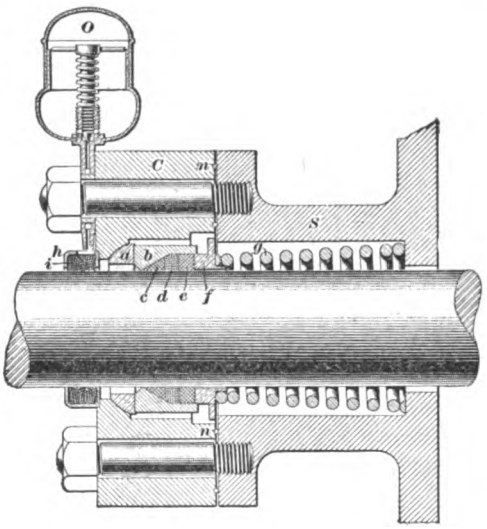

FIG. 18.

Fig. 19 is a section of the metallic packing as applied to a valve stem. It will be seen that this is practically the same as the piston-rod packing, but few changes being necessary to adapt it to the valve stem. A babbitted bushing *j* is placed in the stuffingbox to sustain the weight of the stem and yoke, and, as this is liable to wear the valve stem, the cap *C* must be lengthened sufficiently for the packing to be beyond the worn spot in the valve stem V, otherwise, the worn spot would cause a leak. The preventer *i* is made necessary by the lengthening of the cap *C*.

20. Multiangular Packing.—An improved form of the United States metallic packing, known as the **multiangular,**

is shown in Fig. 20. Comparing this with Fig. 18, it will be seen that the improvement in the present packing lies in the bore of the vibrating cup *b*. In the old-style cup this bore is made

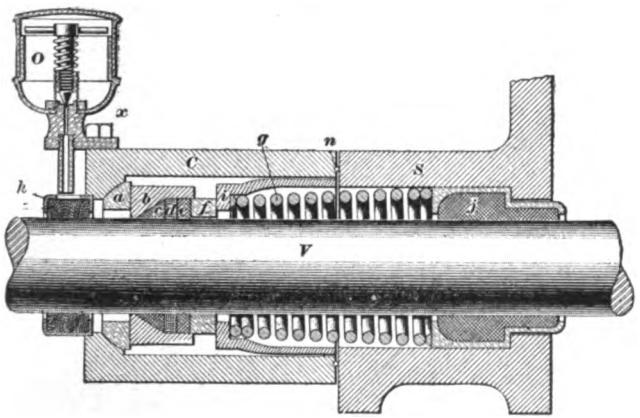

FIG. 19.

parallel with the rod for some distance, and then makes an angle of 35° with it. In the present cup the bore first forms an angle of 15° with the rod, and then one of 45°; hence the name *multiangular*. In the old-style cup, as the pressure of the steam and the spring *g* forces the packing rings into the cup, the 35° angle between the cup and the ring *c* causes that ring to contract more in diameter, and, hence, to grip the rod considerably harder than the rings *d* and *e*; consequently, the wear of the rings *c* and of the rod is greater than it would be were the grip of the rings more nearly equal. The two angles of the improved cup are intended to overcome this defect, for,

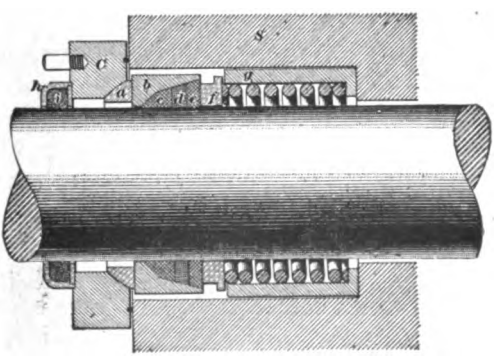

FIG. 20.

as the rings are forced forward, the two angles cause all three rings to contract in diameter. A packing of the old type may be changed to the present form by removing the cup and rings and inserting those of the new type in their place.

21. Jerome Metallic Packing.—A sectional view of the **Jerome metallic packing** is shown in Fig. 21 (*a*), while in (*b*) one of the packing rings is shown open, ready to be closed

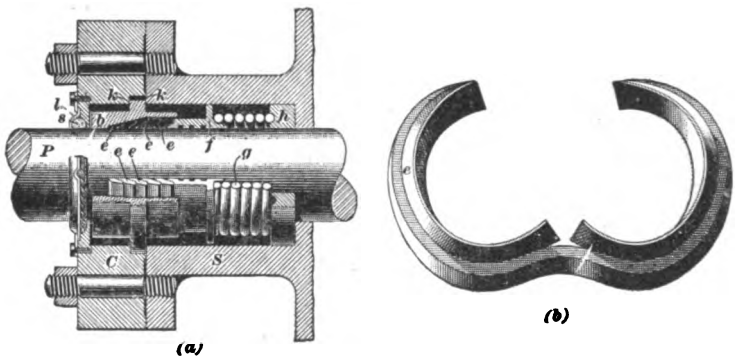

FIG. 21.

around the piston rod without disconnecting the rod from the crosshead. In the figure, *P* is the piston rod; *C*, the gland, or cap; *S*, the stuffingbox; *b*, the cone or packing case; *e*, *e*, the packing rings; *f*, the follower; *h*, the back bushing ring that forms a seat for the spring *g*; *k*, *k* are ground joints between the flange of the cone *b* and the cap and stuffingbox; *l* is a swab case, and *s* a swab for wiping and lubricating the piston rod. The packing rings *e*, view (*b*), are split so that a rod can be packed without uncoupling it. The Jerome valve stem packing is similar to the United States packing, except that it is provided with a heavy brass setscrew for clamping the valve stem if the engine is disconnected. This setscrew is similar to the one shown at *x*, Fig. 19, except that it is long enough to reach the stem when the oil cup, or washer, is taken off.

22. Harthan's Metallic Packing.—A new form of metallic packing, called **Harthan's metallic packing**, after its inventor, Mr. F. E. Harthan, is shown in Fig. 22. While this

packing differs slightly in construction from those just described, its principle of operation is the same, and for purposes of comparison, corresponding parts of the three forms of packing are marked with the same letters. The spring *g* in this packing

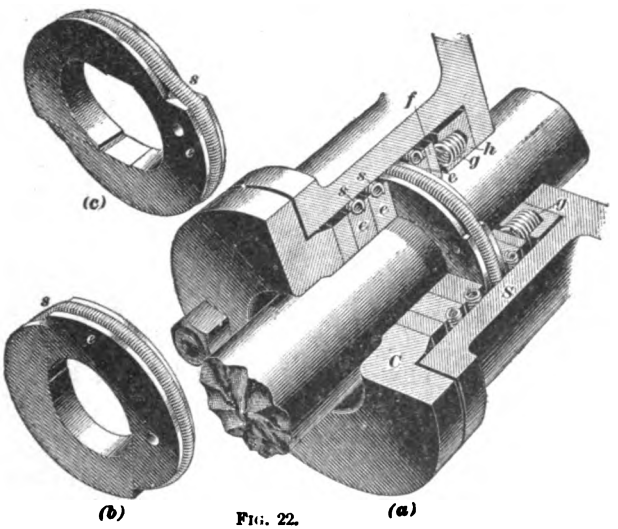

FIG. 22.

consists of a number of small spiral springs set in holes drilled in the back bushing ring *h*. The packing rings *e*, *e* consist of rings made of gun metal or bronze, and divided as shown in views (*b*) and (*c*). They are held together by means of a small spiral spring *s*, which thus allows the packing to be renewed without taking the rod down. The four rings *e* are placed so as to "break joint," thus preventing leakage of steam through them.

CROSSHEAD AND GUIDES.

FUNCTION OF CROSSHEAD AND GUIDES.

23. Referring to Fig. 13, it will be seen that when the engine is running forwards, the action of the main rod tends to bend the end of the piston rod upwards—*pushing* it upwards on the outward stroke, and *pulling* it upwards on the return stroke. On the other hand, when running backwards, the

tendency is to bend the piston rod downwards during both strokes of the piston. It is to prevent this bending of the piston rod, and to compel it to move in its true course, that an engine is provided with crosshead and guides. The crosshead pin, or wristpin, also forms a flexible connection between the piston rod and the main rod.

TYPES OF CROSSHEADS AND GUIDES.

24. Several types of crossheads in general use are illustrated in Figs. 23, 24, and 25, in which corresponding parts are

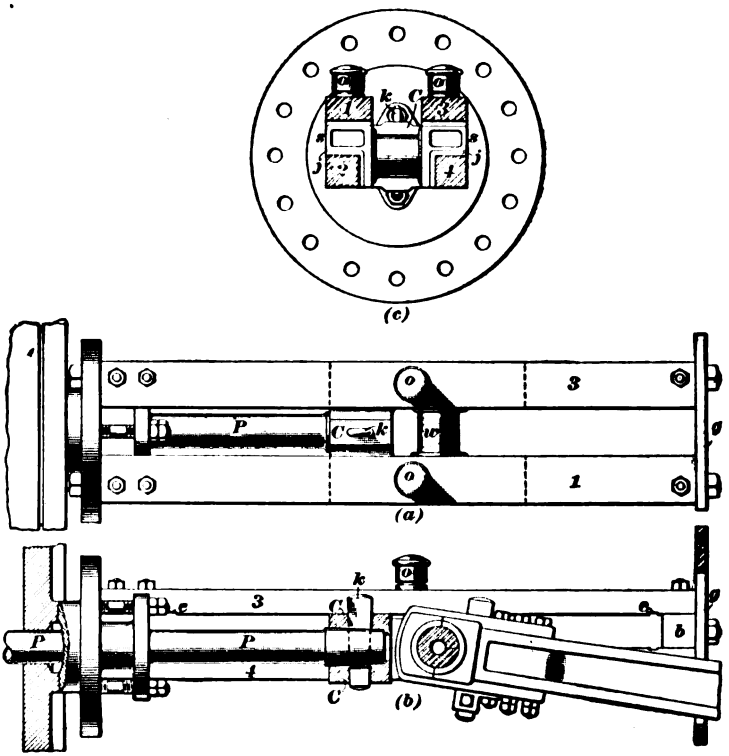

FIG. 23.

designated by the same letters. Fig. 23 illustrates a type sometimes spoken of as the locomotive crosshead; view (*a*) is a

plan; view (*b*) is a side elevation with the guides *1*, *2*, and the near half of crosshead removed so as to show the main-rod connection; while view (*c*) is a section of the crosshead as seen from the back end.

The crosshead *C* is made either of iron or steel. In the type shown in Fig. 23, in which four guides *1*, *2*, *3*, *4* are employed, *C* is sometimes cast solid with the wings *s* and wristpin *w*, and is then preferably made of cast steel; or it may be made up in parts, as in the present case, the cross-

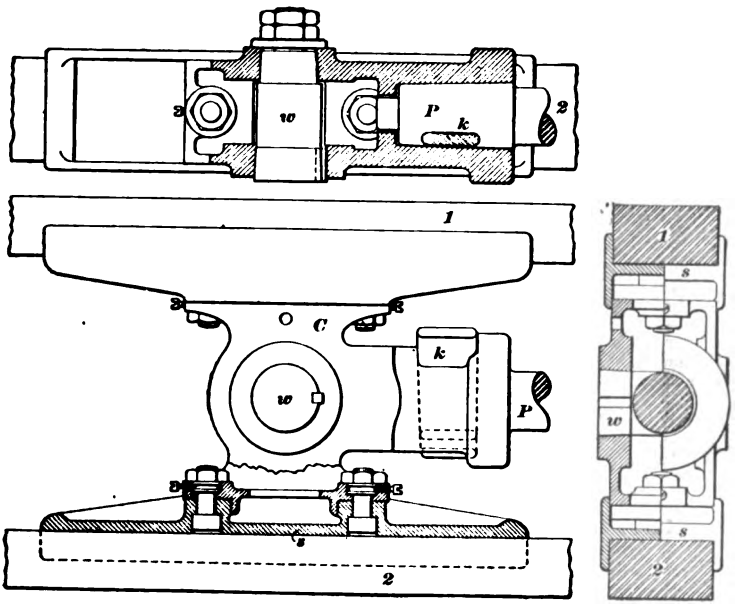

FIG. 24.

head body being of wrought iron or steel, the wings of cast iron, and the wristpin of wrought iron or steel. The wristpin here is made of steel. It is turned up to diameters, one small one to fit the crosshead on one side, the wristpin diameter, and a larger diameter for the other side of the crosshead; the pin is then pressed into place. The brass strips *j* are called **gibs**. The piston rod *P* is secured in

the crosshead by the key *k*, while the main rod is coupled up to the wristpin as shown.

The front ends of the guides are attached to the back cylinder head, while the back ends are secured to the guide yoke *g*,

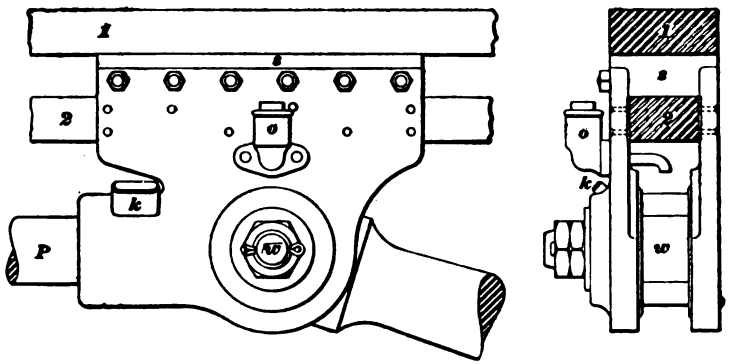

FIG. 25.

which is bolted to the engine frame. The guides are set parallel to the center line of the cylinder, both horizontally and vertically, so that the crosshead may move in a straight line coincident with axis of cylinder and thus avoid bending the piston rod. Guide blocks *b* are fitted between the guides at each end, the whole being bolted together, as shown. These keep the guides a certain distance apart, and, as the latter wear, the blocks are reduced so as to compensate for the wear.

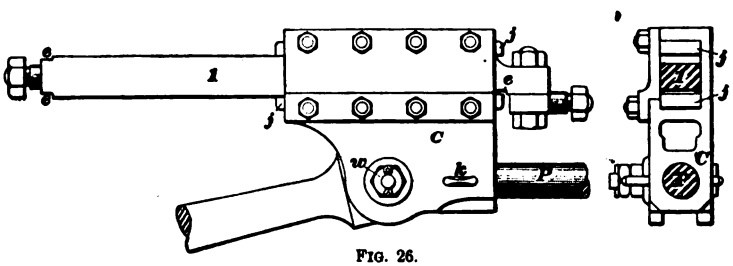

FIG. 26.

Or if liners are put in at the beginning, one or more may be removed to bring the guides together, or, if one liner only is used, it may be either reduced in thickness or else replaced by a thinner one. A small groove *e* is cut across the wearing

faces of the guides at each end in such a position that the crosshead will overtravel slightly, thus preventing the formation of shoulders. The oil cups are marked *o*.

The crosshead illustrated in Fig. 24 has only two guides, one above and one below the crosshead. That shown in Fig. 25 has two guides also, but in this type both guides are above the wristpin. The illustrations show the construction of the crosshead clearly, so that no further description is necessary. A form of crosshead having but one guide is illustrated in Fig. 26. This type, however, is not used as much as the other types.

CONNECTING-RODS.

FUNCTION OF THE CONNECTING-ROD.

25. The **connecting-rods** of a locomotive consist of the main rods and the side rods, the latter often being called *parallel rods*, or *coupling rods*. The main rods connect the crossheads with the crankpins of one pair of the driving wheels, these particular crankpins being called the main crankpins, or, simply, the main pins. The duty of the main rods is to transmit the thrust of the pistons to the crankpins, thus causing the driving wheels to revolve. By the use of side rods, two or more pairs of driving wheels can be used, and the adhesion of the locomotive increased accordingly. The duty of the side rods is to couple the drivers together in such a way that the force transmitted by the main rods will be divided among them.

The main rods on the American type of eight-wheeled engine are connected to the journal of the main crankpins next to the wheels, while the side rods are connected outside of the main rods. This arrangement permits of smaller main crankpins being used, since the force applied to the pin by the main rod has less tendency to bend it. On some engines—for instance, the mogul or consolidated—the front drivers are so far forward that the main rods cannot be connected to them. In all such

cases the side rods must be connected to the journal of the main crankpins next to the wheels, the main rods being connected to the outside journal.

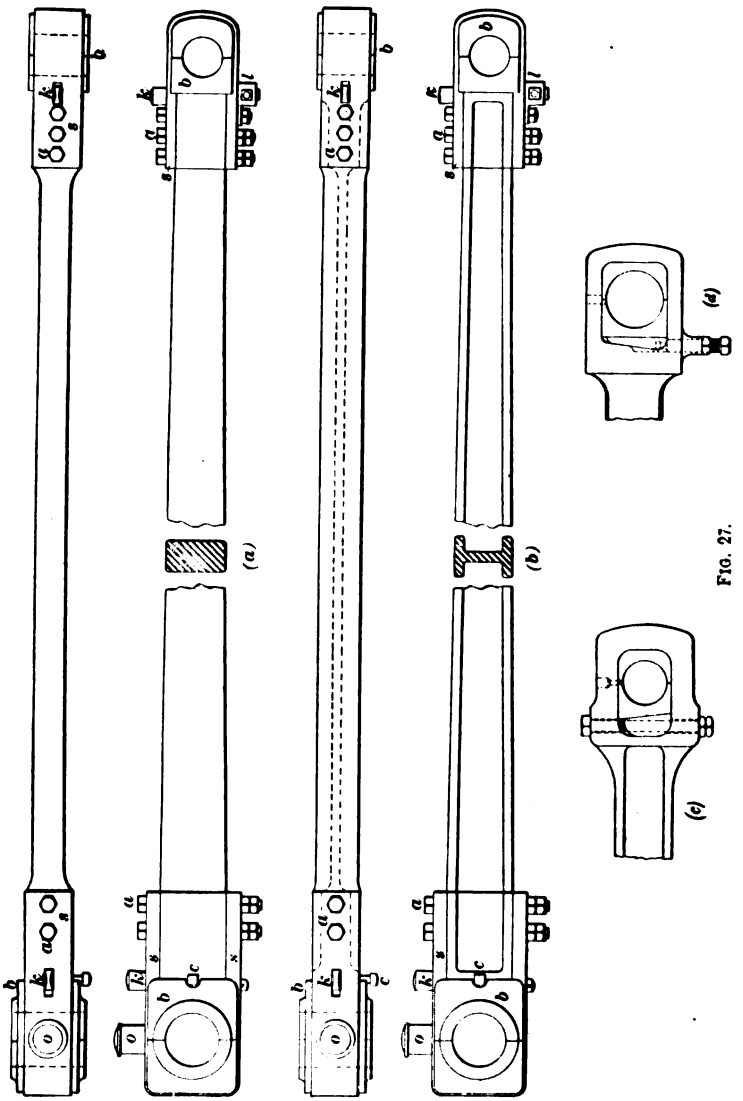

FIG. 27.

MAIN RODS.

26. Two forms of **main rods** are shown in Fig. 27. The first rod, view (*a*), is a solid bar of rectangular section, while the second, view (*b*), is fluted or grooved out until it has a section similar to the letter **I**. The former style has been used quite extensively, but the tendency now is to use the latter type.

The ends of the rod are enlarged to form stub ends, the back end being made the larger of the two, on account of the main pin being of a greater diameter than the wristpin. The ends are each provided with bearings *b*, *b* (called brasses) that embrace the pins and are in halves, to provide a means of taking up the wear. These brasses are held in position by the straps *s*, *s*, which are fastened to the rod itself by the bolts *a*, *a*. The bolts are turned to a driving fit, tapered slightly, and are secured in position by locknuts. The brasses are adjusted by means of the keys *k*, the key in the back end being held in place by the setscrew *c*, while that in the front end passes through a guard *l*, being secured in position by a setscrew as shown. The rods are provided with oil cups *o*, by means of which the lubricant is supplied to the journals. Liners (not seen in the figure) made of steel or wrought iron are inserted between the keys and the brasses, the object of which is to prevent the keys from cutting the softer metal of the brasses. The back-end brasses of the main rod are usually babbitted in recesses provided for that purpose.

SIDE RODS.

27. **Side rods** are usually made in the form of plain rectangular bars (either wrought iron or steel) and provided with stub ends, as shown in Fig. 28 (*a*). The most modern practice, however, is to make them of steel, with an **I** cross-section, and provide them with solid ends, instead of the customary stub ends, as shown in Fig. 28 (*b*). The play, resulting from the wear on the brasses in the strap-end type rod, can be taken up by means of the key *k*, while in the solid-end type no provision is made for taking up wear. The brasses in the latter

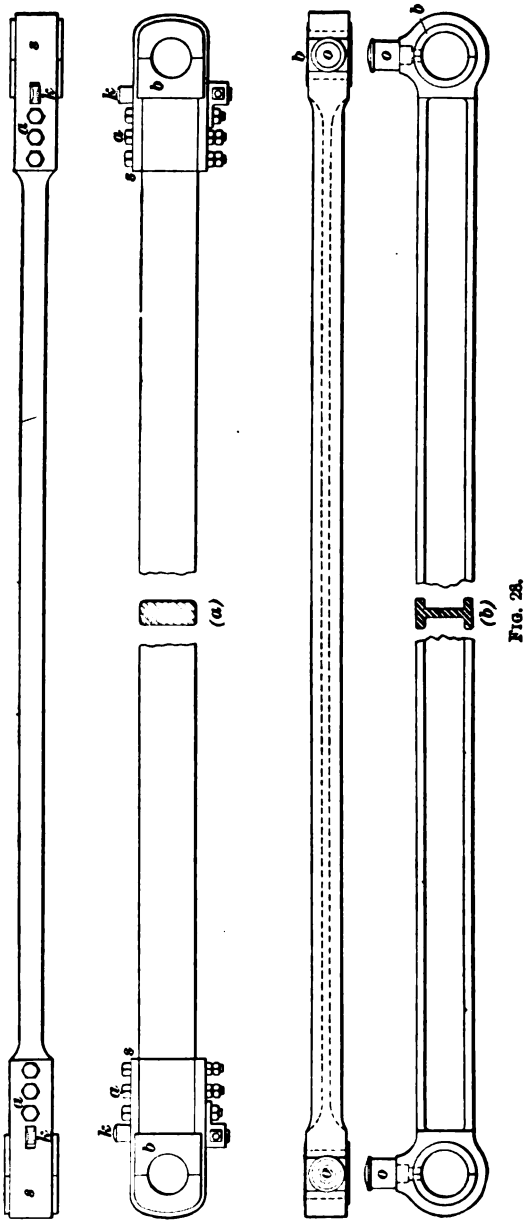

FIG. 28.

type are made in one piece, turned to the required diameter, and forced into position under considerable pressure; when they become worn they must be replaced by new ones.

Sometimes the side-rod brasses are babbitted, and sometimes, especially when made of phosphor bronze, they are not, although the better practice is to babbitt them, as they are then less liable to heat.

KEYING UP RODS.

28. Main Rods.—Before attempting to **key up** the front end of a main rod, move the engine until the main rod on that side is on the bottom quarter, since, in case the wristpin is worn, the key will press the brasses against the largest diameter of the pin in this position. Key up the brasses snugly against the pin, but do not key too tight. Also, be sure the setscrew or other device for holding the key in position is set firmly before leaving the front end of the rod, as otherwise trouble may result. To key up the back end of the main rod, place the engine on that side on the dead center, and key up the brasses; the engine may then be turned until the main pin is slightly forward of the top quarter, to determine whether the rod has been keyed up too tightly. With the main pin just forward of the quarter, the brasses will press against what is sometimes the largest diameter of the pin (should it be worn out of true), and they should work sufficiently free in this position to avoid heating the pin. The brasses should never be so tight that they cannot be moved lengthwise on the pin freely by hand.

29. Side Rods.—Before keying up the **side rods,** the engine should be placed on a straight piece of track and the wedges properly set up; the engine should then be placed on the dead center on the side that is to be keyed up. Key the main-pin brasses first, then the back-end brasses, and the front-end brasses last; do not key up too snugly, as it is far better to have side-rod brasses too loose than too tight. After keying up, try the rods at each pin to see if they are perfectly free on the pin, then place the engine on the other dead center,

and try the rods again to see if they are still free on the pins. Tighten all set screws or jam nuts, as the case may be, so that the keys will be held in position. Proceed in the same manner with the rods on the opposite side of the engine. The pins should be closely watched the first trip after keying up an engine, and the rod cups should feed freely to guard against hot pins.

THE VALVE GEAR.

FUNCTIONS OF THE VALVE GEAR.

30. By the **valve gear** of a locomotive is meant the mechanism that moves and regulates the motion of the steam valves, and, since there are two valves, there must be two sets of valve mechanisms, one for each valve. In order that a locomotive may meet the requirements of railway service, its valve gear must be so arranged that the locomotive can run backwards or forwards with equal facility, and it must provide a means of quickly reversing the direction of rotation of the driving wheels when necessary. Also, the mechanism of the valve gear must be such that the cut-off can be readily varied by the engineer; that is, the engineer must be able, by means of the valve gear, to admit steam into the cylinders for only a small part of the stroke, or for nearly the whole length of the stroke, as circumstances may require. One of the most common forms of valve gear employed to perform these functions is that known as the **link motion,** and the form of link motion in most general use on locomotives is known as **Stephenson's** link motion.

ASSEMBLY OF PARTS.

31. A view of the right-hand valve gear of a locomotive, as it would appear under the engine when looking at it from the left side, is shown in Fig. 29. Since the valve gear on the left-hand side of the locomotive is an exact duplicate of the right-hand gear, with the exception that they are pairs (i. e., are made rights and lefts), a description of the latter will suffice.

In the figure, *A* represents the driving axle, to which the eccentrics *1* and *2* are secured; *3* and *4* are the eccentric straps; *5* and *6*, the eccentric rods, or blades, as they are sometimes called; *7*, the link; *8* and *9*, the upper and lower rocker-arms; *10*, the valve rod, which is connected to the upper arm; *11*, the link hanger, by means of which the link *7* is connected to the "horizontal" arm *12* of the reverse shaft *13* (sometimes called the *tumbling* shaft); *14*, the "vertical" arm of the reverse shaft; *15*, the reach rod, the latter being connected to the reverse lever *16*, which is situated in the cab of the engine; *17*, the reverse quadrant; and *18*, a counter-balance spring. The dotted circle *P* shows the position of the main pin.

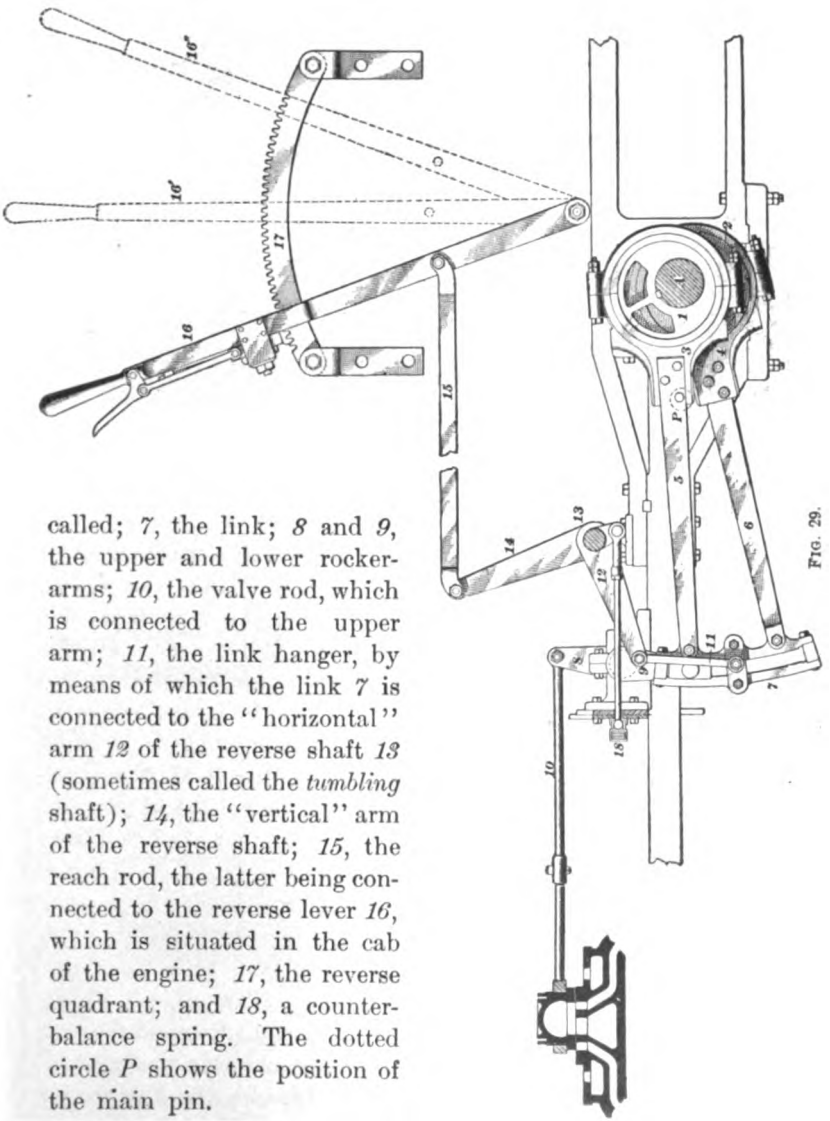

FIG. 29.

ECCENTRIC AND STRAP.

THE ECCENTRIC.

32. Function of the Eccentric.—It was shown in Art. **57,** Part 1, that if a crank were placed on the shaft of an engine, and a valve rod made to connect the crank with the slide valve, the valve would be given its proper to-and-fro motion, and the engine thus be made self-acting. Of course, a crank could very readily be placed on the *end* of the shaft (as in Fig. 5, Part 1), but if required to be in between the bearings, it would have to be made like *K* in that figure, and this, in view of the small motion required of the valve and of the relatively large diameter of shaft, is impracticable.

The **eccentric** is a device employed to take the place of a crank in such a case as that just mentioned. The action of an eccentric is precisely the same as that of a crank; in fact, the eccentric may be said to be a peculiar form of crank, in which the crankpin is made large enough to embrace the shaft, to which it is attached. This statement will be more readily understood by referring to Fig. 30. Views (*a*) and (*b*) represent a crank in which the shaft has been contracted at the crankpin to form a pin that is smaller in diameter than the shaft. Views (*c*) and (*d*) represent a crank in which the crankpin is much larger. than the shaft. In both cranks, however, the center *C* of the crankpin revolves in the circle *Cccc* around the center *s* of the shaft when the latter is caused to rotate. Also, when the crankpin is large, as in views (*c*) and (*d*), the action of the crank will be the same whether the shaft is offset, as shown in (*c*) and by the dotted lines in (*e*), or made straight and secured to the crankpin, as in views (*e*) and (*f*), since in either case the center *C* of the crankpin will revolve in the circle *Cccc* around the center *s* of the shaft. From the foregoing it will be seen that the eccentric *E*, view (*g*), is nothing more nor less than an enlarged crankpin made separate from the shaft and fastened in place by some suitable means, and that its action is exactly the same as that of a crank, since its

center C revolves around the center s of the shaft, as shown by the circle $Cccc$, view (h).

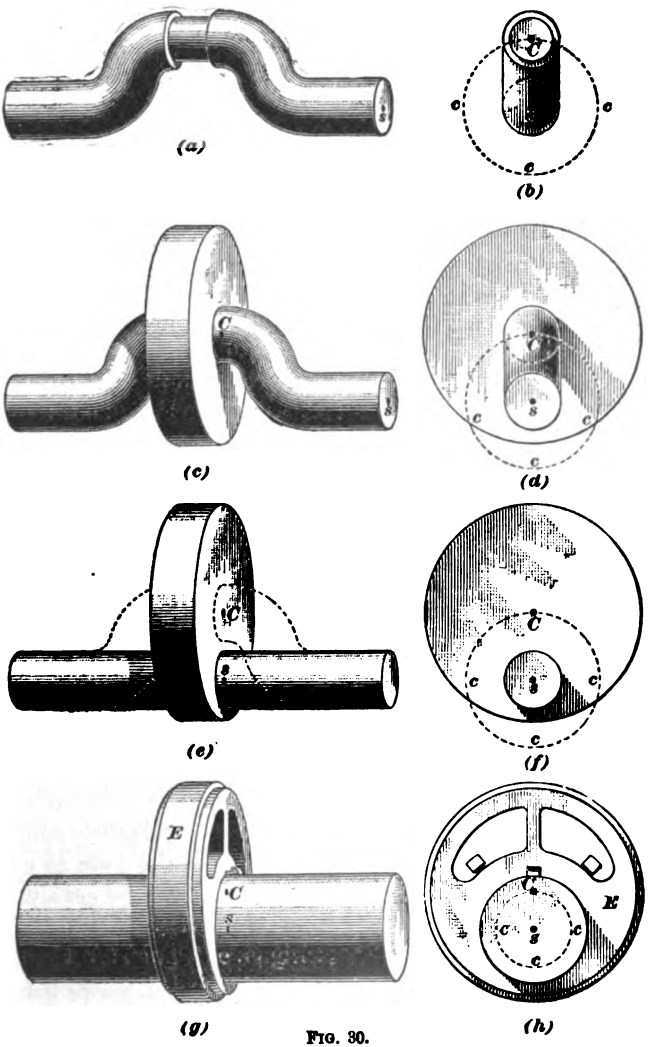

FIG. 30.

33. Construction of Eccentric.—A standard form of eccentric is shown, with strap removed, in Fig. 31, in which (a)

is a side view, and (*b*) a plan. Usually, eccentrics are made of cast iron, although cast steel is now being used to some extent in their manufacture, steel being used in order that a lighter eccentric may be made without impairing its strength. Eccentrics are sometimes made in one piece, or solid, although they are generally made in two pieces, to allow of their being readily attached to, or removed from, the axle in repairing.

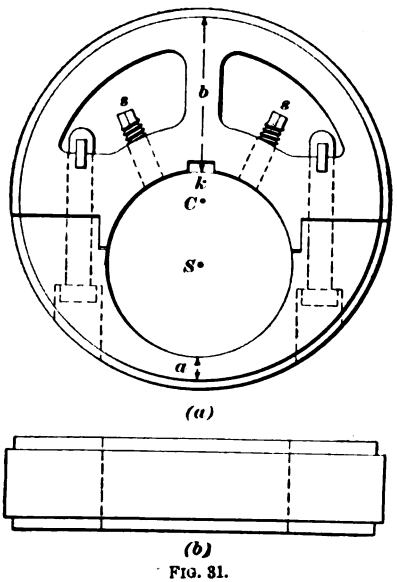

FIG. 31.

When made in two pieces, the parts are held solidly together by means of studs and nuts, or studs with split cotters. Eccentrics are fastened to the axle in various ways; in rare instances, simply by setscrews; in others, as in the figure, by a key *k* and setscrews *s*, *s*; and in others, by saddle keys (having teeth on their under side) held in place by means of setscrews, the saddle key being used to avoid cutting a keyway in the axle. The second method is the one now most generally used, however, as the key prevents the eccentric turning on the axle, and the setscrews prevent motion lengthwise of the axle.

The distance between the center *C* of the eccentric and the center *S* of the hole bored in it to receive the axle is called the **eccentricity** of the eccentric; in other words, considering the eccentric as a form of crank, the distance between the centers *C* and *S* may be considered as the length of its crank-arm. The **throw** of the eccentric is twice the distance between *C* and *S* (just as the throw of a crank is twice the length of its crank-arm), and is in this case equal to the diameter of the circle *C c c c*, Fig. 30. When an eccentric is on a driving axle, its throw may be determined by measuring the least distance *a*,

Fig. 31, and the greatest distance *b*, between the axle and the edge of the eccentric, and subtracting the distance *a* from the distance *b*. The eccentricity, of course, will be just half this difference.

ECCENTRIC STRAP.

34. The **eccentric strap** is used as a suitable means of connecting the eccentric with the eccentric rod, so as to

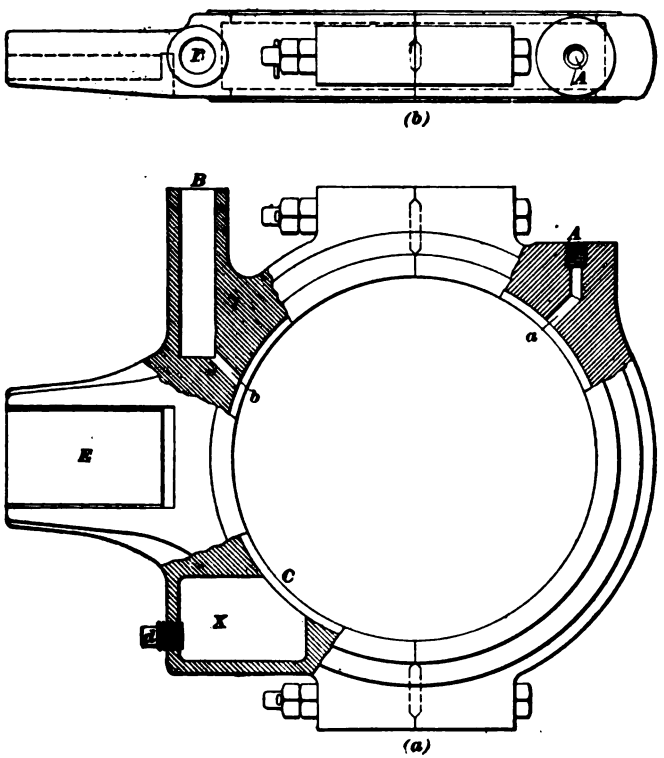

FIG. 32.

transmit the motion of the former to the latter. Its duties are the same as those of the straps on the main rods or side rods of an engine.

A modern type of strap is shown in Fig. 32, (*a*) being a side view and (*b*) a plan view. Eccentric straps are made

in two parts, of cast iron or steel, and are bolted together, as shown. The eccentric rod is securely bolted to the strap at *E*. Provision is made for an oil cup at *A*, the strap being broken away at that point to show the oil passage *a* through it. At *B*, a hole about 1½ inches in diameter is drilled in the strap, as shown, and another smaller hole *b* is drilled from the inside face of the strap to meet it. The larger hole is filled with waste saturated with oil, and serves as another oiling device. The metal of the strap is broken away at *C*, also, to show the chamber *X*, intended as a sort of oil cellar. Oily waste is introduced into the chamber by removing the plug *d*.

THE LINK.

FUNCTIONS OF THE LINK.

35. The link is a simple piece of mechanism, but yet is a very important part of the valve gear of a locomotive; in fact, nothing has yet been devised that will, on the whole, perform the required duties more satisfactorily than the link. The duties of the link are twofold: *first*, it provides a means of readily reversing the engine, since by means of it the rocker can be quickly thrown under the control of one or other of the eccentrics; *second*, it provides a means whereby the admission of steam to the cylinders can be readily cut off* at different parts of the stroke.

CONSTRUCTION OF THE LINK.

36. Links are sometimes forged solid, in one piece, although usually they are of the built-up type similar to that shown in Fig. 33, in which (*a*) is a side view; (*b*), a front view; (*c*), a horizontal section through the middle of the link, the

* In locomotives, steam is not admitted to the cylinders during the full length of the stroke, but is admitted during a part of the stroke only, the supply being cut off at some point of the stroke by the slide valve closing the steam port. Steam, therefore, is said to be "cut off" when the steam port is closed by the valve, and the point of cut-off is the point of the stroke at which the port is closed.

upper half being removed; and (*d*), a view of the forward end *f* of the eccentric rod, showing how it is forked to span the link, to which it is attached by the bolts *a* or *b*. The faces of the

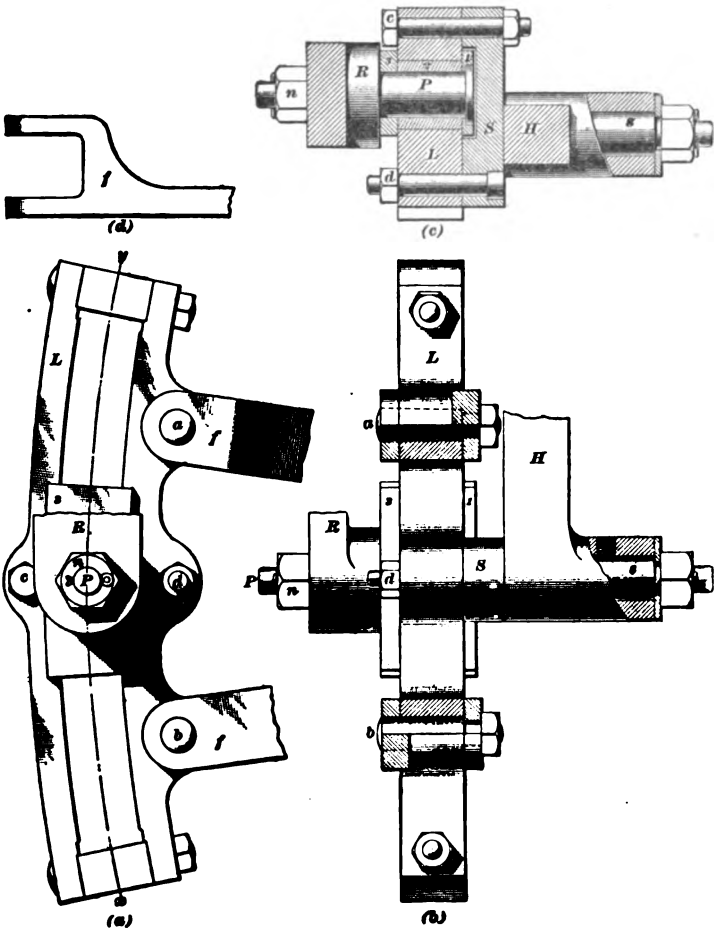

FIG. 33.

two parts of the link *L* are shaped so as to make a curved slot in which slides the **link block**. This block (made up of parts *1*, *2*, and *3*) is attached to the lower rocker-arm *R*

(marked *9*, Fig. 29) by means of the pin bolt *P* and the nut *n*, the link block being free to turn on the pin. The curved line *x y*, drawn through the center of the slot, is called the **link arc**. This link arc is part of a circle, and the **radius of the link** is equal to the radius of this circle. The radius of the link is generally taken equal to the distance between the centers of the link-block pin and the eccentric when the engine is in full gear, in which position the link-block pin is directly opposite the end of the eccentric rod.

The link is curved for the purpose of making the valve move equal distances on both sides of its center position, regardless of the position of the link. The length of the link is taken as the distance between the centers of the link-block pin when the block is in its two extreme positions in the link. A cross-piece *S*, called the **link saddle**, spans the inside face of the link, and is fastened to it by the bolts *c*, *d*. A pin *s*, called the **saddle pin**, is made solid with the link saddle, and is turned up to a free fit for the link hanger *H*, by which the link is carried.

THE ROCKER.

37. The slide valves of a locomotive are usually placed on the top of the cylinders, while the eccentrics are placed below the boiler between the frames, so that it is impossible to obtain a straight connection between the eccentric rods and the valve stem. The connection is therefore made by means of a **rocker**, Fig. 34, having two arms called *rocker-arms*, attached to a short shaft called a *rocker-shaft*. In the figure, *8* is the upper, and *9* the lower, rocker-arm; *S* is the rocker-shaft, and *B* the rocker-box. The rocker as a whole is held in position by the rocker-box, but the rocker-shaft is free to turn in the box. The valve stem is connected, by means of the valve rod, to the upper rocker-arm at *V*, while the end *R* of the lower arm connects with the link block; hence, any movement given to the end *R* of the lower arm by the eccentrics will be transmitted to *V* of the upper arm, but the direction of motion will be reversed. For instance, while the eccentrics are causing the

end *R* to move from right to left, the end *V* is moving the slide valve from left to right; whereas, if the valve were connected directly to the eccentrics, the valve would be moved from right to left also. However, by placing the eccentrics in their proper

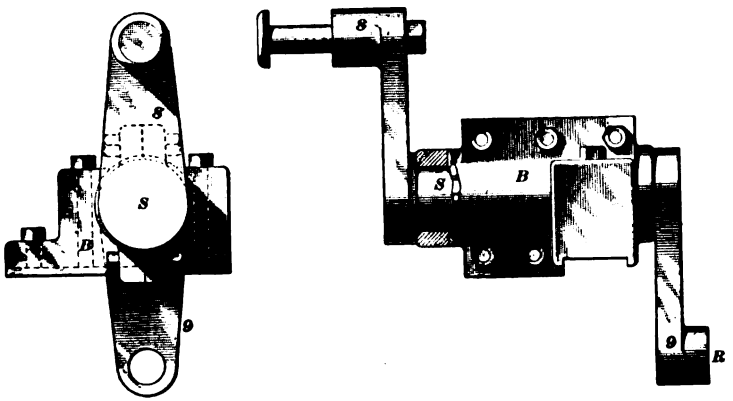

FIG. 34.

positions on the axle (in relation to the crankpin), this reversal of motion can be compensated for, and the valve will receive the required motion for admitting steam to, and exhausting it from, the cylinder at the right time.

THE TUMBLING SHAFT.

38. In order that a locomotive may be reversed, it is necessary that means be provided for raising and lowering the links. This is accomplished by means of a shaft, called a **tumbling shaft,** actuated by the reverse lever situated in the cab. The tumbling shaft is illustrated in Fig. 35, in which the horizontal arms (often called the lifting arms) of the shaft are marked *12*, and the shaft itself *13*. It will be observed that there are two horizontal arms, each arm being connected by a link hanger to the link on its side of the engine. The vertical arm *14* (often called the reversing arm) is connected, by means of the reach rod *15*, to the reverse lever; hence, by moving the reverse lever in the proper direction, the engineer can either

raise or lower the horizontal arms *12*, and thus raise or lower the links to which they are attached. A counterbalance spring *18* is attached to the shaft, the purpose of which is to counterbalance the weight of the links, hangers, etc., and thus make the engine easier to reverse, the object being, in fact, to cause the reverse lever to move as easily in one direction as in the other.

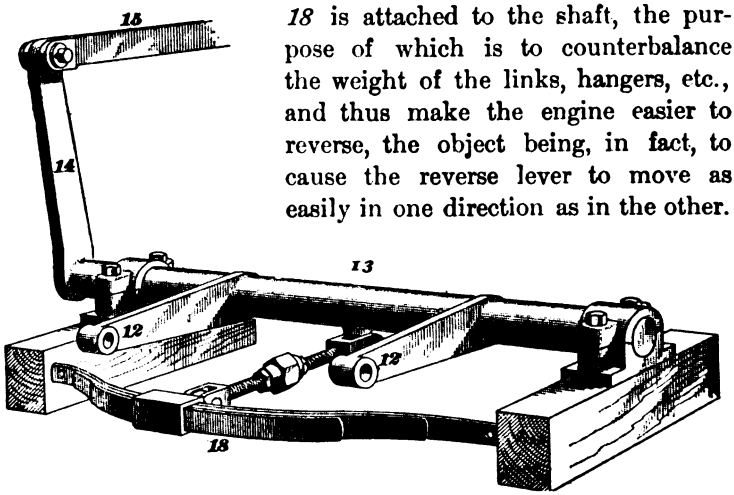

FIG. 35.

Different types of counterbalance springs are used on engines, but whatever their type, their function is the same, namely, to counterbalance the weight of the links and hangers.

OPERATION OF THE VALVE GEAR.

REVERSING THE ENGINE.

39. By referring to Fig. 29, it will be seen that one eccentric rod *5* is connected to the top end, and the other *6* to the bottom end, of the link. The eccentric of the rod marked *5* is so set on the driving axle (relative to the main pin) as to cause the forward movement of the engine; hence, it is called the **forward-motion,** or **go-ahead,** eccentric; the eccentric of the rod marked *6* is so set as cause the backward movement, and, consequently, is called the **backward-motion,** or **back-up,** eccentric. The link block being connected to the lower rocker-arm *9*, remains stationary with respect to the rocker, but the link can either be raised or lowered from its mid-position by

means of the tumbling shaft operated by the reverse lever. When the reverse lever is moved to the forward corner (as far forward on the quadrant *17* as possible), the tumbling shaft is moved so as to lower the link to the position shown in Fig. 29, in which position the link block is directly opposite the end of the go-ahead eccentric rod *5* and receives its motion direct from that rod, consequently it moves with the rod. The movement thus given to the rocker causes the slide valve to admit steam to, and exhaust steam from, the cylinder in such a manner as to make the engine move forwards. When the reverse lever is placed in the back corner (the position shown by the dotted lines *16''*, Fig. 29), the link is raised until the end of the back-up eccentric rod is directly opposite the link block. The rocker then receives its motion direct from the back-up eccentric, so that the slide valve is caused to reverse its motion and admit steam to, and exhaust it from, the cylinder in such a manner as to make the engine move backwards.

When the reverse lever is in the forward corner and the link block is in a position opposite the end of the go-ahead eccentric rod, as in Fig. 29, the engine is said to be in **full gear forward**; when the reverse lever is in the back corner and the link block is opposite the end of the back-up eccentric rod, the engine is said to be in **full gear backward.** When the reverse lever is moved to the middle position (marked *16'*, Fig. 29), the link is raised until the link block is at the middle point of the link and midway between the ends of the go-ahead and back-up eccentric rods. In this position the engine is said to be in **mid-gear.** If the link block is half way between mid-gear and full gear, the engine is said to be in half gear forward or backward, depending on whether the block is above or below mid-position.

CHANGING THE POINT OF CUT-OFF.

40. The point of the stroke at which steam is cut off from the cylinders (called the point of cut-off) is a very important point, since the economy with which the engine uses its steam depends, to a great extent, on that point. The cylinders of a locomotive are made sufficiently large to fully utilize the

adhesive power that is exerted between the driving wheels and the rails, in order that the full adhesive power of the locomotive may be used in starting heavy trains and at other times when necessary. On account of this, when the engine is working at less than full load, the cylinders would be too large for the work they are to do, were it not for the provision that is

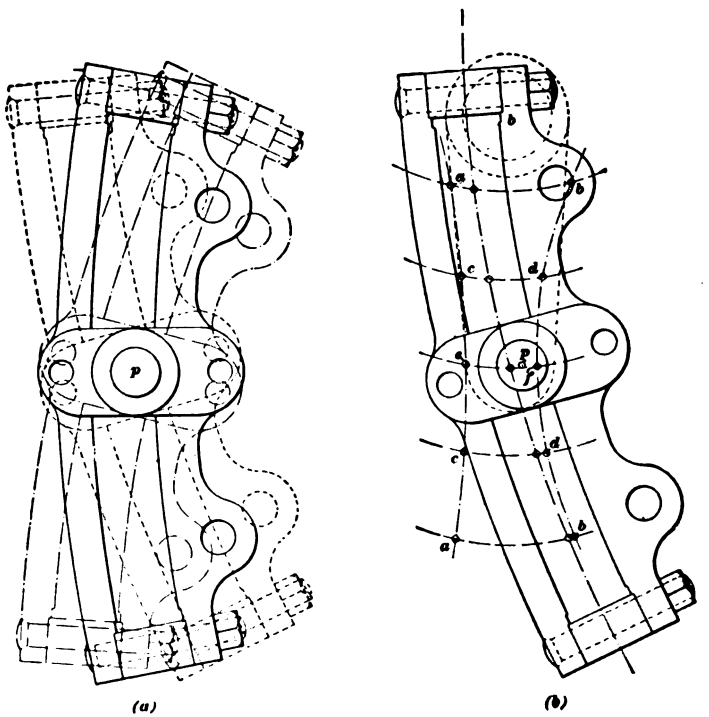

FIG. 86.

made for varying the point at which steam can be cut off from the cylinders.

The point of cut-off can be altered by changing the travel of the valves;* the travel of the valve can be altered by means of the reverse lever, moving the link either from full gear toward

*The travel of the valve is the total distance the valve moves in either direction of its strokes, that is, it is the total distance traveled by the valve from the time the valve changes its direction of motion to make the forward stroke until it changes its direction on the return stroke,

mid-gear or from mid-gear toward full gear; hence, moving the links either toward full gear or toward mid-gear alters the point of cut-off.

The motion that the link derives from the eccentrics is somewhat complex. Being suspended by the link hanger *11*, Fig. 29, the link is made to oscillate about the saddle pin *p*, as shown in view (*a*), Fig. 36, while at the same time it also swings like a pendulum on the link hanger, this latter movement making the link-block pin move in the arc of a circle a short distance on either side of its center position, as indicated in view (*b*), Fig. 36. Now, if the valve gear were to be placed in mid-gear, the link-block pin, and hence the end of the lower rocker-arm, would travel back and forth a distance equal to that between the points *e* and *f*, view (*b*), and the slide valve would be moved back and forth on its seat a corresponding distance. If the valve gear were to be placed in full gear (either forwards or backwards), the link-block pin and, hence, the end of the lower rocker-arm, would travel back and forth a distance equal to that between the points *a* and *b*, which, neglecting the slip of the link block in the link, is equal to the throw of the eccentric, and the slide valve would be moved on its seat a corresponding distance. If the valve gear were to be placed in half gear (either forwards or backwards), the link-block pin and the end of the lower rocker-arm would move back and forth a distance equal to that between the points *c* and *d*, and the valve would have a corresponding travel on its seat. It will thus be seen that: when the engine is in mid-gear the valve will have the least travel; the valve travel will be increased by moving the reverse lever toward either corner, or decreased by moving it toward mid-gear; and the travel of the valve is greatest when the engine is in full gear; hence, moving the reverse lever toward the corner increases the cut-off, while moving it toward the center of the quadrant (hooking her up), decreases the cut-off. It will be observed, also, that with the link block in any position in the link above mid-position, the engine will move forwards; while with the link block below mid-position, the engine will run backwards.

SLIDE VALVES.

THE ORDINARY D VALVE.

GENERAL DESCRIPTION.

41. Construction.—A section of a D slide valve is shown in Fig. 37 in its central position, that is, in such a position that the center line of the valve coincides with the center line of the exhaust port *c* in its seat. A similar valve is illustrated in Fig. 4, Part 1, and its action is clearly explained. However, if the two valves just mentioned be compared it will be observed that they differ somewhat in construction. It will be observed that the flanges *1* and *1* of the slide valve illustrated in Fig. 4, Part 1, are of the same width as the steam ports *a* and *b* in the valve seat; hence, when the valve is in mid-gear these flanges just cover the ports. Now, referring to the series of diagrams in Art. **58**, Part 1, it will be seen that a valve like that just referred to admits steam to the cylinder for the full length of the stroke; consequently, there is no "cut-off," and, hence, no expansion of the steam. Using steam for the full stroke is a very wasteful practice; it has been found that, among other advantages, a considerable saving in coal can be effected by admitting steam to the cylinders for a part of the stroke only, and then cutting off the supply, allowing the steam in the cylinder to expand during the remainder of the stroke. When this latter practice is followed the steam is said to be used **expansively.**

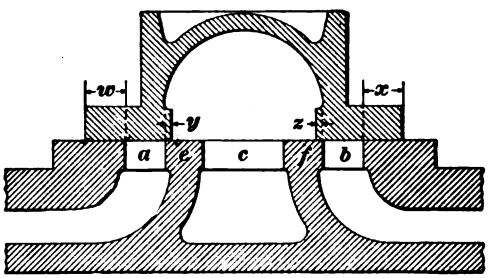

FIG. 37.

As is well known, steam is used expansively in locomotive service, but in order to do so the slide valve used must be made

of different proportions (relative to the arrangement of the ports) from that shown in Fig. 4, Part 1. A locomotive slide valve is shown in Fig. 37; it will be seen that the flanges are made considerably wider than the width of the ports *a* and *b*, instead of being of the same width as in the valve just referred to. The inside edges have only been slightly extended, so that the valve overlaps the bridges but a small amount; the outside edges of the flanges, on the other hand, have been extended until the flanges overlap the ports considerably.

42. Lap and Clearance.—The amount *y* or *z* that the valve, when in mid-position, overlaps the bridges *e* and *f* is called the **inside lap** of the valve; the amount *w* or *x* that the valve overlaps on the outside is either called the **outside lap,** the **steam lap,** or simply the **lap.** The object of giving a valve outside lap is to enable the engine to work steam expansively. After cut-off occurs, the steam in the cylinder is allowed to expand until the valve travels a distance equal to the sum of the inside and outside lap, whereupon the valve connects the steam port with the exhaust port, and release occurs. Inside lap, it will be seen, delays the exhaust of steam and increases the compression; hence, high-speed engines usually have no inside lap, as it would create too great a back pressure on the piston.

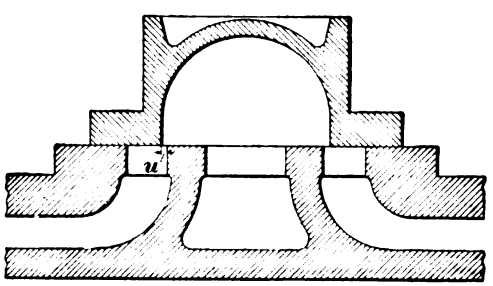

FIG. 38.

The slide valve shown in Fig. 4, Part 1 has neither inside nor outside lap; that shown in Fig. 37 has both inside and outside lap. The valves on some engines have outside lap, but no inside lap—the inner edge of the valve in that case being flush with the inner edge of the steam port, as in Fig. 4, Part 1. On other engines, the inner edge of the valve is cut away so that there is a space between the edge of the valve and the edge of

the port when the valve is in mid-position, as shown in Fig. 38. This space, marked *u*, is called the **inside clearance,** or simply the **clearance** of the valve. The effect of clearance is the reverse of that produced by inside lap; in other words, it makes the release occur earlier, and compression later, in the stroke.

EVENTS OF THE STROKE.

43. The Events Defined.—The action of a slide valve without inside or outside lap was illustrated in Fig. 6, Part 1, by a series of skeleton diagrams. A valve of this kind is in mid-position* when the engine is on the dead center, and *O b*, which represents the valve crank or eccentric crank-arm, is therefore placed at right angles to, or "square" with, the main crank *O a* (see diagram *A*). If, however, lap is added to the valve, the relative position of the eccentric crank-arm and the main crank has to be changed, resulting in a different relative motion of valve and piston. Lap also causes the steam port to be closed before the piston reaches the end of its stroke, and it brings about certain other events at different points of the valve stroke, these events being designated by the terms *admission*, *cut-off*, *release*, and *compression*.

Admission, the point of the stroke at which steam is admitted to the cylinder, takes place at about the instant the piston commences its stroke (sometimes sooner, sometimes later), and it occurs when the outside edge of the valve is at the outside edge of the steam port, and is moving to open the port.

Cut-off, the point at which the admission of steam to the cylinder is stopped, takes place when the valve arrives at the same position as above, but is moving to close the port. When at either admission or cut-off, the valve is displaced from its mid-position a distance equal to the lap of the valve; hence, when the travel of the valve from the mid-position is equal to the lap, the engine is either at admission or at cut-off.

---

*Actually, it is not quite in mid-position, due to the angularity of the eccentric rod.

Release, the point at which steam begins to exhaust from the cylinders, occurs when the inside edge of the valve is at the inside edge of the exhaust port, and the valve is opening to exhaust.

Compression, the point at which the exhausting of the steam is stopped, occurs when the valve arrives at the position just mentioned, but is moving to close the port. At either release or compression, the valve is displaced a distance from mid-position equal to the inside lap of the valve; hence, when the displacement of the valve is equal to the inside lap, the engine is either at release or compression.

Besides these four principal events, there are two other events of interest—the points at which the exhaust port and steam port are open their full amount.

In order to better explain the effects of lap on the operation of an engine, a series of skeleton diagrams of a slide-valve engine having lap will be given, showing the relative positions of the piston, valve, etc. at the instant the events take place during a stroke of the engine. In these diagrams, as in those of Fig. 6, Part 1, the main crank-arm and the eccentric crank-arm have purposely been made longer than they should be, in order that the diagrams may be clearer.

44. Admission, Front End.—The diagram shown in Fig. 39 represents the engine on the dead center, and just

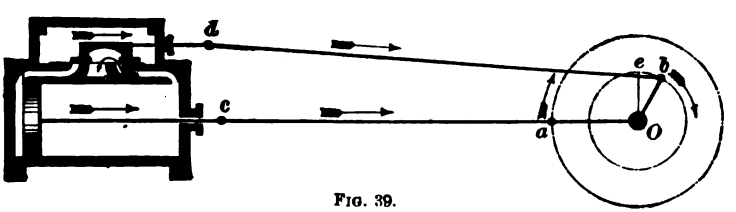

FIG. 39.

on the point of beginning the outward stroke. The piston is at the front end of the cylinder, and is about to move in the direction indicated by the arrow. The slide valve, it will be seen, is not in its mid-position, but is a distance beyond it equal to the lap, its front edge being at the edge of the front steam port. In this position, the valve is just on the point of

opening the port for admission of steam to the front end of the cylinder; hence, the diagram illustrates the point of admission. When lap is employed, it is seen that the valve must have moved forward a distance equal to the lap by the time the piston reaches the end of stroke, since, otherwise, steam would not be admitted into the cylinders until some time after the piston had begun its stroke, and a considerable loss of power would result.

Since the valve has been moved forwards from its mid-position, the eccentric arm Ob must be moved forwards a corresponding distance from its right-angle position Oe also, or to the position shown in the figure. The angle eOb through which the eccentric crank-arm has been advanced is called the **angle of advance.**

45. Steam Port Wide Open to Exhaust.—If the engine is moved off the dead center, steam will enter the front end of the cylinder and start the engine moving, as indicated by the arrows. Fig. 40 shows the position of the piston and slide valve when the engine has moved around sufficiently to cause

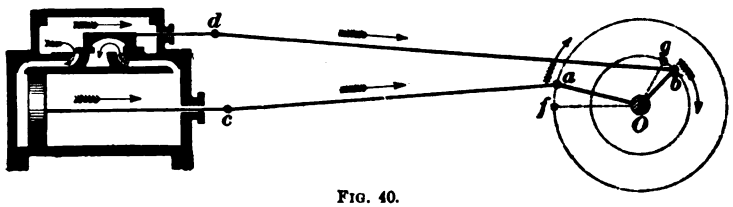

FIG. 40.

the slide valve to open the steam port full to the exhaust. To thus open the port wide, the crankpin a has had to move through the distance fa, and the eccentric center b through the distance gb. In this position of the valve, steam is still entering the front end of the cylinder and forcing the piston along, while the exhaust steam in the back end of the cylinder is exhausting to the atmosphere, as indicated by the arrow. The piston and slide valve are still moving in the same direction. Fig. 39 shows that the steam port is nearly wide open to the exhaust at the beginning of the stroke, while Fig. 40 shows that

it is opened wide very shortly after the beginning of the stroke, so that the opening to the exhaust is greatest when most needed.

46. Steam Port Wide Open for Admission.—Fig. 41 shows the position of the parts when the valve has opened the front steam port the full amount. In moving to this position, the main crank has moved through the distance $f\,a$, and the

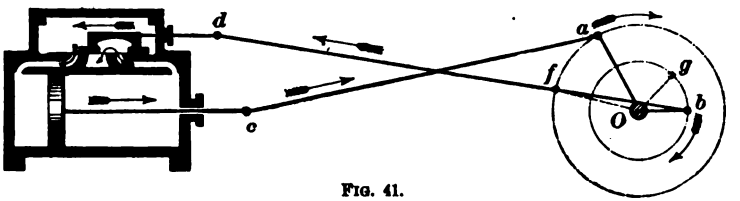

FIG. 41.

eccentric through the distance $g\,b$, $O\,f$ and $O\,g$ being their positions when the back steam port was wide open to the exhaust, Fig. 40. The piston is still moving in the same direction, but the slide valve has reached the end of its stroke and is just on the point of having its motion reversed by the eccentric. Also, it will be noticed that the back end of the cylinder is still wide open to the exhaust.

47. Cut-Off.—Fig. 42 marks the second important point of the stroke, namely, the *cut-off*. The slide valve, it will be seen, has traveled sufficiently on its return stroke to close the steam port for admission; hence, the supply of steam is cut

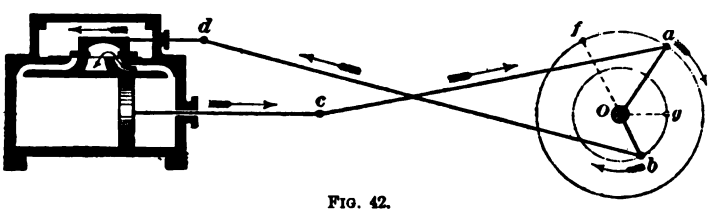

FIG. 42.

off from the cylinder, and during the remainder of the piston's stroke the steam in the cylinder is allowed to expand—at least until the port opens to exhaust. The back end of the cylinder, however, is still open to the exhaust. In moving to this position, the crank and eccentric have moved through the distances $f\,a$ and $g\,b$, respectively.

48. Compression.—Fig. 43 marks the third important event that occurs during a stroke. In this position the inside edge of the valve just closes the back steam port to exhaust, and for the remainder of the stroke the exhaust steam that is trapped in the back end of cylinder is compressed by the piston. This point of the stroke is called the *point of compression*. It will be observed that both steam ports are now

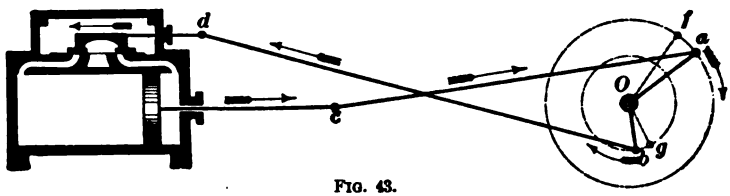

FIG. 43.

covered by the valve; also that the piston is nearing the end of the outward stroke. The crank and eccentric have moved through the distances fa and gb.

49. Release.—Still another important event of the stroke is indicated in Fig. 44. In order to reach this position, the crank and eccentric have had to move through the distances indicated (fa and gb), bringing the front inside edge of the valve in line with the inside edge of the front steam port. A slight movement of the valve to the left will open the front port so that the steam in the front end of the cylinder will

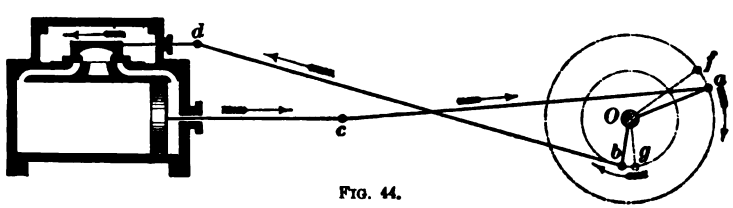

FIG. 44.

pass to the exhaust. This point of the stroke is therefore called the *release*. The effective pressure of the steam against the face of the piston is supposed to cease as soon as release occurs, but, owing to the fact that the steam in the cylinder cannot escape to the atmosphere instantly, there is a slight but

decreasing pressure exerted on the piston during the remainder of the stroke.

50. Admission, Back End.—In Fig. 45 the piston has reached the end of its outward stroke, and is about to begin the return stroke. The back outside edge of the valve is in line with the outside edge of the back steam port; hence, any movement of the valve to the front (i. e., to the left in the figure) will admit steam to the back end of the cylinder, and

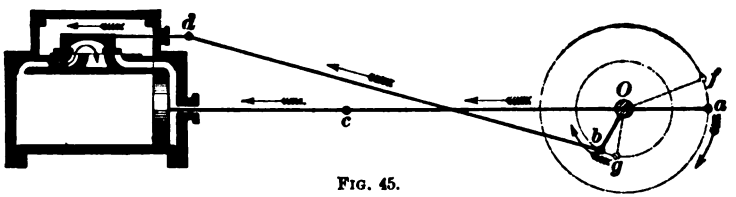

FIG. 45.

thus force the piston towards the front end. The front port is nearly wide open to the exhaust, so that the steam in that end of the cylinder is still passing out to the atmosphere. The crank and eccentric have moved through the distances fa and gb, which brings them diametrically opposite the positions they occupied in Fig. 39.

51. The Other Events of the Return Stroke.—During the return stroke the events take place in the same order as on the outward stroke; that is, when the piston has moved along sufficiently to cause the slide valve to finish its stroke to the front and return on its back stroke to the position shown in Fig. 45, cut-off will take place. As the piston moves still farther to the front, the front inside edge of valve will again be in line with the inside edge of the front steam port; hence, this port will be closed to the exhaust and compression will occur. As the piston proceeds on its stroke, the back inside edge of the valve comes in line with the inner edge of the back steam port, and release takes place. When the valve moves backwards (i. e., to the right) far enough for the front outside edge of the valve to come in line with the outside edge of the front port, admission occurs at the front end.

EFFECTS OF CHANGING THE LAP.

52. Outside Lap.—Changing the amount of outside lap on a valve produces changes in the distribution of the steam that can best be understood after a careful study of the diagrams. For example, it is evident that if the outside lap in Fig. 42 had been less than it is, the valve would not close the front port when its eccentric was in the position shown; consequently, the piston would have to move farther back before the valve would be moved far enough ahead to close the port. This would make the cut-off occur later in the stroke, and thus lessen the period of expansion. On the other hand, it will be seen that if the valve had more lap, it would overlap the port when the eccentric was in the position shown; this would cause the valve to cut off earlier in the stroke, and the period of expansion would be longer. Thus, it will be seen that increasing the outside lap brings about an earlier cut-off and increases the expansion, while decreasing the outside lap makes the cut-off later and lessens the expansion.

53. Inside Lap.—Changing the inside lap affects the compression and release. From Fig. 43 it will be evident that if the inside lap had been made less, the back steam port would not have been closed so soon to the exhaust; consequently, the compression would have begun later in the stroke. Had the inside lap been made greater, the valve would have closed this port sooner; hence, compression would have begun earlier in the stroke. From Fig. 44 it will be seen that reducing the inside lap causes the valve to release the steam earlier in the stroke; whereas, by increasing the inside lap the valve will not uncover the port until it has moved a greater distance on its stroke, and hence release will take place later. It will be seen from the above that increasing the inside lap causes the compression to begin earlier and the release to take place later in the stroke. On the other hand, reducing the inside lap causes the compression to begin later and the release to take place earlier in the stroke.

LEAD.

54. Lead Defined.—Thus far in treating of the slide-valve engine, the movement of the slide valve relative to the piston has always been such that, with the engine on a dead center and the piston about to reverse its motion, the valve is on the point of opening the steam port to admission, as in Fig. 39. On some locomotives, however, the valve so moves relatively

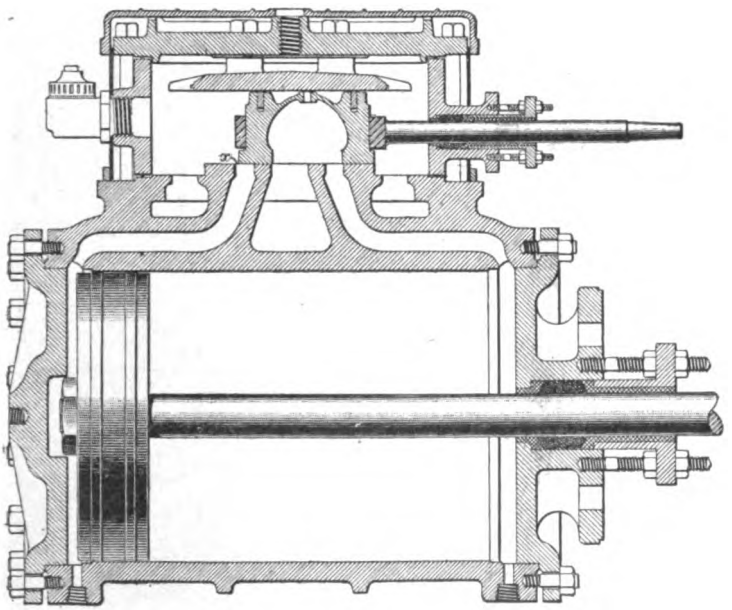

FIG. 46.

to the piston that the steam port is open a small amount by the time the piston is at the end of its stroke; that is, instead of the valve being just at the edge of the port, as shown in Fig. 39, it has moved from $\frac{1}{32}$ to $\frac{1}{16}$ inch farther from its mid-position, thus opening the steam port that amount. (These amounts are for full gear; the lead increases as the engine is hooked up.)

When the steam port is open a small amount at the beginning of the stroke, the valve is said to have lead, such a

case being shown in Fig. 46, where it will be noticed the piston is at the beginning of its stroke, and about to move to the rear, while the slide valve has moved beyond its mid-position so as to open the port a distance x. The distance x is called the **lead** of the valve. Since the valve has had to be moved a little towards the back end, in order to give it lead, it is evident that the eccentric must be moved in the same direction on the axle (supposing there were no rocker); that is, to give a valve lead, the angle of advance must be increased.

55. Effects of Lap and Lead on the Position of the Eccentrics.—By referring to the diagrams in Fig. 6, Part 1, it will be seen that when the slide valve has neither lap nor lead, the eccentric will make an angle of 90° with the crank. From Fig. 39, it will be seen that if the valve has lap, the angle that the eccentric makes with the crank will be greater than 90°, while if the valve has both lap and lead, the angle must be made

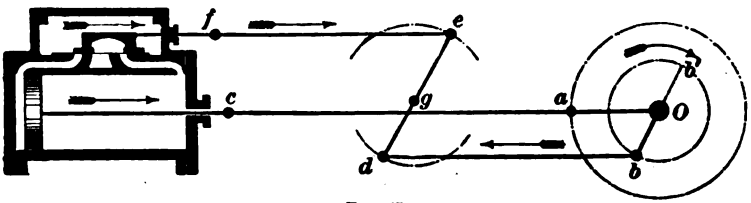

FIG. 47.

still greater. By referring to Fig. 39, it will be seen (by following the direction of the arrows) that the crankpin a is following the eccentric pin b; hence, when (as in Fig. 39) a rocker is not used, the eccentric must be set 90° plus the angle of advance ahead of the crank, in order to give the slide valve the proper relative motion. When a rocker similar to that in Fig. 47 is used, the valve rod fe and eccentric rod db move in opposite directions. Consequently, to give the valve the proper motion, the eccentric, instead of being placed 90° plus the angle of advance ahead of the crank (at Ob', Fig. 47), must be placed 90° minus the angle of advance behind the crank, namely at Ob, Fig. 47. In other words, the eccentric must be moved around on the axle until it is in a position diametrically opposite the position it would occupy were the rocker not used. As the rotation of

the driving wheels of a locomotive when running forwards is the opposite of that indicated by the arrow in Fig. 47, the go-ahead eccentric, in being placed 90° minus the angle of advance

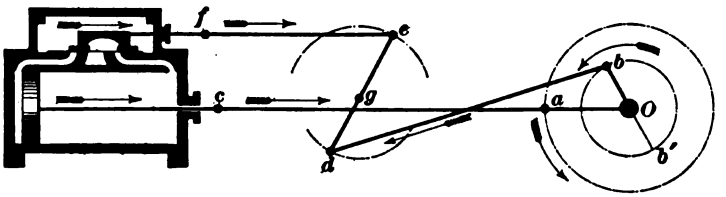

FIG. 48.

behind the crank, will occupy the position Ob in Fig. 48; if there were no rocker, it would be at Ob'. The back-up eccentric will be placed 90° minus the angle of advance ahead of the crank.

56. Relative Position of Eccentrics and Main Pin. It is very important that the position of the eccentrics

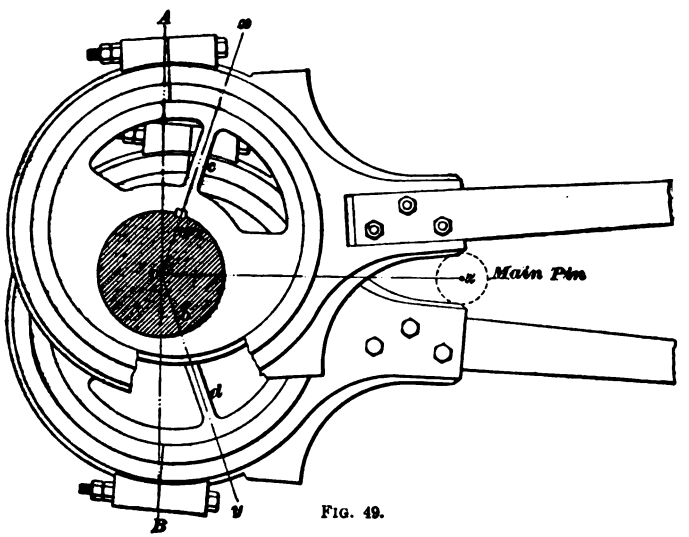

FIG. 49.

relative to the main pin be clearly understood, and enginemen should inspect the eccentrics on their engines with a view of fixing this position in their minds. Knowing

their exact position, it will be a simple matter, should an eccentric slip, to determine which one is out, and in what direction.

The relative position of the left-side eccentrics to the main pin, as viewed from under the engine, is shown in Fig. 49. In the figure, the strap of the go-ahead eccentric is broken away so as to show the web *d* of the back-up eccentric more clearly. The center of the driving axle is at *o*, while *a* and *b* are the centers of the go-ahead and back-up eccentrics, respectively. It will be noticed that these centers are on the lines *o x* and *o y*— the center lines of the webs *c* and *d*. Also, that the angles of advance *x o A* and *y o B* of the eccentrics are equal, and are measured on the side towards the main pin; in other words, the angle *z o a* between the crank-arm *o z* and eccentric arm *o a* is 90° minus the angle of advance. The angular advance will vary with the lap, the lead, and the throw of the eccentrics, so that it is likely to be different in any two given engines; it is practically the same, however, for the four eccentrics of any one engine, thus causing the center lines *o x*, *o y*, etc. of the eccentric webs to incline equally towards the main pin. As the eccentrics are securely fastened to the axle, and the axle to the wheel, the relative position of the eccentrics to the main pin will remain the same whatever the position of the main pin.

THE ALLEN VALVE.

ITS CONSTRUCTION AND OPERATION.

57. It is very desirable that steam be admitted to the cylinders fast enough to maintain the pressure as near that in the boiler as possible during the whole period of admission, and anything that prevents this reduces the power of the engine correspondingly. With the ordinary form of slide valve, it is especially difficult to maintain the pressure when the cut-off is short, as is the case when running at high speeds. This is due to the fact that the travel of the valve must be reduced to shorten the cut-off, and, as a consequence, the valve opens the port such a small distance that steam cannot flow into the

cylinder with sufficient rapidity to maintain the pressure nearly constant during the whole period of admission. To overcome this difficulty, the **Allen** valve, so called after its inventor, was designed.

In general design, the Allen valve, Fig. 50, is very similar to the ordinary **D** slide valve, with the exception that it has a supplementary passage *a a*, which passes over the exhaust cavity and ends in two ports *b*, *b* in the valve face. The valve is shown in mid-position in view (*a*). It has an outside lap equal to *l*, but no inside lap, having, instead, a small amount of clearance, as shown. In view (*b*) the valve is shown just as admission is about to take place. It will be noticed that the left outside edge of the valve is directly above the edge of the port *A*, while the right-hand outside edge of the supplementary port is flush with the edge *c*. Therefore, any movement of the valve to the right will cause steam to be admitted into port *A*, both past the left edge of the valve and also through the supplementary port *a a*, as in view (*c*), thus making a double opening for the admission of steam. As the valve proceeds on its stroke, the left port *b* in the valve is closed by the left bridge *e*, view (*a*), but by the time this occurs the left steam port is opened far enough to admit steam as fast as it is required, and the supplementary port is not needed.

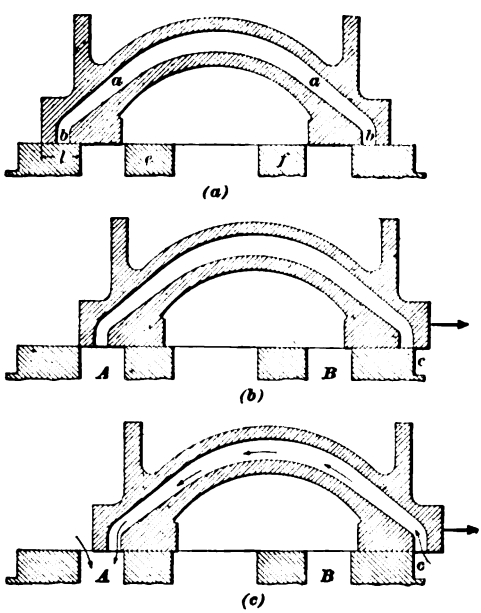

FIG. 50.

The advantage obtained by the use of this type of valve is greatest when the travel of the valve and consequent cut-off is short, since it then gives twice as much opening for the admission of steam as the ordinary valve does. Also, it opens the steam port at admission and closes it at cut-off at twice the rate of the ordinary valve, which is another very decided advantage.

THE DOUBLE-PORTED VALVE.

58. Fig. 51 represents sections of a slide valve of the Allen type, called by its inventor, Mr. C. J. Mellin, chief engineer of the Richmond locomotive works, the **double-ported** valve, in order to distinguish it from the Allen valve proper. The supplementary port *a a* is in this instance used as an exhaust as well as an admission port, and the valve is used on the low-pressure side of Richmond compound locomotives, in order to get as low a back pressure as possible without the use of large valves, small valves with short travel being more advantageous. The Allen valve doubles the port opening at admission, and also doubles the *rate* at which the port is opened and closed at admission and cut-off. The valve shown in Fig. 51 not

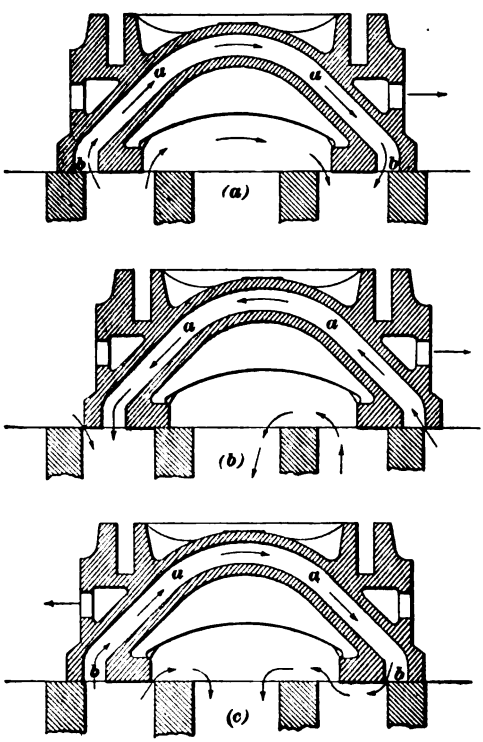

FIG. 51.

only does this, but it also doubles the port opening at release, and opens the exhaust port at twice the rate of speed that the ordinary slide valve will. This is a very decided advantage at high speeds.

In order that anything may be gained by increasing the exhaust-port opening, it must be increased at the very beginning of the exhaust period, so that the pressure of the exhaust steam will drop quickly, and as much as possible, before the piston begins its return stroke. It has been found that after a certain piston velocity has been reached, the back pressure* does not decrease during the return stroke; hence, the pressure of the exhaust steam should be reduced as much as possible before the beginning of the return stroke.

The double-ported valve possesses another advantage under conditions that occur while the engine is drifting. As the piston moves toward the end of its stroke, a vacuum is created behind it, while the air ahead is compressed somewhat. The supplementary port in the valve is made to connect the two steam ports at the same instant that the exhaust port opens, so that the compressed air from one end of the cylinder passes, as indicated by the arrows in view (*a*), to the other end of the cylinder. This not only destroys the vacuum, but it also effects a decrease in the back pressure in the other end of the cylinder; hence, the final compression is much lower than it would otherwise be.

In the figure, view (*a*) shows the valve in mid-position, the arrows indicating a flow of air from one end of the cylinder to the other. View (*b*) shows the valve at admission, the arrows indicating the direction of the flow of steam to and from the two ends of the cylinder. View (*c*) represents the valve in release position, and shows how the port opening for exhaust is increased at the beginning of release by the supplementary port *a*.

*The exhaust steam exerts a pressure on the exhaust face of the piston that acts in opposition to the pressure of the live steam on the other face, and thus tends to stop the movement of the piston. This pressure is termed "back pressure."

BALANCED VALVES.

THE NECESSITY OF BALANCING.

59. Considerable power is lost by using a slide valve that has no provision made for **balancing** the pressure of the steam on it. This will be more readily understood if the force required to move the valve under steam pressure is considered. The resistance that must be overcome in moving the valve is due to the friction exerted between the valve and its seat, and this depends on, and varies directly with, the pressure of the valve on its seat.* By decreasing this pressure, the force necessary to move the valve will be decreased. The pressure of the valve on its seat is equal (neglecting the weight of the valve) to the total pressure of the steam on the back of the valve, less the upward pressure that the steam in the ports exerts on the face of the valve. The total downward pressure may be found by multiplying the pressure† of the steam acting on the valve by the area of the valve. Thus, a valve 11 inches by 20 inches, subjected to 180 pounds steam pressure, would sustain a total pressure of $11 \times 20 \times 180 = 39{,}600$ pounds ($19\frac{3}{4}$ tons) tending to hold it on its seat. However, the steam in the ports exerts a variable pressure upwards on the face of the valve, and this opposes the downward force and lessens the pressure of the valve on its seat. It will be seen, therefore, that it is very difficult to calculate the exact effective pressure of the valve on its seat; but with an $11'' \times 20''$ valve, it probably will average between 14 and 15 tons.

Imagine a weight of 15 tons resting on the valve while it is being moved on its seat. To move it, a force of about 2,200 pounds would be required, and, at the speed the valve must be moved, this represents an expenditure of considerable power, a great deal of which is unnecessarily wasted. Besides wasting

* Of course, the friction also depends on the condition of the valve and its seat, the lubricant used, etc.; but the effect of pressure only will here be considered.

† We refer to the gauge pressure; the fluctuation of the steam pressure in the steam chest is not considered here.

power, an unbalanced valve causes greater wear of the valve, valve seat, eccentrics, links, rockers, etc., and it is much harder to handle by the reverse lever. To balance a valve, the total pressure on the valve is diminished by excluding the steam from a portion of the top of the valve. How this is done will be explained in connection with the *Richardson* and *American balanced valves.*

THE RICHARDSON BALANCED VALVE.

60. The Richardson balanced valve is illustrated in Fig. 52, in which (*a*) is a longitudinal section through the center of the steam chest; (*b*), a section through the center at right angles to the valve stem; (*c*), a view of the top of the valve, to show the arrangement of the grooves for the packing strips *a*, *a* and *b*, *b*; while (*d*) is a view of one of the end packing strips, showing the packing springs *c*, *c*.

It will be observed that very few alterations in valve and steam chest are necessary to balance the valve, the only changes being the addition of a plate *P* called **a balance plate**, and a few slight changes in the slide valve. The balance plate, which in this case is bolted to the steam-chest cover by the bolts *d*, *d*, is often cast solid with the steam-chest cover, that is, the two form one piece. A small space is always left between the top of the valve and the bottom of the plate, in order that excessive pressure in the cylinder, from any cause, may be able to raise the valve a short distance off its seat, to relieve the pressure without injuring the cylinder heads.

The only alterations necessary in the slide valves are the addition of the slots to receive the packing strips, and the small hole *e* drilled through the top of the valve into the exhaust cavity. The packing strips, it will be observed, view (*c*), enclose a rectangular space *C*, from which they exclude the steam. This space is made equal in amount to the area of valve surface that it is desirable to relieve of pressure. The small hole *e* in the top of the valve connects the space *C* with the exhaust port; hence, any steam that may leak past the packing strips will pass to the atmosphere, and thus any accumulation of pressure in the space above the valve is

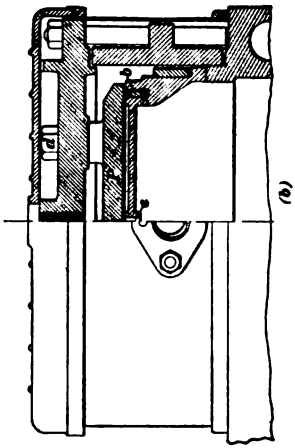

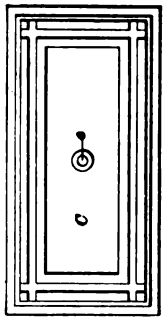

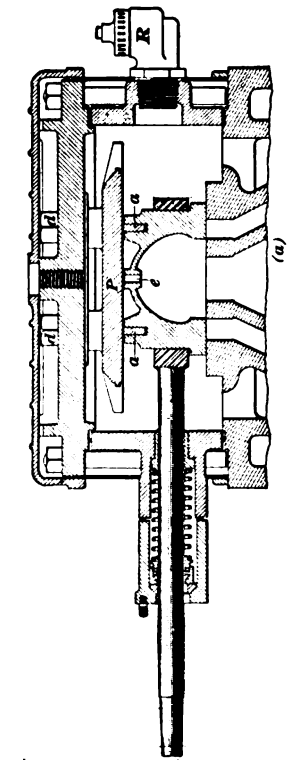

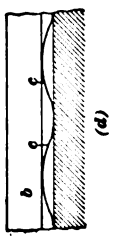

FIG. 52.

prevented. A spring similar to *c*, view (*d*), is placed under each packing strip, to hold it up against the balance plate when steam is shut off. When the steam chest is filled with steam, the steam forces the packing strips against one another; against the inside edges of the slots, which are made perfectly true; and up against the balance plate against which they slide, so that they are held in steam-tight contact by the direct action of the steam. This method of balancing can be used with either the plain **D** valves or the Allen type of valve.

61. The Richardson Relief Valve.—A relief valve *R* is used to prevent a vacuum forming in the steam chest and cylinders when running with steam shut off. A view of the **Richardson relief valve** is shown in Fig. 53, in which part of the casing is broken away to show

the check-valve *v*. The valve is screwed into the front end of the steam chest, so that the chamber below the valve *v* communicates, by means of the passage *x*, with the steam chest. The chamber above the valve communicates with the atmosphere through the openings *a* in the valve case. When the engine is working steam, the valve *v* is held against its seat *b* by the steam pressure beneath it; but when steam is shut off, the valve drops down and allows air to enter the steam chest

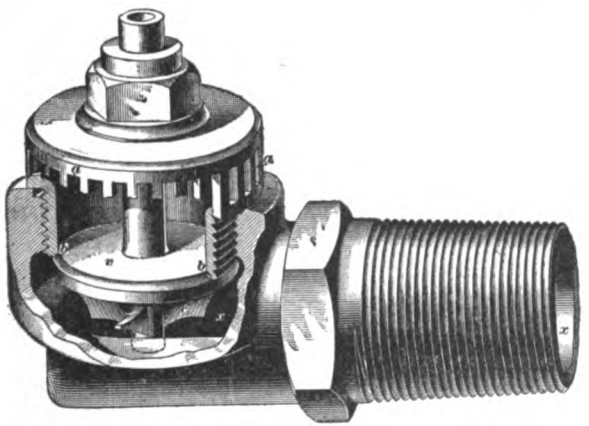

FIG. 53.

through the openings *a*, valve *v*, and passage *x*. The curved wings *c* are so arranged that they turn the valve slightly in closing, thus causing it to seat in a new position each time, keeping the wear uniform, the result being that the valve remains steam-tight for a longer period of time than it otherwise would. Sometimes a combined pressure and vacuum relief valve is used, one of the valves preventing an excessive pressure, and the other preventing a vacuum, from being formed.

THE AMERICAN BALANCED VALVE.

62. Another form of balanced valve, known as the **American balanced valve,** is shown in section in Fig. 54, while the valve disk and packing ring are shown in perspective in Fig. 55. *P* is the balance or bearing plate, against which the

packing ring makes a steam-tight joint as it moves back and forth. The packing ring *a* is depended on to form a steam-tight joint between the valve disk *D* and the balance plate *P*, so as to exclude the pressure from the top of the valve. This

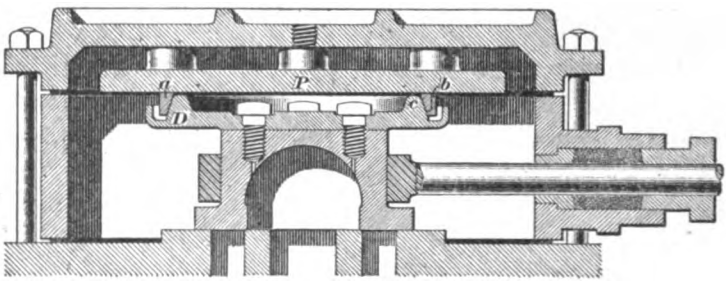

FIG. 54.

ring, which is made circular in form, has its inner face beveled to suit the bevel of the cone *c* on the disk *D*, on which the ring is placed. The ring is cut at one point to make it flexible, and the joint thus made is covered by the *joint plate b* of L section, which makes a steam-tight joint with the balance plate at the top, and with the beveled face of the cone below the ring. The piece *b* is fastened to one end of the ring only, so that the ends of the ring are free to come and go. The ring is turned up slightly smaller in inside diameter than is required when it is in its regular position, so that when it is forced to position in putting on the steam-chest cover, it is expanded slightly by the beveled face of the cone. By expanding the ring, it is put in a state of tension, so that it

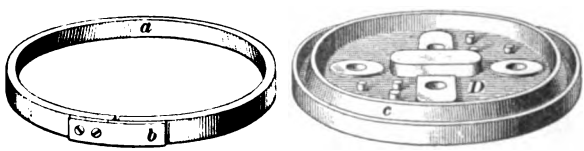

FIG. 55.

tends to squeeze the cone and close up, but owing to the bevels on the ring and cone, this tendency causes the ring to slide up and press against the balance plate. The elasticity of the packing ring, therefore, holds the ring up in position when

steam is shut off. When steam is admitted to the steam chest, it exerts a force on the entire outside face of the ring that tends to close the ring or decrease its diameter. This causes the ring to press even more firmly against both cone and balance plate, which insures a steam-tight joint between the parts.

PISTON VALVES.

63. Construction of Piston Valves.—As will be seen by referring to Fig. 57, the **piston valve** *V* derives its name from its form, being composed of two pistons connected together by a stem. The piston valve differs in form from the

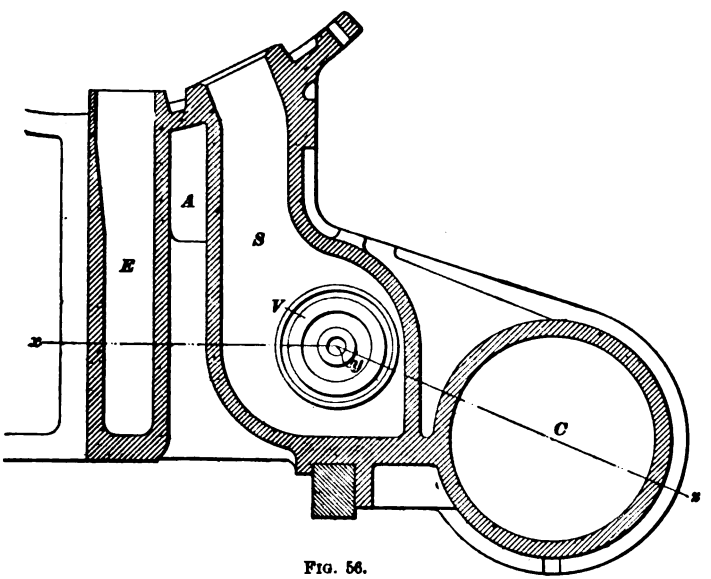

FIG. 56.

types of valves already described; when properly made and fitted in its bushing, it makes a valve that is practically balanced and that is well adapted for certain kinds of work.

Fig. 56 represents a section through the saddle and cylinder of a locomotive fitted with piston valves, in which *V* represents the piston valve; *C*, the cylinder; *E*, the exhaust; and *S*, the steam passages. Now, suppose the saddle and cylinder to be

cut on the lines $x\ y$ and $y\ z$, and the top piece removed; if we were to look down on the bottom piece, we should see a section like that shown in Fig. 57. In Fig. 57, E is the exhaust passage; S, the steam passage; while A is simply a cavity in the casting between the two. It will be observed that when this form of valve is used, the exhaust passage branches and communicates with the ends of the steam chest, while the steam passage communicates with the center—just the reverse of the way they connect when an ordinary form of slide valve is used. It will be observed, also, that the cavity c in the piston valve V is not an exhaust cavity; on the contrary, it is filled with live steam, since it connects directly with the steam passage S. This type of piston valve is known as an "internal admission" valve.

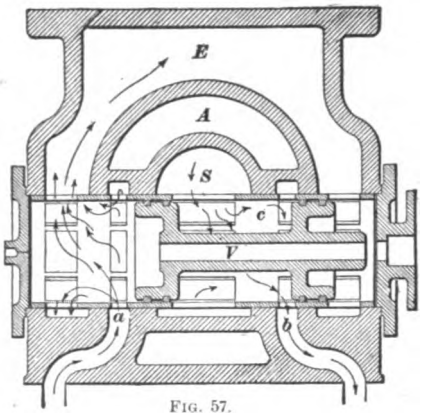

FIG. 57.

64. Operation of Valve.—As presented in Fig. 57, the valve has just completed its backward stroke (i. e., to the right), and is on the point of reversing its motion. Steam, therefore, is flowing into the back end of the cylinder through port b, while the exhaust steam in the front end is flowing out to the exhaust through port a, as indicated by the arrows. When the valve moves to the end of its forward stroke, steam will flow from the cavity c through port a into the left end of the cylinder, while the exhaust steam in the back end will flow from port b into the right leg of the exhaust passage E. A valve is said to be a **direct valve** when it opens the front port for the admission of steam by moving to the rear, and closes it by moving to the front. The piston valve here shown is therefore said to be an **indirect valve**, and it will be seen that the direction of its motion must be the opposite of that of a direct valve;

hence, the eccentric for an indirect valve must be set on the axle directly opposite the position it would have were it operating a direct valve. In other words, when a rocker similar to that shown in Fig. 47 is used in connection with an indirect valve, the eccentric should be set ahead of the crank at an angle equal to 90° plus the angle of advance.

65. Effect of Wide Packing Rings.—The piston valve is always spoken of as a "balanced" valve, and a great many people seem to believe that it is perfectly balanced; but the statement is not strictly true, except when the valve has no packing rings. If the valve *is* fitted with packing rings, then the smaller the rings are, the more nearly the valve will be balanced. When small rings are used, however, it is found that the bridges in the steam ports wear faster than the solid surface of the cylinder, and consequently the rings catch on the edges of the ports and cause trouble. To overcome this defect, rings wide enough to span the port are sometimes used. These rings are of such width as to produce minimum wear on the bridges across the ports, and besides, they cannot drop into the port when the bridges *do* wear, but they are so wide that they cause the valve to be unbalanced to a considerable extent.

At cut-off, when the ring just covers the port, the outside face of the ring is subjected to the pressure in the cylinder, which may be nearly, if not quite, steam-chest pressure. This pressure on the outer face of the ring tends to force the ring to collapse or close up, and thus move away from the port, and if the pressure were not balanced, the ring would collapse and great leakage would occur between the steam chest and cylinder. This pressure on the ring is balanced by permitting steam-chest pressure to get behind the ring, that is, to the space between the ring and the bottom of its groove, as in the ordinary ring piston-packing. The pressure behind the ring therefore remains practically constant, but the pressure on the front face of the ring does not, since the face is practically relieved of pressure as soon as the ring moves past the port. The result is, that while the ring may be nearly balanced when over the port, it is decidedly unbalanced as soon as it moves

beyond the port, when pressure behind forces it against the bushing, thereby greatly increasing the force necessary to move the valve.

66. Improved Packing Ring.—Except for their unbalancing effect, wide packing rings are very desirable for piston valves. In Fig. 58 there is shown an improved form of piston valve with wide packing rings, in which the unbalancing effect

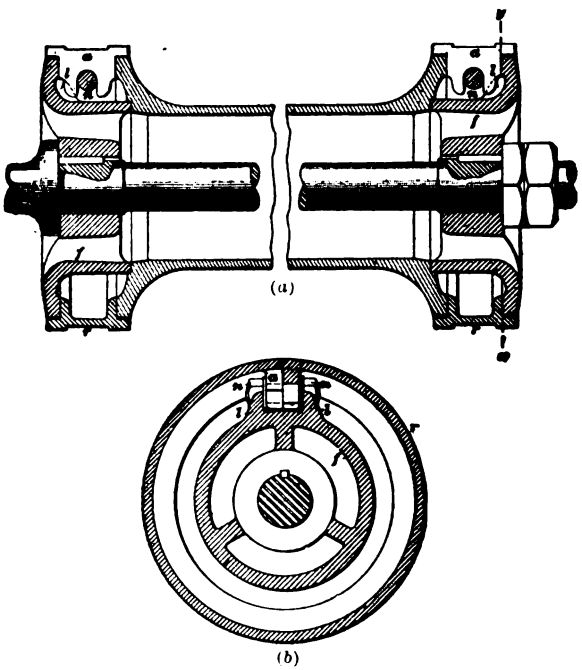

FIG. 58.

of the rings is overcome. View (*a*) is a section taken lengthwise through the middle of the valve, while (*b*) is an end view with the end of the follower *f* cut away on the line *x y* to show the packing ring *r*. The packing ring is shown in section at *r* in view (*a*), and entire in view (*b*), with the exception of that portion cut away by the section *x y*, and part of the lug *a* broken away. This form of ring is made practically solid, but at the same time adjustable, so that it has all the advantages of the

solid ring, while at the same time it can be adjusted to provide for wear. It is prevented from turning by the lugs *l* cast on the follower *f*.

The packing ring is cast solid, with a lug *a* on its inside face. It is first turned up to a slightly larger diameter than its bush, and a cut then made through the lug *a* radial to the circumference, a shim of the required thickness being inserted in the cut. The ring is then clamped together by means of the bolt and nut *n*, and turned up to the proper diameter to fit the valve bush. The shim is used to provide a means of adjusting the ring to the bush, and the insertion of a thicker shim provides a means of compensating for wear. With this construction, the unbalancing effect of wide rings is done away with, since the steam pressure back of the ring can have no effect in increasing the diameter of the ring, and thus cannot set it out against the bushing and increase the friction. In other words, this valve is, in effect, simply an adjustable plug piston valve, and may therefore be as perfectly balanced as the plug valve.

SETTING SLIDE VALVES.

PRECAUTIONS BEFORE SETTING.

67. Locomotive engineers do not, as a rule, set the valves of the locomotives they run, that work being usually performed in the back shop or roundhouse. The progressive engineman, however, realizing the importance of **valve setting**, is anxious to acquire a knowledge of the subject, and rightly so, since the more he knows about the machine under his charge, the better runner will he make. If the parts of the valve gear are not badly worn, it is not a very difficult matter to set the valves of a locomotive, and the success or failure that will attend one's efforts will depend, principally, on the precautions taken before beginning the work, and on the accuracy with which the measurements and alterations are made during the process of setting the valves.

The valves should be set while the engine is hot, the best time for the work being shortly after the engine has completed

her run. Before beginning the work, take up any lost motion that may be in the parts of the valve gear, adjust the wedges, and see that all keys, bolts, and setscrews are tight. A valve setter should understand an exact method for finding the dead center. Also, a method for determining the "port marks" on the valve stems, so that in case the valve stems have not been marked he can mark them, and thus avoid having to remove the steam-chest covers in the future when setting the valves.

FINDING THE DEAD CENTER.

68. Great care must be observed when placing an engine on the **dead center** to see that the exact *dead point* is found; otherwise the valves will not be set as intended. When the main crankpin is near the dead center, any movement of the driving wheels will produce but a very slight movement of the piston, while it will have its greatest effect on the slide valve, which will receive considerable motion; hence, if the engine, by mistake, is placed slightly off the center, the slide valve may be some distance from the position it would occupy were the engine on the exact center.

To place a locomotive on the right forward center, proceed as follows: Turn the main driving wheels forwards until the main crankpin *m* is in the position shown in Fig. 59, and the crosshead within a short distance—say ½ inch—of its extreme forward travel. Now scratch a mark *b* on the guide at the end of the crosshead; also, make a center-punch mark on some stationary part of the locomotive, as at *c* on the wheel cover; scribe the line *x y* on the rim of the wheel by means of a pair of compasses; then place one end of a tram—a stout wire pointed at the ends and bent into the form shown at (*b*)—in the center-punch mark *c*, and scribe a short line *d* on the rim of the driver, making a punch mark where the two lines cross. Next, turn the drivers forwards until the crosshead has finished its stroke and has reached a point on its backward stroke a short distance beyond that in which the end of the crosshead is again directly in line with the scratch *b*. Then turn drivers *back* again until mark *b* is once more reached by crosshead, and with one end of the tram in the center punch *c*, scribe another

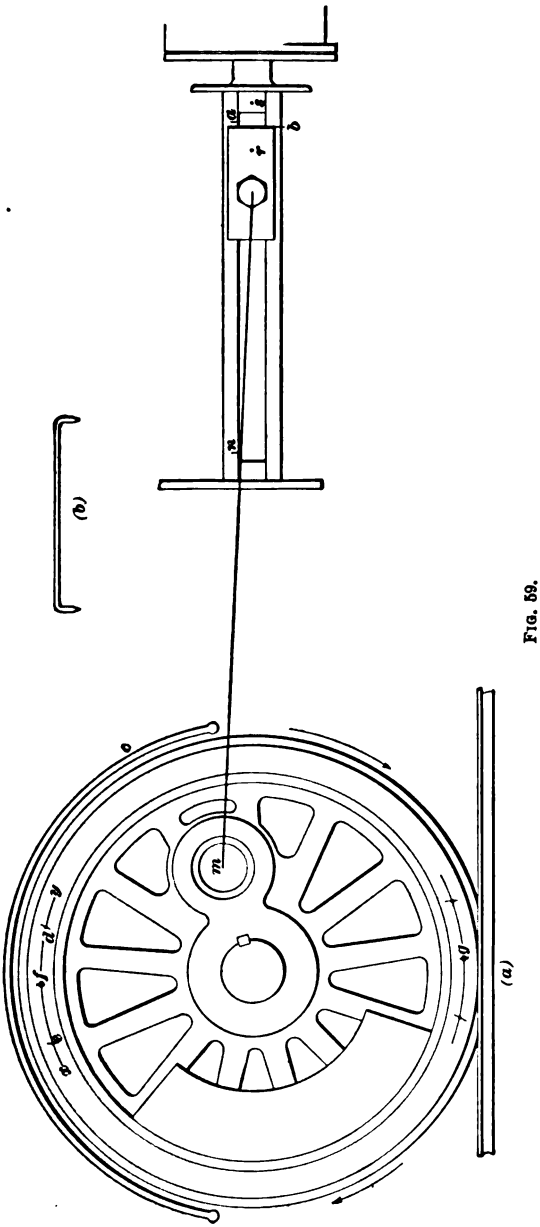

Fig. 59.

arc *e* on the rim of the wheel, and make a punch mark where it crosses the line *xy*. Find a point on the line *xy* midway between the punch marks *d* and *e*, and mark with a punch mark *f*. Then place one end of the tram in the punch mark *f*, and turn the drivers backwards (in direction opposite to that of the arrow) until the other end of the tram just fits into the punch mark *c* on the wheel cover; the right side of the engine will then be on the forward center.

The object of turning the wheels (when crosshead is moving backwards) until the crosshead has passed mark *b*, and then turning them back again, is to take up the lost motion, and have the same brass in contact with the wristpin in each case.

To find the back center, proceed in the same manner, bearing in mind to take up the lost motion in the way just described. The same tram is used for both forward and back center, as is also the same punch mark *c* on the wheel cover. By proceeding thus, the punch mark at *g*, diametrically opposite the punch mark at *f*, will be obtained, and when the wheel is turned so that the tram will just fit into the punch marks *c* and *g*, the engine will be on the back center. The centers on the left side also may be found by a similar process.

Great care must be observed that the lost motion in the main-rod brasses be taken up in the same manner as it is taken up when the engine is working steam. Also, after getting the center marks *f* and *g* on the driving wheels for the forward motion centers, the same center marks can be used for the backward motion. Instead of using the mark *b* on the guides, two punch marks *r* and *s* and a tram may be used, one mark being on the guide block, and the other on the crosshead.

MARKING PORT MARKS.

69. The trams used in locomotive valve setting are generally standard, and the valve rod usually contains punch marks called **port marks**, which enable the valves to be correctly set without removing the steam-chest covers. If the port marks are missing, they may be found in the following manner, after the steam-chest covers have been removed:

First of all, take up any lost motion between valve and yoke by putting thin liners in between back end of valve and the yoke. Then place the engine about on the quarter, and move the reverse lever until the front edge of the valve is so near the outside edge of front steam port as to just admit a thin piece of tin between valve and port, Fig. 60. Make a center-punch mark *c* in the face of the back cylinder head, and then,

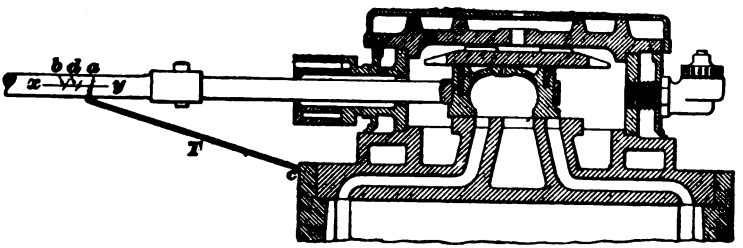

FIG. 60.

by meams of the tram *T*, scribe a line *a* on the valve rod and punch it where it crosses the center line *x y*. This punch mark will then be the front port mark, and by means of it, and without removing the steam-chest cover, we can tell when the valve is in the position shown in Fig. 60.

To find the back port mark, take the liners out of back end and put them between yoke and front end of the valve. Then keeping the engine on the quarter, move the reverse lever until the tin will just go in between the back outside edge of the valve and the outside edge of the back steam port. Then with the tram *T* in the same punch mark *c*, scribe the line *b* and make a punch mark where this crosses the line *x y*; this punch mark is the back port mark. The distance between the marks *a* and *b* is just equal to twice the lap of the valve; hence, if one end of the tram is in the punch mark *c*, and the other at the point *d*, half way between the marks *a* and *b*, the valve will be in its mid-position.

DETERMINING THE LENGTH OF VALVE ROD.

70. On most modern locomotives the valve rods are so made as to permit of no adjustment; therefore, the length of the rod and stem is always the same. In a great many

engines, however, the valve rod is made adjustable, and hence the total length of the valve rod and stem is liable to be varied. To determine whether the valve rod and stem are of the proper length, place the top rocker-arm vertical, that is, at right angles to the valve rod. Then, by means of the tram, Fig. 60, try the position of the center-punch mark *d*. If the valve is in its mid-position, the rod and stem are the right length. If the point of the tram falls in front of the mark *d*, the valve rod is too short; while if it falls behind it, the rod is too long.

TRYING THE LEAD.

71. Explanations.—In **trying the lead** of a valve, the following may be the objects in view: To determine how much lead, if any, the valves have, and to determine whether they have the same amount of lead on both their forward and backward strokes, and also in both forward and backward gears.

Lead, it will be remembered (Art. **54**), is the amount the valve is open for the admission of steam at the beginning of the stroke of the piston; therefore, to measure the lead for the forward motion, the reverse lever must be in forward gear with the main pin on the forward or backward center, depending on whether the lead at the front end or back end is desired. To measure the lead for the backward motion, the lever must be placed back of the center of the quadrant. The position in which the lever is to be placed on the quadrant will depend on the part of the stroke for which it is desired to measure or compare the leads. If it is desired to measure the lead for the corner notch, the lever must be placed in the corner; if we wish to measure the lead for the 6-inch notch, the lever must be placed in that notch; and so on for other notches.

72. Measuring the Lead.—To **measure the lead** in forward motion for the front end of the cylinder, place the reverse lever in the forward corner, and turn the driving wheels forwards until the main pin is on the forward dead center, as determined in Art. **68**. Then by means of the tram *T*, Fig. 60, scribe a line on the valve rod. If this line falls in front of the port-mark line *a* (i. e., between *a* and *y* in the figure), the valve

is open an amount equal to the distance between the two lines, and the valve has that amount of lead. If the distance between the lines is $\frac{1}{32}$ inch, then the valve has $\frac{1}{32}$-inch lead, and so on. If the line falls behind *a*, the valve, instead of having lead, is closed an amount equal to the distance between the lines, or, in other words, the valve is **blind** by that amount.

To measure the lead in the forward motion for the back end of the cylinder, leave the reverse lever in the forward corner, but turn the driving wheels forwards until the main pin is on the back dead center. Then with the tram scribe a line on the valve rod. If this line falls behind the port mark *b*, the valve has an amount of lead equal to the distance between the lines, but if it falls in front of *b*, the valve is blind at that end by an amount equal to the distance between the lines. The lead for the backward motion is determined in exactly the same manner as for the forward motion, only it is to be remembered that the drivers must be turned forwards in determining the lead in forward motion, and turned backwards when the lead in backward motion is required.

In order to avoid confusing the forward- and backward-motion lead marks on the valve rod, those for the forward motion had better be scratched from the line *x y upwards* (Fig. 60), and those for the backward motion from the line *x y downwards*. By following this method there will be no chance of mistaking the lead marks.

DETERMINING WHETHER ECCENTRIC RODS ARE OF PROPER LENGTH.

73. By Port Marks and Lead Marks.—Having both the port marks and the lead marks on the valve rod, it is a simple matter to determine whether the eccentric rods are of **proper length**, and, if not, how much they must be altered. If the valve has the same amount of lead at both ends in, say, the forward motion, then the go-ahead eccentric rod is the right length. If the leads are unequal, a change must be made in the length of this eccentric rod. To determine how much the rod needs altering, proceed as follows: Find the center point between the lead marks on the line *x y*, Fig. 60; if this point falls in front

of the center point *d* of the port marks, the go-ahead eccentric rod is too long, and will have to be shortened an amount equal to the distance between the two center points. If the center point between the lead marks falls behind the center point *d*, the go-ahead eccentric rod must be lengthened by the amount this center falls behind *d*, the rocker-arms being assumed of equal length.

Next consider the lead marks for the backward motion: If the center point between the lead marks falls forward of the center of port marks *d*, the back-up eccentric rod is too long, and must be shortened an amount equal to the distance between these center points; if it falls behind point *d*, this eccentric rod must be lengthened.

From the foregoing it will be seen that if the lead in any motion is unequal, it can be equalized by altering the length of the corresponding eccentric rod. If the lead is equal, it can be increased or decreased by shifting the eccentrics around in the proper direction on the driving axle.

74. By Observation.—To determine whether the go-ahead eccentric rod is the right length, place the reverse lever in the forward corner, open the cylinder cocks, and then open the throttle far enough to move the engine slowly forwards. Watch the cylinder cocks, and if steam shows at the front and back cocks at about the same point of the strokes, the go-ahead eccentric rod is the right length. If it discharges too soon from the front cock, and too late from the back cock, the go-ahead rod is too long; while if it discharges too late from the front cock, and too soon from the back one, the rod is too short.

To try the back-up eccentric rod, place the reverse lever in full gear backward, open the cylinder cocks, and then open the throttle slightly. If steam shows too soon at the front, and too late at the back cock, the back-up eccentric rod is too long; while if it shows too late at the front, and too early at the back cock, the back-up eccentric rod is too short.

Before applying the above test, close the lubricator steam valve (leading from boiler) or otherwise considerable steam will come out of the cocks and so interfere with the test.

DETERMINING THE POINT OF CUT-OFF.

75. It is very important that steam be admitted to the two cylinders during equal parts of the stroke, both during the forward and backward stroke; hence, it is desirable to understand a method of "trying" the cut-off. Usually the point of cut-off is determined for full gear, for half gear, and for the 6- or 8-inch notches, but since the method of determining the point of cut-off is the same for all positions of the reverse lever, it will be determined for one position only—say for the 6-inch notch.

The first thing to be done is to find the extreme travel of the crosshead on both the forward and backward strokes. To do this, hold a straight piece of wood or iron firmly against the end of the crosshead and the side of the guides in such a manner that as the crosshead moves towards the end of its stroke, it will push the piece of wood or iron before it. Move the crosshead slowly ahead until it has completed its stroke and has moved far enough on its backward stroke to admit of a scratch *a*, Fig. 59, being made on the guide bar along the face of the piece of wood, which, of course, will remain at the extreme travel of the crosshead. This scratch marks the extreme distance that the crosshead travels, and is called the travel mark. The travel mark *n* for the opposite stroke of the crosshead should be found in the same manner, and marked by another scratch on the guide bar. The object of getting these travel marks is to enable the travel of the piston to be measured, since the travel of the crosshead is exactly the same in length and direction as the travel of the piston.

To measure the cut-off for the front end of the cylinder (forward motion), place the reverse lever in the notch for which the cut-off is to be measured (the forward 6-inch notch in this case), and turn the drivers forwards until the main pin has crossed the forward center and the crosshead has begun its stroke towards the back end of the engine. Then turn the driver slowly and watch the motion of the valve by means of the port marks on the valve stem (see Fig. 60). The valve will move backwards for a time, but will soon change its direction of motion and move forwards. The tram should then be placed

in the punch mark *c* in the cylinder head, and the drivers moved forwards until the tram mark *a*, Fig. 60, coincides with the point of the tram *T*, when the valve will be at cut-off (see cut-off, Art. **43**). Now, measure the distance between the front end of the crosshead and the front travel mark on the guide, to see how far the piston has traveled on its stroke, and mark it down so as not to forget it. If the travel is 6 inches, the cut-off is all right; if it is more than 6 inches, the cut-off occurs too late; while if less than this amount, the cut-off is too early. Next, leave the reverse lever in the forward gear and turn the driver forwards again until the main pin crosses the back dead center, and obtain the cut-off for the back end of the cylinder, as explained above, the travel being measured from the back-travel mark *n*. By comparing this cut-off with that for the front end of the cylinder, it will be readily seen whether they are equal or not. The cut-off for the other cylinder may be found by the same method. The method for trying the cut-off for backward gear is the same as for forward gear, with the exception that the reverse lever must be placed in the back-gear 6-inch notch, and the drivers must be turned backwards instead of forwards.

ADJUSTING THE CUT-OFFS.

76. The cut-offs in one cylinder may occur later than in the other, or they may be unequal in the same cylinder. If they occur later in one cylinder than in the other, the defect may be remedied by raising the link on the side that has the longer cut-off and lowering the other link until the proper mean is struck; this may be accomplished by shortening one link hanger and lengthening the other. Generally the equalization may be effected by altering the length of only one of the hangers.

If the cut-off for one end of the cylinder is longer than for the other end, it may be due to a rocker-arm being sprung, in which case straightening the rocker-arm will restore the equality of the cut-off. Frequently an inequality of the cut-off for the forward motion is corrected by throwing the backward motion out—lengthening or shortening the valve rod, and thus sacrificing the equality of the lead. Considerable experience in valve setting is necessary to effect an equalization by any of the methods.

LOCOMOTIVE MANAGEMENT.

INSPECTION, CARE, AND MANAGEMENT.

INSPECTION OF LOCOMOTIVES.

1. The degree of success attained by an engineer will depend not only on his ability to handle an engine in such manner as to obtain the greatest amount of work from it with the least possible expense for fuel, lubricants, and running repairs, but also on the care he exercises in seeing that the locomotive is kept in good running order, thereby preventing delays in the service, and possible accidents in which life and property may be destroyed. Frequent and thorough inspection of all parts of the locomotive is, therefore, essential to his success, since it is by this means that loose and broken bolts and other defects can be discovered and repaired before the next trip, and thus avoid trouble that otherwise would occur on the road. Some railroads employ locomotive inspectors, whose duty is to thoroughly inspect each locomotive as it comes in, and report needed repairs. On most roads, however, it is the duty of the engineer to locate and report defects, and he should see that the work reported has been properly performed. However, whether an inspector is employed by the railroad or not, an engineer must regularly make a careful examination of his engine, since by so doing it not only lessens the chances of failures while on the road, but it gives him a greater feeling of confidence in his engine.

2. In making an inspection, it must be ascertained whether there are any loose joints, bolts, or nuts; whether any of the parts are defective through wear or otherwise, and ought

For notice of copyright, see page immediately following the title page.

to be renewed; whether any of the parts are missing; and whether the bearings are in such condition as will insure their running cool during the next trip. By feeling the bearings immediately after the run, and before they have had time to cool, their temperature can be determined.

The engine and tender should be inspected as soon after each trip as possible, in order that sufficient time may be had for repairs before the engine must go on another trip. After inspection, any needed repairs should be correctly reported, and engineers must make it their duty to inspect the reported work before leaving on their next trip, so as to be satisfied that the work has been properly done.

To inspect the engine, begin at the back driver where you come down from the cab, and make a careful examination of the wheels, for broken or cracked flanges, cracked spokes, cracked wheel centers, or for wheels working loose on axles. On all paper wheels, the bolts that run through the tire and the center plates of the wheels should be carefully examined, as they work loose quite frequently and thus allow the tire to become loose. The springs, spring hangers, and equalizer cradle hangers and pins should be examined, also, as they sometimes break and allow the center casting to drop down upon the cradle frame. This makes the engine truck rigid, and causes it to curve hard. The driving springs and hangers should be carefully looked over, and then the pedestal braces, wedges, and cellar bolts. It should be observed whether the eccentric-strap oil cups, the rod cups, guide cups, and the piston-rod and valve-stem oilers are in good working order. If these are neglected and allowed to become clogged up, trouble will surely follow; for in that event the oil cannot get out of the cups.

It is consistent with good judgment to occasionally take down the tank hose, and to thoroughly clean it and the screens. The brake equipment should also be inspected to see whether it is in good working order and that there are no leaks in the reservoirs or piping. The pulling bar and pins between the tender and the engine should also be carefully inspected to see whether they are in good order and that there are no cracks or breaks that might, perhaps, lead to a failure while on the

road. The tender wheels, springs, spring hangers, and brake rigging should next be carefully examined to ascertain if they are in good order. The firebox should next be carefully examined, also the crown sheet, to see that there are no leaky crown-bar bolts, flues, or side sheets. The injectors, also, should be tried to ascertain whether both are in good working order. If defects are discovered during the inspection, a correct report must be made stating the nature of the work to be done and just where to find the trouble. This report should be made so clear that the shopmen cannot possibly make a mistake in the work to be performed.

Besides the regular inspections referred to above, an engineer should make as careful an inspection as possible of all the parts of the engine in sight every time he "oils around." This practice, if persisted in, will soon become a habit, and, after a time, it becomes second nature for his eye to unconsciously look over the parts of the engine, seeking defects.

3. Reporting Work.—Next in importance to a careful inspection of the locomotive is the proper reporting of work that is found necessary to be done, and care should be taken to see that the reports are perfectly plain in every respect so that the repair men will be able to locate the defects readily and make the repairs in the least time possible. In many instances, reports are so made that more time is consumed in finding the defect than in making the repairs. For example, instead of reporting "engine blows," care should be taken to locate the blow and report its exact location. Instead of reporting "engine pounds on left side," a better practice is to locate the pound, when an opportunity occurs, and specify the exact location. Instead of reporting "air pump will not work," ascertain the cause and report the proper defect; for instance, write, "Nuts off air piston of air pump," if that is the defect. The following are several examples of the way to report defects: Examine right injector, tubes incrusted; choke plug in lubricator, right side, worn too large, new one required; left cylinder packing blowing badly; face right valve seat; tubes leaking, calk and roll if necessary; line down wedges of right main driving box; etc.

CARE OF LOCOMOTIVES.

FRICTION.

4. The bearings of every kind of machine, however driven, require lubricating, otherwise a considerable loss of power will result through frictional resistance between the journals and their bearings. This power that is lost through frictional resistance is converted into heat; hence, in fast-running machinery, sufficient heat may be generated to overheat the journals and their bearings, thus causing a *hot box*. Lubrication not only reduces the frictional resistance between the journal and its bearing, but it also helps to dissipate the heat that is generated, thus making it possible to run heavy machinery at high speeds for long periods of time. It will therefore be seen that lubrication is an important study, and to be a thorough master of the subject, one must understand friction and the nature and properties of the lubricants used.

5. Effect of Friction.—If the hand is placed on a board and moved along its surface, it will be observed, *first*, that a resistance is offered to the movement of the hand; and, *second*, that if the movement is continued, the hand becomes heated. The term **friction** is given to this resisting force that acts between a body and the surface on which it moves or tends to move. Friction always acts in opposition to the force that moves or tends to move a body; in other words, if a body is in motion, the friction between it and the surface over which it moves tends to retard the movement of the body, while if the body is at rest and a force is applied tending to move it, the force of friction acts to prevent the movement. In either case, if the force applied is sufficient to overcome the force of friction, the body will be kept moving and energy will be expended in doing work in overcoming the frictional resistance. The energy thus expended or used up is converted into *heat*. The muscular energy expended in briskly rubbing two dry pieces of wood together may be sufficient to cause them to ignite and burn. Grasp a vertical rope with your hands and slide quickly down it and you will be made painfully aware of

the energy that is converted into heat in overcoming the frictional resistance acting between your hands and the rope. Place your hand on a car wheel or engine wheel to which a brake has been applied during the descent of a long hill, and note the heating effect of the energy that was converted into heat in overcoming the resistance between the brake shoe and the wheel.

6. Kinds of Friction.—The friction exerted between solids may be divided into **rolling friction** and **sliding friction**; that exerted between fluids is called **fluid friction.** Rolling friction is the resistance that a rolling body meets from the surface on which it rolls, as for instance, the resistance offered a car wheel rolling on a rail. Sliding friction is the resistance that a sliding body meets from the body on which it slides, as for instance, the resistance offered the crosshead sliding on the guides, the journals sliding in their bearings, the valves sliding on their seats, etc.

7. Cause of Friction.—Friction between two bodies is due to the roughness and unevenness of their surfaces, hence, the smoother the surface, the less the friction will be. However, two bodies may have polished surfaces, and, to the naked eye, may appear perfectly smooth, yet, when placed under a powerful magnifying glass, they will be seen to have minute elevations and depressions that fit into one another somewhat as shown in Fig. 1. When one of these bodies is made slide over the other, these elevations are either ground off or flattened down. In either event, a resistance to the movement is offered, the amount of which will depend on the roughness of the surfaces.

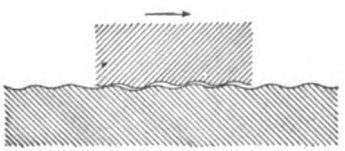

FIG. 1.

In the case of rolling friction, the elevations fit into the depressions as shown in Fig. 2, and when one body is rolled along the other, the action is somewhat similar to that of a toothed pinion rolling on a rack. The tearing and flattening effect, therefore, is very much less than in the case of sliding

friction; hence, rolling friction is considerably less than sliding friction.

The amount of friction between two bodies depends on the nature of the bodies, and on the pressure holding them together, the resistance varying directly with the pressure. Friction is independent of the velocity of the motion as well as of the area of the surface in contact. It may be lessened considerably by polishing and lubricating the surfaces that move upon each other, and, also, it has been found in many cases that by using bodies of different materials the resistance will be reduced. For this reason, the journal bearings of cars and locomotives are made of brass and anti-friction metals, while the journals are of steel and iron.

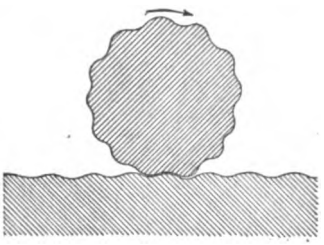

FIG. 2.

8. **Starting Friction.**—Friction is greater when a body is just on the point of moving than when the body is in motion. You will be readily convinced of this if you note the struggles of a team of horses in starting a heavy load, and the comparative ease with which they haul the load when it has been fairly started. If this is not convincing, load a wheelbarrow and try the thing for yourself, or start to draw a heavily loaded sleigh. If a spring scale is fastened to the sleigh so as to register the amount you pull, it will clearly show that the amount of frictional resistance to starting—**starting friction**—is greater than the amount offered to the sleigh's movement when it is once in motion.

By backing the engine until the slack in the train is taken up, and then starting forwards, a locomotive will very frequently handle a train that it is unable to start with the train stretched. The train is thus started one car at a time and is kept in motion with comparative ease. In this case, the starting friction of each car is overcome separately, the momentum of the moving part of the train helping very materially to start the remainder.

Wherever there is relative movement between bodies in contact, there is friction; and when the number of moving bodies or parts are numerous, as in a locomotive and train, the subject of how to reduce the friction becomes of vital importance, since the friction absorbs and wastes a large amount of the available motive power, converting it into undesirable heat. It thus will be seen that friction in bearings, surfaces, etc. is very undesirable, and at first glance one is very apt to think that friction is always undesirable. A little reflection, however, will soon show that this is not the case. It is true that friction is always a resisting force and that it never produces or accelerates motion, but without friction the driving wheels of a locomotive would not adhere to the rails, consequently it would be impossible to move even the engine; the brake shoes would have no retarding power over the wheels, and our air-brake system would be of no use; men and animals could not walk if there were no frictional resistance between the foot and the earth; it would be impossible to erect buildings, for lack of friction between the nails and the wood; and, without friction, thread, rope, cloth, etc. would not hold together.

FLUID FRICTION.

9. When a fluid flows in a current through a mass of fluid, or when it moves in contact with a solid, a resistance is experienced, due to the relative motion of the layers of fluid in contact with one another. This can best be understood by describing the action when a fluid flows in contact with a solid, which is as follows: A layer of fluid adheres to the surface of the solid and has no motion relative to it; the next layer of fluid, however, has relative motion, and the velocity of the succeeding layers increases as their distance from the solid increases. Under these conditions, there is relative motion between the adjacent layers, which sets up a resistance to the flow. The effect of this resistance on the flow of a fluid is clearly illustrated in the flow of water in a stream, in which it will always be found that the velocity is least at the shores and gradually increases toward the center, or, rather, toward the part that is deepest. That this is true can be determined

experimentally by dropping pieces of wood in the stream at different distances from the shore and noting the velocity with which they move. Likewise, it can be shown by experiment that the motion of the water is least at the bottom of a stream, and that it increases as the distance from the bottom increases. The resisting force between layers of a fluid acts in such a direction as to tend to decrease the motion of the layer of water that is flowing the faster, and to increase the motion of the slower layer. It is due to fluid friction that a floating object moves with the stream. *Fluid friction, therefore, is the resistance that a layer of fluid meets from adjacent layers that are in contact and moving relatively with it.* The particles of fluid adhere slightly to one another, so that when a layer of fluid moves, it tends to drag the adjacent layers with it, as already mentioned, while they tend to hold it back. The property that the particles of fluid possess of adhering together is called **viscosity**, and fluids that possess this property to a high degree, as molasses, heavy oils, etc., are said to be viscous.

It has been found (1) that fluid friction is independent of the pressure between the masses in contact, that is, the friction of fluids is unaffected by variations of pressure; (2) that the friction of fluids depends directly on the area of the surfaces in contact, being directly proportional to it; (3) that fluid friction depends on the relative velocity between layers, being proportional to the square of the velocity at high speeds, but only to about the velocity at slow speeds; (4) that fluid friction does not depend on the nature of the solid against which it may flow, but on the degree of roughness of the surface of the body; (5) that the friction of fluids depends on the density of the fluid, and increases with the density. Fluid friction is less than either rolling friction or sliding friction.

LUBRICATION.

10. The object of using lubricating oils on journals, etc. is to reduce the amount of friction to a minimum by substituting the friction of fluids for the sliding friction of solids. A perfectly lubricated bearing, therefore, should follow the laws of fluid friction, but, unfortunately, it is not possible in practice to

obtain perfect lubrication. In the case of a freely lubricated journal subjected to light pressure at high velocities, the conditions will closely approximate that of a perfectly lubricated journal, and the journal will float as it were on the two films of fluid that adhere to the surfaces of the journal and its bearing and are continually interposed between them. In this case, the friction in the bearing occurs simply between the two layers of fluid that adhere to the two surfaces. However, at slow speeds and with the journal subjected to very heavy pressure, the journal and its bearing are forced into close contact, and the friction in that case is partly solid and partly fluid friction. In this case it will be greater than in the first, as will be shown by the wear of the surfaces. In most cases it will probably be found that the journal and its bearing are not completely separated by the film of lubricant interposed between them, but that they partly rub on each other and are partly separated by the layer of lubricant; hence, the friction in this case will follow neither the laws of solid nor fluid friction, but will approximate one or the other, depending on the condition of the journal. With scant lubrication, the friction will approximate that of sliding friction, while with sufficient lubrication, the friction will approximate that of fluid friction.

LUBRICANTS.

11. Lubricants are divided into **solids,** as graphite; **semisolid,** as animal fats, vegetable greases, and preparations from mineral oils; and **liquids,** which include a variety of animal, vegetable, and mineral oils. It is the liquid mineral oils that we shall consider.

The **mineral** oils are derived from coal by distillation, while the **petroleums** (mineral oils, also, but slightly different chemically) are found in subterranean chambers in the vicinity of coal deposits. Both the mineral oils and the petroleums are hydrocarbons and belong to the class of oils known as *volatile oils.* They have no affinity for oxygen or moisture, and will not ferment or decompose in any temperature. As petroleum oils have entirely superseded the mineral oils derived from distillation from coal, only the former will be treated.

12. Petroleum Oils.—Petroleum is used in great quantities for lighting, heating, and lubricating purposes. As taken from the earth, it is composed of a mixture of hydrocarbon compounds ranging from a light, incondensible gas to solids. When subjected to heat, the component parts of the petroleum separate, and, if each part that is separated is again heated, it will be divided into another series of hydrocarbon compounds. It is due to this property of crude petroleum that so many different products are obtained from it.

In preparing crude petroleum for the market, it is either purified, condensed, or distilled. In most cases, however, the last method is the one used.

Benzine is the first product obtained from the distillation of crude petroleum. As the process of distillation is continued, and the temperature is gradually increased, several grades of oil, known as *burning* oils, are obtained. These oils are collected separately and treated chemically to bleach and free them from impurities and they then form *illuminating* oils. By the time these oils are removed only about 20 per cent. of this crude petroleum remains, and it is from this that the lubricating oils are obtained. Black lubricating oils, such as are used on car journals, are obtained by subjecting this remaining 20 per cent. to distillation, with a gradually increasing temperature until a temperature of 380° F. is obtained. By this means all the lighter grades of oil that will flash at a temperature lower than 380° F. are driven or distilled over. The process of distillation is not continued above the temperature of the fire test that the oil must stand.

The brighter colored engine oils are obtained by filtering the oil through charcoal after distillation. If heavier oils of still higher fire test are desired, the distillation is continued up to a temperature corresponding to the desired fire test. To obtain the heavy cylinder oils having a fire test of about 680° F., the distillation is continued to that temperature.

13. Flashing Point.—The temperature at which an oil will give off vapors in sufficient quantities to allow of their ignition is called the **flashing point** of that oil. It has

been found, by experiment, that 3 parts of petroleum vapor mixed with 1 part of air will ignite with a slight report when a match is touched to it, while 9 parts of vapor with 1 part of air will cause a violent explosion. At temperatures lower than its flashing point, an oil will not give off sufficient vapor to cause an explosion; if heated to its flashing point, however, it will give off just sufficient vapor to cause a flash if a light is applied, although the oil itself will not ignite. If the temperature is increased above the flashing point an explosive mixture will be formed that may prove to be dangerous.

The lowest temperature at which an oil will take fire and burn is called its **burning point.** The burning point of an oil may be from 10° F. to 75° F. higher than the flashing point; for petroleum oils it is generally from 40° F. to 50° F. higher. The amount of vapor given off by an oil increases rapidly as the temperature is raised above the flashing point of the oil, and if the temperature of the oil is at the burning point, the oil will ignite and burn also. It is of great importance to remember that an oil should never be used in places where it will be subject to temperatures higher than its flashing point. It should be remembered, also, that the nearer the temperature of an oil approaches its flashing point, the less is the lubricative power of the oil. An oil may be a very good oil under normal conditions, and yet, should the part it is lubricating become hot, it may be totally useless. More than that, it may even be detrimental, since it may take fire and burn, in which case the bearing is further heated, and, besides, a residue will be left that will cause additional trouble.

It is well to remember, also, that while a cylinder oil will not be injured by being subjected to a moist heat, as when introduced into the steam chest, yet it deteriorates rapidly when subjected to a dry heat, especially at high temperatures.

OILING.

14. Quantity of Oil Required by Various Parts. The amount of oil required by the various parts of an engine will depend on the size and type of the engine, the work performed, the time occupied in doing that work, the conditions

under which the engine is worked, and the quality of the oil used. All the bearings and wearing surfaces should be oiled with just sufficient oil to thoroughly lubricate them. Heavy consolidation engines weighing over 100 tons require far more oil than do the light eight-wheeled engines that only weigh 30 or 40 tons, for they have more bearings to oil and more strain comes on each bearing; yet the attempt is often made to make the same mileage to a pint of oil with large engines as with small ones.

A heavy freight engine with small drivers, which is 18 to 24 hours in getting over a division, should be allowed more oil than a large-wheeled engine with a light train, which, perhaps, is only 7 or 8 hours going the same distance. The same rule may be applied to the use of valve oil. A large, heavy engine with a slow train may only make a low mileage to the pint of valve oil, while a light engine on a light train, and running at a good rate of speed, would have no trouble in doubling the distance to the pint.

Engine oil may be used to advantage in the main-rod and side-rod cups, on light engines, and, in some cases, on heavy engines; but, as a general rule, the main-rod brasses on heavy engines require something more substantial. Graphite can be mixed with the oil with good results, but, as a general thing, valve oil or grease will give the best results.

In oiling an engine, care should be taken not to overflow the cups, boxes, etc. In oiling tender journals, if the oil is poured in toward the middle of the box and along the side of the journal, better results will be obtained than if it is poured into the end of the box, provided the dust guards are in and in good condition. By keeping the cellars and oil boxes of a locomotive well packed, it can be run with less liability of hot boxes and cut journals, and more economy will be shown in the amount of engine oil used.

PACKING BOXES.

15. Materials Used in Packing.—The material used for packing boxes should consist of either cotton or woolen waste that has been thoroughly saturated with lubricating oil,

long-fiber waste being much preferable to the short-fiber. Waste that has been soaked in oil for several days will give much better service than waste that has been soaked for a short time only, for the reason that the former is thoroughly saturated with oil while the latter is not. In fact, waste should be mixed with and kept under oil for at least 3 days before using, after which it should be placed on a wire netting to allow the excess oil to drain off. Waste should not be swimming in oil when used; it should be in such a condition that the oil will just ooze out when it is subjected to light pressure. When carried on an engine ready for use, packing, or **dope**, as it is called, should be kept in a covered bucket made for the purpose, in order that cinders and grit will be kept out. Among the other tools, all engines should have a set of packing irons, which consists of a hook for pulling the packing out of the boxes, and a tool to be used in pushing the packing into the boxes and around the journals.

In order to allow the brass to be taken over the collar on the end of the journal without having to raise it too high, an iron wedge or key is placed between the top of the brass and the top portion of the oil box. This wedge fits behind a lug in the top of the oil box, which prevents it working out. If this wedge breaks or gets out of place, the strain on the brass will be unevenly distributed and will cause it to run hot at once. To remove a wedge, raise the box high enough so that the wedge will slip out under the lug; this gives room enough to lift the brass over the collar. After replacing a brass, the wedge must be replaced and the box let down before packing. One or two spare wedges and tender brasses should always be carried in the tender tool boxes.

In packing the boxes for the first time, the space below the journal should be filled with packing, but care should be taken not to squeeze it in hard, for there is such a thing as packing a box too tightly. When too much packing is forced into a box, it is wedged against the bearing, a large quantity of the oil is squeezed out of it, and, as a result, the bearing may run warm. In packing driving-box cellars, it is important to put in just sufficient packing to insure its keeping up against the journal.

If the packing used contains too much oil, it will remain up around the journal when first put in, but as soon as some of the oil works out, the packing will settle in the cellar, and will not fill the space around the journal, the result being about the same as though the box were not packed at all. A great many cellars have a movable plate bolted to them that can be dropped down the length of the slotted holes in the plate by simply slacking off the nuts, thus making the cellars easy to pack. After the cellar is packed, the plate must be fastened up again, to keep the packing from working out. Without this plate, the cellar should come down and the packing be put in so that it will not roll up behind the journal and wedge up hard, causing unnecessary friction.

16. Packing Hot Boxes on the Road.—When packing hot boxes on the road, the old packing had better be removed and the box repacked with new dope. After packing a box, always see that no pieces of the packing hang out of the box, for they will cause a waste of oil; capillarity will cause the oil to follow the waste just as it causes the oil to follow the wick of a lamp; hence, oil will slowly run out of the box and be wasted. Some engine-truck cellars slide in and out so that the bolt must be taken out in order to pack the cellar; on other forms of truck cellars, the cellars drop down so that it is only necessary to take out one cellar bolt to drop the cellar. The quickest way to pack the latter type of engine-truck cellars is to take out the cellar bolt at the end of the cellar furthest from the wheel and allow that end of the cellar to drop down; then there will be a good chance to take out the old packing and repack the cellar. After repacking, the cellar can be raised into place by means of a small bar or lever, using the lower bar

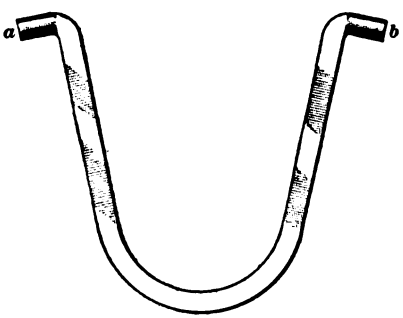

FIG. 3.

of the truck frame as a fulcrum. After replacing the cellar bolt, secure it so that it cannot work out.

Sometimes it is very difficult to pull down a driving-box cellar after the cellar bolt has been removed. In such an event do not try to force it down by driving an iron wedge or a cold chisel in between the edge of the cellar and the journal, because you are liable to damage the journal. The best plan is to use a cellar remover similar to that shown in Fig. 3. This consists of a round bar of ½-inch steel bent into the form shown in the figure. One end *a* of the remover is placed in the cellar-bolt hole on the left side, and the arms of the remover are then sprung together sufficiently to permit the end *b* to enter the cellar-bolt hole at the right, as shown in Fig. 4. A block can then be placed between the two ends of the remover to prevent their slipping out, and a bar used to pry down, using the pedestal brace for a fulcrum. A very good adjustable cellar remover is shown in Fig. 5. Of course, engines are not provided with cellar removers, and if a driving-box cellar has to be taken down on the road, some other means will have to be used. Sometimes a long ½-inch bolt can be bent so as to have a hook on one end and a handle on the other, which can then be used

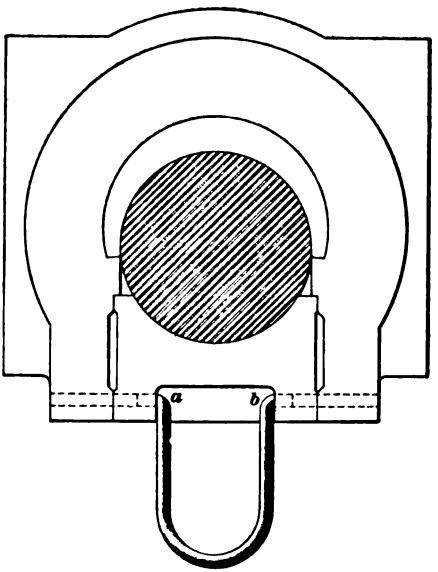

FIG. 4.

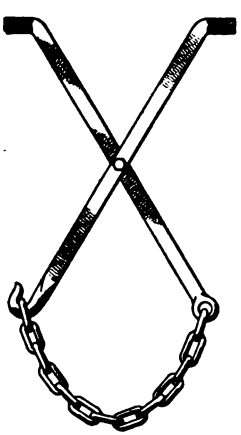
FIG. 5.

to pull down the cellar. When it has been taken down, pack it in the same way that you would an engine-truck cellar, although as a general thing it should be packed tighter.

PACKING PISTON RODS AND VALVE STEMS.

17. As the use of metallic packing for valve stems and piston rods has gradually grown into general favor, the use of the old-style fiber packing has gradually been discontinued. However, many engines still have the old-style fiber packing, and, therefore, a few words regarding its use will not be out of place. Hemp, rubber, soapstone, and asbestos are substances commonly used for this purpose, and, in most cases, give good results if used properly. The great secret of making fiber packing steam-tight lies in its not being squeezed too tightly in the stuffingbox. If a rod is packed too tightly, friction will soon cause the rod to heat and char or burn the packing, and the result will be leaky packing. Putting new packing in on top of the charred packing will not help matters much. On the other hand, if the packing is put in properly and the gland is not screwed up too tightly, the rod will not heat and the packing will remain steam-tight for a long time. As it becomes necessary, the gland can be tightened up, and after it has been tightened a few times, another ring or two of packing may be added with good results. Rubber and hemp make very good packing, and, as a general rule, will give the best service if properly used.

18. The best way to pack piston rods is as follows: Place the side that requires packing on either quarter, with the reverse lever in mid-gear; set the brake, or else block the driving wheels; then take the nuts off the gland studs, taking care to place each nut as it is taken off in such a position as to insure the nuts being put back on their proper studs; next pull out the gland and slip it back on the rod near the cross-head, then give the engine a little steam and move the reverse lever so as to uncover the steam port to the back end of the cylinder to blow the old packing out clean. If the neck ring comes out, it can be punched back into place with the packing

iron. The material used for packing should be just large enough to fill the space between the rod and the sides of the stuffingbox, and should be put into the stuffingbox in the form of a ring. The packing should be well oiled before it is put in, and if a little flake graphite is used, in addition to the oil, it will have a good effect. As each ring is put in, it should be pushed as far into the stuffingbox as it will go, care being taken to *break joints* with each ring. When the stuffingbox is full, the gland may be screwed up moderately tight and the jam nuts tightened so that they cannot work off.

When rubber rod packing is used, a ring of hemp or wicking should be placed between the last rubber ring and the gland, in order to keep the rod clean. Valve stems should be packed in a similar way.

The life of the rod packing will be lengthened considerably if the rods are kept well lubricated by means of a swab.

19. A throttle-valve stem may be packed in the same manner as a piston rod or valve stem. Good results can be obtained by cutting washers out of rubber hose. They should be cut so as to just slip over the stem, and should fill the space between the stem and the sides of the stuffingbox. The washers should be soaked in oil and graphite before being put in place. Rubber packing is objectionable where iron throttle stems are used, for the reason that the sulphur in the rubber attacks the iron and pits it. With brass-covered throttle stems, however, this pitting does not occur. Tea lead and asbestos in alternate layers makes a good packing for either brass or iron stems, as it wears well and will withstand the increased temperature of the high steam pressures. To pack a throttle-valve stem, the throttle lever may have to be disconnected.

20. Packing Cab Fixtures.—Asbestos wicking is about the best material to use for packing the stems of the various cab fixtures, such as injectors, steam valves, etc. After the gland nut has been taken off and the old packing removed, the asbestos wicking, which previously should have been saturated with oil and graphite, should be wound around the spindle and forced into place until the stuffingbox is full;

then screw the gland nut just a little tighter than it can be done with the hand. If the nut goes down quite a distance, it is best to take it off again and put a little more packing in the stuffingbox. Never tighten the nut so that the spindle cannot be turned easily. Another good way to pack globe-valve stems and injector-ram stems is to first put a ring of asbestos in the bottom of the stuffingbox, fill the box nearly full of graphite, and put another ring of asbestos on top of this; the gland nut is then screwed down until it feels solid. This will make a perfectly steam-tight packing, and if it does start to blow a little it can be made tight again by tightening the gland a little.

After asbestos packing has been in use for some time it becomes hard and will leak. When in this condition it can be softened and made tight by taking off the gland nut and saturating the packing with oil.

CARE OF METALLIC PACKING.

21. To obtain the best results from the use of metallic packing, the rods should be in good condition before the packing is put in, otherwise both the time and the material will be wasted, for, in this case, this packing cannot be kept from blowing. Even when the packing is in good condition when it is put in, it must receive proper care in order to insure the best results. If metallic packing is allowed to run without being oiled, it will soon give trouble. The best way to oil the packing is by means of a swab that is supplied with oil from a cup provided for the purpose. As the piston rod or valve stem moves back and forth through the oily swab, it is kept clean and thoroughly oiled. Some makes of metallic packing are equipped with a regular swab cup. A very good swab may be made for engines not equipped with swab cups by winding some wicking on a piece of wire and fastening the wire to the gland nuts in such a way that the swab will lay on the rod or valve stem. This form of swab must be oiled by hand.

22. Worn Packing.—When metallic packing has been in use for some time and begins to blow a little, it indicates that the packing rings have worked around until they do not

break joints, or, have worn until they are slightly larger than the rod; in the latter case the ends of the rings should be filed off a little to allow them to close around the rod again. The one thing, however, that will add most to the life of metallic packing is to keep it well oiled. Close observation will always show that the rod packing on an engine that receives a liberal amount of valve oil through the lubricator lasts much longer than the packing on engines on which the valve-oil supply is limited. Experience teaches also that valve oil on swabs gives much better results than engine oil.

FAILURE OF METALLIC PACKING.

23. In the event of a rod packing failing when the engine is only a short distance from the end of the run, the best thing to do is to proceed with the train and let the packing blow. If the blow is on the right side, the escaping steam may obstruct the engineer's view somewhat; still if he exercises care and uses good judgment he can get the train in with less delay than would occur if he stopped to fix the packing. However, if it fails some distance from a terminal, something must be done to prevent the packing from blowing. If, fortunately, there are some packing rings in the tool box, take off the gland and replace the worn-out rings; but if no rings are at hand, something else will have to be used to replace the worn-out or broken packing rings. If it is found that one of the packing rings is serviceable, leave it in the vibrating cup, and fill the remaining space with wicking, asbestos, or anything of that nature that is at hand; then replace the gland, and the follower and the spring will keep the packing in place. If it is found that all of the rings are useless, remove them and fill the vibrating cup with wicking or whatever you have at hand. In this event, it is a good plan to use a piece of bell rope in place of the first ring, because it is not as liable to blow out as wicking or other material. If the vibrating cup is broken, it must be taken out and all the space between the cone ring and the follower filled with some kind of fiber packing. Should this ring be broken (which very seldom occurs), let it remain where it is unless all broken to pieces. In that

event take out the pieces, if they have not already come out, and let the vibrating cup butt against the inside of the gland. If the follower ring breaks and gets out of place, all that can be done is to let the spring rest against the packing rings. The above applies to both valve-stem and piston-rod packing. If Harthan's metallic packing is used and the rings become entirely useless, remove the gland and take them all out; then pack the stuffingbox full of fiber packing, bell cord, waste, old overalls, or anything at hand that will serve the purpose, and replace the gland.

24. If the copper gaskets between the gland and the stuffingbox of any style of metallic packing permit the joint to leak very badly, they may be replaced temporarily by a piece of thin rubber packing. Take a piece of thin sheet rubber large enough to make the joint and cut a hole in it as large as the stuffingbox; then cut the rubber so that it can be slipped on over the rod. Loosen the nuts on the gland studs, take out the defective copper gaskets, put the rubber gasket in its place, and tighten the nuts again. In most cases, this will make a good joint.

CARE OF HEADLIGHTS.

25. In some cases headlights have been in use for so many years and have been reduced to such a condition that it is a very difficult matter to obtain anything like satisfactory results from them; still, if they are properly cared for and skilfully handled, even old headlights may be made do fairly satisfactory work. With modern headlights, there is very little excuse for their not giving satisfaction, provided they receive proper care and attention. If the wick is allowed to become too short before being replaced, the lamp may burn all right during the early part of the night, while the reservoir is full of oil, but as the oil gets low the light will grow dim and finally go out. In this event, the quickest way out of the difficulty is to refill the oil reservoir; but a new wick should be put in at the first opportunity. To do this, turn the old wick up as high as it will go and then pull it out. Take the remains of the old wick from the wick holder and put a new one in its place.

To replace a wick, secure the lower end of the wick to the wick holder by sewing or by winding it with thread, being careful to leave no knots. The lower end of the wick should come against the shoulder of the wick holder, which, usually, is about ½ inch from the bottom edge of the holder. If the wick is of canton flannel, it should be wrapped around the holder twice, so as to give about the proper thickness. A piece of writing paper rolled in with the flannel improves the wick, as it prevents the wick from wrinkling, in consequence of which it burns more evenly. The wick should be wound around a small round piece of wood, commonly known as the *wick stick*, or former, to prevent the wick getting wrinkled. Where the wick is made of a felty substance, it is a good plan to first put it on the wick stick and tap it lightly all over before attaching to the wick holder. This will have a tendency to make it thinner and less liable to bind or stick fast when being put into the tube. When putting the wick into place be sure that the ratchet on the lower edge of the holder goes into the proper place, so that the wick can be raised or lowered by means of the cogged wheel. After the wick has been lowered as far as it will go, the portion that remains above the tube can be trimmed off level with a sharp knife, or, if no oil has been put on the wick, it may be burned off with a red-hot flat piece of iron, the latter method being preferable.

A headlight wick should never be turned down to put out the light, as it spoils the wick; always blow out the light.

When the headlight is used regularly every night, the wick should be trimmed daily. To trim a wick, take off the burner and remove the button, then rub off the charred part of the wick with the fingers. To insure a good light, the burned end of the wick must be kept perfectly level.

26. Lampblack will be found a good material for cleaning and polishing the reflector. There are several preparations on the market for doing this work, but they cost considerable money and cannot do the work much better than common lampblack, which is furnished by all railway companies. To clean a reflector, first remove the lamp chimney and burner and

then wipe off the reflector with a piece of clean, dry cotton waste. Saturate a small piece of this waste with kerosene oil, shake some lampblack on it, and rub this over the reflector thoroughly until all the tarnish is removed. A reflector should always be rubbed straight out towards its edge; it never should be rubbed in a circle or around the reflector as so doing affects its reflecting power. Afterwards wipe off the lampblack and oil, and polish the reflector with clean waste and a little dry lampblack.

27. In order to obtain the best results from a headlight it should be turned up as high as possible without smoking. In case the lamp does smoke, the reflector should be taken out and the case thoroughly cleaned out. If it is found that the ventilator at the top is partially stopped up with soot, it may be blown out by means of compressed air, or cleaned out with a stick wrapped around with waste.

It was shown in *Locomotive Boilers*, Part 1, that the function of a lamp chimney is to produce an upward draft of air and deflect it against the flame, in order to furnish a sufficient supply of oxygen to consume all the carbon while it is at a white heat in the flame. Also, it was shown that if by any means the draft is reduced so that sufficient oxygen is not supplied, smoking will result and the light will burn dimly. It thus will be seen that if the air passages of a headlight are allowed to become stopped up, the lamp will smoke and burn poorly. In the headlight, a current of air passes up through the wick tube and supplies oxygen to the inside of the flame, being deflected against it by means of the button. A current of air is also deflected against the outside of the flame by the action of the lamp chimney. If these currents of air are not properly adjusted, the lamp will not burn properly. If the draft holes in the bottom of the case are opened too wide, there will be too great a draft and the flame will burn up too high, especially when running. If the draft holes are opened too little, the light will burn dimly and smoke for want of air. If the wick works down when the engine is running, pack the wick lifter gland a little tighter, so as to make it more solid. If the gland is not constructed so

that it can be repacked readily, use a thicker wick. To guard against the wick working up, first turn it up high after lighting and then lower it until the flame is just right. This trouble is due usually to a wrinkle in the wick, which gradually straightens out, and lengthens the wick after it has been turned up to the proper height. A wick that is too loose will cause the flame to jump up and down when running, and the lamp is liable to smoke.

When replacing a wick, empty the oil that is in the reservoir through the wick tube, so as to clean out any sediment that may be in the oil passage.

Care should be taken to prevent water getting into the oil reservoir, for the reason that the water, being heavier than the oil, sinks to the bottom of the reservoir, and into the tube that leads to the wick holder; the oil will float on this water, which, consequently, will prevent the oil from reaching the wick, and the lamp will go out. In order to guard against this trouble, the kerosene can should always be kept covered so as to prevent snow or water getting into it. Signal oil should never be used in a headlight, for the reason that it will not burn. Kerosene oil only should be used, and the better the quality of the oil, the better the light.

NECESSARY TOOLS FOR LOCOMOTIVES.

28. The conditions existing on the different roads throughout the country are so varied that both the kind and the number of tools to be provided for emergencies must necessarily vary somewhat, and the proper tools to carry, including lamps, etc., in any case, are those called for by the rules and regulations of the road. However, in general practice, it will be found profitable to equip each road engine with the following tools with which to cope with breakdowns and other emergencies: A hard hammer, soft hammer, alligator wrench, 15-inch monkeywrench, setscrew wrench for eccentric setscrews, rod-setscrew wrench, rod-bolt wrench, crankpin nut wrench, and a pedestal-brace bolt wrench. Also, a cold chisel, a cape chisel, an axe, a 5½-foot pinch bar, and a piece of chain about 6 feet long, having a diamond hook at one end. A valve-stem clamp

of suitable design should be provided to hold the valve in mid-position in case the rods have to be taken down. Also, a set of iron blocks to fit on top of driving boxes under the frames, to be used in case of a broken spring or hanger. A 12-inch jack for raising tender journal-boxes, in case it becomes necessary to put in a new brass, or for raising broken axles, etc. Also, it will be found advantageous to supply a couple of wedges 4 or 5 inches square and 3 feet long, guide-bar blocks for blocking the crosshead, and blocks for blocking the links. The tools for firing should consist of a scoop, pick, scraper or hoe, long poker, slash bar, rake, and a bar or wrench for working the grate bars. These tools should have their proper place on the tender and should be kept there when not in use. In addition to the above tools, an engine should be supplied with two spring-valve engine oilers, one wide-mouthed valve-oil can, and a tallow pot in which to warm the valve oil before filling the lubricators; also, one kerosene-oil can, one signal-oil can, one engine-oil can, two torches, the requisite number of torpedoes, one white and one red lantern, four blizzard lamps, two for on front of engine and two for on rear of tender; also, the proper flag signals to be used in day time, namely, two white, four green, and one red flag. A flag box should be provided, in which the flags can be carried and kept clean when not in use. Extra water glasses and lubricator glasses and rubber gaskets for the same should be carried in a safe place, and proper tools provided for replacing a glass in the event of one breaking. A couple of extra tender brasses, with wedges, and one engine-truck brass should be carried also.

MANAGEMENT OF LOCOMOTIVES.

DUTIES OF ENGINEER BEFORE ATTACHING HIS ENGINE TO THE TRAIN.

29. The first thing that an engineer should do when arriving at an engine house, if the pooling system is in vogue, is to ascertain which engine he is to take out; he should then examine the work book to see if any work had been reported on that engine, and must examine the bulletin board to acquaint

himself with any new orders that have been issued since he last saw it.

When the engineer arrives at his engine he should assure himself that the work reported has been properly performed, and then he should determine the amount of water in the boiler and try the water glass and the water-gauge cocks to see if they are in proper working order. The firebox should be examined, also, and the condition of the crown sheet and tube-sheet noticed, as well as the condition of the fire. He should see, also, that the engine is properly supplied with coal, water, and sand, and that the necessary tools, flags, and signal lamps are on the engine. The air pump should be started and the proper pressure pumped up, noting whether the pump governor and feed-valve regulate the pressures properly. Also, he should oil the engine, and, while doing this, should note the condition of the running gear, in order to assure himself that everything is in good order. The oiling should be done just before leaving time, as better results will be obtained than if it is done earlier.

STARTING TRAINS.

30. When the train is ready and the conductor gives the signal to start, the engineer should answer the conductor's signal with two short blasts of the whistle, if he is pulling a freight train, or by ringing the bell if he is pulling a passenger train, unless the rules of the road specify otherwise. After giving the required signal, the engineer should place the reverse lever in full gear in the direction he is to go; then, if the start is at the terminal station and it is permissible, he should open the cylinder cocks to allow the condensation to be worked out of the steam passages and cylinders. The throttle should then be opened sufficiently to start the train without slipping the drivers. As the speed increases, the reverse lever should be gradually hooked up toward the center, until it rests in the proper running notch, and the throttle then opened an amount depending on the speed and weight of the train.

If the train is a very heavy freight, and is hard to start, the slack should first be taken; that is, the cars should be

bunched together so as to compress the drawbar springs and leave no space between the buffers; then, when the engine is started forwards, the cars are started one after the other. This method will enable the engine to start a train that it could not start otherwise. After bunching the slack, care must be taken not to open the throttle in such a way as to start the head end of the train too quickly, as the train may be broken in two. Also, it is important that the slack of the entire train is taken up before starting forwards, since if the slack is taken up on only a part of the train and the rear end is stretched, the train may be snapped in two as soon as the forward movement reaches the stretched portion. Slipping the engine should be avoided, and if the train cannot be started otherwise, the rails may be sparingly sanded.

31. When the engine is not equipped with a pneumatic sander, care should be taken not to open the sand valves wider than is necessary, and as little sand as possible should be used. Should the drivers slip while starting the train, do not use sand to stop their slipping, because it will tend to stop the slipping suddenly, and very severe strains will therefore be thrown on the crankpins and rods. If the engine should slip, first close the throttle sufficiently to stop it, then use sand, and gradually open the throttle. By proceeding in this manner you are not so apt to damage the engine or break the train in two. As the train is slowly set in motion, the engineer and fireman should ascertain, by watching, whether the whole train is coming (some of the couplings may be broken while starting), or whether any signal is given from the rear end to stop. The train should always be run slowly and carefully until all the switches, frogs, and crossings of the yard are passed, and not until then and after the engineer has seen that everything is in order and the train is on the main track, should he increase the speed. Then, as the speed increases, the reverse lever should be hooked back a notch or two at a time until the steam is cut off at the shortest point at which the engine will do its work properly and most economically.

In starting passenger trains, it is necessary to get the train up

to speed quickly, especially in local service when the time is fast and the stops close together. It must be remembered, however, that it is not good policy to work an engine too hard in getting up to speed. The best plan is to make time when the train is up to speed, and also in making the stops.

CLIMBING GRADES.

32. Under the present conditions of railroading, where engines are required to pull a certain number of tons, regardless of the number of cars in the train, it requires good judgment in many cases to get up heavy grades without stalling. If a heavy train has to be started at the bottom of a long, steep grade and taken over the top, it means in most cases that the engine will have to be worked at long cut-off, may be nearly full stroke, all the way up. Of course, if the engine will handle the train with the lever hooked up a few notches, it should be given a chance to do so. If the rails are slippery, sand should be used, but care should be taken not to use too much. If there is a piece of level track or a slight down grade before the hill is reached, the best thing to do is to take a run for it and get up as much speed as possible before striking the grade. In taking a run for a hill, hook the reverse lever well up, and get a good "swing" on the train before reaching the foot of the grade; when the grade is reached, the reverse lever should be dropped down toward the corner a notch or two at a time, as it becomes necessary. Where this plan is adopted, it will usually prove successful. It is poor practice to drop the lever four or five notches at a time, and this practice will often result in stalling, where dropping the lever down gradually would have taken the train up and over the grade.

ECONOMY IN THE USE OF STEAM.

33. The subject of the economical use of steam is an important one, and should receive very careful consideration from enginemen, since an engineer's reputation as an economical runner depends to a great extent on his knowledge of this

subject. In order that an engineer may get the best results from an engine, he must understand how to handle the reverse lever and throttle to the best advantage. There are several methods of increasing or diminishing the power that is being exerted by a locomotive, and the engineer should understand these methods, and, also, which one would be the most economical to use under a given set of conditions. With this knowledge at his command, the engineer's chance of a good position on the Performance Sheet is greatly increased.

34. When an engine is running with wide open throttle, and it becomes necessary to increase the power that is being developed, the reverse lever is dropped a notch or two toward the corner, as needed, until the proper amount of power is being developed. If the engine is running with the throttle partly closed, however, then the power developed can be increased by gradually opening the throttle, and if, when the throttle is wide open, still more power is required, the reverse lever can then be dropped to the proper notch for developing the required amount.

The power that an engine is developing can be diminished either by partly closing the throttle, or by hooking up the reverse lever toward the center notch without touching the throttle. In the first case, the power is diminished by reducing the pressure of the steam by "throttling," the same volume of steam being used in the cylinders, but at a reduced pressure. In the second case, the power is diminished by reducing the volume of steam admitted into the cylinders without reducing the initial pressure. In the second method, the steam is worked more expansively; hence, under most conditions, this method will prove the more economical of the two. This is shown by the results given in the following table. If steam at 200 pounds absolute pressure is admitted to a cylinder for one-third, or 8 inches, of the stroke and is then expanded for the remainder of the stroke, it will exert an average effective pressure of 125 pounds per square inch on the piston; if steam at 140 pounds absolute pressure is admitted for the 24 inches of the stroke it also will exert an average gauge pressure of 125 pounds

per square inch, so that in both cases the steam will do the same amount of work each stroke. In the table, therefore, a comparison is made of the amounts of heat and water used when working an engine at the 8-inch cut-off with steam at 200 pounds pressure absolute, and at the 24-inch cut-off with steam at 140 pounds pressure absolute.

TABLE 1.

1.	2.	3.	4.	5.	6.	7.
Cut-Off. Inches.	Initial Pressure. (Absolute.)	Ratio of Expansion.	M. E. P.	Work Done. Foot-Pounds.	Heat Contained in Steam Used.	Water Used in Doing Work. Pounds.
8	200	3	125	31,800	617.59	.522
24	140	1	125	31,800	1,298.62	1.118

In the table, column 1 shows the cut-off of an engine as working 8 inches in the first case and 24 inches in the second. Column 2 shows the initial absolute pressure of the steam, which is 200 pounds absolute (185 pounds gauge) in the first case, and 140 pounds absolute and 125 pounds gauge in the second case. When working at 8-inch cut-off, the steam is expanded three times, as noted in column 3, whereas the ratio of expansion is 1 when working steam full stroke. Column 4 gives the mean effective pressure in both cases, which is 125 pounds per square inch. Column 5 shows the work done in foot-pounds, which is the same in each case. Column 6 shows the number of heat units contained in the steam that is used each stroke. When steam is used expansively, and is admitted at 200 pounds absolute pressure for only 8 inches of the stroke, it will be seen that 617.59 heat units are used each stroke; whereas, if the steam pressure is cut down to 140 pounds absolute, by the throttle or otherwise, and steam is used for 24 inches of the stroke, the amount of heat used will be more than twice as great, or 1,298.62 heat units. Column 7 shows the amount of water used in each case. When using steam at 200 pounds pressure, and at 8-inch cut-off, .522, or a little over ½ pound, of water is used each stroke; whereas, if steam is

used full stroke at 140 pounds pressure, more than twice the amount is used, or 1.118 pounds each stroke. This table, therefore, shows that in doing the same amount of work, under the conditions named above, only about one-half the heat and one-half the water would be used if working at the 8-inch cut-off than would be if working at the 24-inch cut-off.

There are conditions, however, under which it will be found advantageous to use the throttle rather than the reverse lever to diminish the power exerted, and it is very important that an engineer should know where to use one method and where to use the other.

35. Both experience and experiments show that considerable more work can be done with a given amount of steam if it is used **expansively** than if it is not. The expansive property of steam is capable of doing work, and if it is not fully made

TABLE 2.

1.	2.	3.	4.	5.	6.	7.	8.	9.	10.
Quantity of Steam Used in Pounds.	Initial Pressure. (Absolute.)	Ratio of Expansion.	Pressure After Expansion. (Absolute.)	M. E. P.	Work Done. (Foot-Pounds.)	Total Heat Contained. Heat Units at 200 Lb. Pressure.	Heat Contained at Final Pressure.	Heat in Heat Units Saved.	Comparison of Work Done.
1.566	200	1	200	185	47,064	1,832.751	1,832.751	0	1
1.566	200	2	100	155	78,864	1,832.751	1,806.954	25.797	1.67
1.566	200	3	66	125	95,400	1,832.751	1,793.206	39.545	2.02
1.566	200	4	50	105	106,848	1,832.751	1,774.637	58.114	2.27

use of, that is, if the steam is not allowed to expand and do work, this expansive energy is wasted. Just why it is more economical to work steam expansively will be seen more clearly by comparing the total heat contained in a given quantity of steam used expansively and the amount of work that the steam will do in the cylinder, with the total heat and the amount of work done by the same quantity of steam that is not

used expansively. This comparison is made in Table 2, in which we compare the quantity of heat used and the amount of work done by the same amounts of steam when expanded one, two, three, and four times, respectively. In the table, column 1 gives the quantity of steam used in pounds, which is the same in all cases. Column 2 shows the initial pressure to be 200 pounds absolute pressure. Column 3 shows the ratios of expansion. Column 4 gives the pressure after expansion or at the end of the stroke. Column 5 shows the mean effective pressure exerted on the piston in each case; that is, the average effective pressure throughout the stroke. Column 6 shows the work done in foot-pounds. Column 7 gives the total heat contained in the steam at 200 pounds pressure, which, of course, is the same in all cases. Column 8 shows the amount of heat contained in the steam at the final pressure. Column 9 shows the amount of heat saved by expanding the steam. The quantities in this column are obtained by subtracting the quantities in column 8 from 1,832.751, the amount of heat in 1.566 pounds of steam before expansion. Column 10 shows the comparison of the amounts of work done with the same quantity of steam under different ratios of expansion.

Comparing column 3 with column 8, it will be seen that when the ratio of expansion is 1, the amount of heat contained in the steam when it is exhausted to the atmosphere is 1,832.751 heat units, which is the same amount as is contained in the steam before expansion; hence, all heat would be discharged to the atmosphere, and there would be no saving (see column 9). When the steam is expanded twice, the pressure will be reduced to 100 pounds absolute at the time the exhaust opens, and the heat then contained in the steam will be 1,806.954 heat units, which will be a saving of 25.797 heat units (see column 9). When steam is expanded three times, the final absolute pressure will be 66 pounds per square inch, and the heat contained in the steam at exhaust will be 1,793.206 heat units; hence, 39.545 heat units will be saved, since it was made do work in the cylinder. With a ratio of expansion of 4, the pressure in the cylinder just before exhaust occurs will be 50 pounds per square inch absolute, and the amount of heat then contained

in the steam will be 1,774.637 heat units, and there will be a saving of 58.114 heat units that were made do work in the cylinder. The amount of work done under the different ratios of expansion will be seen in column 6, while column 10 shows that if we take as unity the amount of work performed by the steam when the ratio of expansion is 1, the amount of work done by the steam when the ratio of expansion is 2 will be 1.67 times as great; the amount of work done by the steam when the ratio of expansion is 3, will be 2.02 times as great; while the work done when the ratio of expansion is 4, will be 2.27 times as great. The table shows, therefore, that the more steam is expanded, the greater will be the amount of its heat used in doing useful work, and the greater will be the amount of work the steam will perform.

Both experience and experiments prove this to be true up to a certain point, and it has been found that great saving is effected by using steam expansively; however, as the ratio of expansion is increased beyond a certain point, it is found that the economy decreases greatly, and if carried to excess, expansion will prove more wasteful than non-expansion. This is due to the fact that condensation increases very rapidly in the cylinders at very short cut-offs.

36. That it is always economical to work steam expansively has been fully established, and there is no doubt on that score; just how far to expand the steam, however, is the point that must be considered and decided by the engineer when he gets an engine. The point at which steam should be expanded to obtain the greatest economy may not be the same in any two engines and may vary somewhat with the speed, and it must be determined for each engine. For example, the 6-inch cut-off may be the most economical for one engine while the 8-inch may be for another, and it is only by trial and careful observation that the most economical point of cut-off can be determined. A good plan to follow in the use of the reverse lever and throttle is as follows: After starting the train, open the throttle wide and handle the engine by means of the reverse lever until the lever is cut back to the notch that

experience shows gives greatest economy for the speed; then, if necessary to further decrease the power being exerted by the locomotive, reduce the power by partly closing the throttle. In other words, keep the throttle wide open and handle the train by means of the reverse lever as long as it is below the notch that gives the greatest economy for the speed and weight of train; but when it is in the notch that gives the greatest economy, handle the train by means of the throttle. Also, it will be found good practice to always carry the reverse lever as near to the notch of greatest economy as possible and still handle the train at the proper speed, for the more the steam can be expanded below that point, the greater will be the resulting saving. By this method of handling the reverse lever and the throttle, the greatest economy can be obtained. However, the point or notch that will show the greatest economy must be determined for each engine, and if an engineer handles the same engine for any length of time he will soon determine the best point of cut-off.

In the pooling system, an engineer may not have the same engine twice in several weeks, so that it is a difficult matter to determine the cut-off of greatest economy. As a rule, for the faster speeds it will probably be found in simple engines between the 8-inch and 6-inch cut-offs, but is seldom, if ever, above the 6-inch cut-off. When taking a strange engine, then, probably the best plan of procedure will be to carry a wide-open throttle and handle the train by the reverse lever at fast speeds as long as the reverse lever is at or below the 8-inch cut-off, and if it becomes necessary to reduce the power that is being developed, with the reverse lever in the 8-inch cut-off, partially close the throttle.

In determining the positions in which the reverse lever and throttle are to be carried, the engineer must take into consideration the speed and weight of the train, the profile of the road, and the steaming qualities of the engine, and their positions therefore must depend on his judgment. He should bear in mind, however, that the best results will be obtained by working the steam as expansively as is possible under the conditions.

APPROACHING STATIONS.

37. When approaching stations where stops are to be made, the engineer should take into consideration the nature of the grades and other conditions when calculating on the stops, and should shut off steam far enough from the station to permit the train being brought to a standstill at the proper point by means of an ordinary application of the brakes. The practice of running into stations at a high rate of speed, and stopping at the right place by applying the brakes to their full capacity, is a risky one. On some fast trains it may be necessary to run at high speed as close as possible to the station, in order to make the time, but ordinarily it is not advisable.

As a train approaches a station at which it is not timed to stop, the speed, in most cases, should be reduced and a sharp lookout kept for signals, etc. that may be displayed. At stations where semaphores are provided, all trains should be prepared to stop in the event of the signal being against them.

38. The whistle should be blown at the prescribed distance from the station, usually at the whistle-signal board, and the fire should be allowed to burn down a little before the throttle is closed, so as to prevent steam from escaping at the pop-valve. Also, as soon as the throttle is closed, the dampers should be shut, if necessary, to prevent popping. A fresh fire should not be put in engines burning soft coal just before the engine is shut off, as it is not needed then, and a large cloud of black smoke will be made.

If the approach to the station is made through a town, the bell should be rung continuously to warn persons that may have occasion to cross the tracks that a train is approaching.

39. On freight trains where stops are made by means of the hand-brakes, good judgment must be exercised in determining the point at which to shut off steam. This should be done early enough to give the brakemen a chance to stop the train at the proper point. Many railway companies have special rules that allow freight trains to run past stations and through yards at a speed of only 6 or 8 miles per hour; passenger trains are usually not affected by such rules.

When the throttle valve is closed and the engine is drifting, the reverse lever should always be moved toward full gear in whichever direction the engine is running.

MAKING STOPS.

40. On some runs where the time is fast and the stops close together, advantage must be taken of every second in order to make the time; hence, an engineer should keep a sharp eye on the time consumed in stopping and starting the train. In order to make time in stopping and starting a passenger train, the engineer should carefully study the conditions that govern the smooth handling of a train, and he should also be able to judge the distance in which he can stop his train from different speeds and with any number of cars he is liable to have in ordinary passenger trains. As a rule, an engineer has a landmark for shutting off his throttle. This mark should be as close to the stopping point as he can make it, and still leave space enough to bring his train safely to a standstill with all the smoothness possible. Always remember that it is much easier to make time when the engine is working at short cut-off and the train is up to speed than when starting, so for that reason you should keep the speed up as long as it is possible. Of course, you may start as rapidly as possible, but in so doing it is well to remember that time cannot be made by running the engine in the corner at full stroke. Always cut the engine back soon after starting, say after a few revolutions, and then continue to cut back as the speed increases. Conditions such as grades, the number of cars in the train, etc. govern the rapidity with which the reverse lever should be cut back. Also, it is well to have a high steam pressure for starting, and an engine should have every advantage possible in starting a heavy train, in order to keep up the steam pressure.

In order to make a quick stop with a passenger train, the two-application method can be used to advantage. The first application should be a heavy one, because at that time the speed is high and the shoe friction low; consequently, the brakes will not hold as well as at low speeds, and there will be

no danger of the wheels sliding. The first application should be held on until the speed is reduced to about 15 or 16 miles an hour, below which speed there is a liability of the wheels sliding. The brakes should then be released and the train brought to a stop by making a lighter application, releasing just before the train comes to a standstill.

USE OF SAND.

41. The use of sand is a subject that requires careful consideration on the part of the engineer. The use of sand to assist in stopping trains has been dealt with previously, therefore, the proper and improper methods of using sand to prevent the engine slipping will now be considered. At the present time it is a common thing to see engines loaded down to their maximum capacity; hence, in order to take such trains over the road, sand must frequently be used. Before beginning a trip, an engineer should know that the sand box on his engine is filled and that the sanding device, whether air or lever, is in working order. The pipes should be clear and in position to carry the sand to the top of the rail. When necessary to use sand in starting a train, it should be used in quantities just sufficient to prevent the engine slipping, and as soon as the train is in motion and the engine will handle it without danger of slipping, the use of sand should be discontinued. Under ordinary conditions, a train can be started and brought to speed without the use of sand, but with heavy trains it is often advisable to use it. When such conditions exist, the sand may be applied by dropping a little every two or three revolutions of the driving wheels. Of course, the condition of the rails and the weight of the train must be taken into consideration, and the sand must be used with judgment, as no hard-and-fixed rule can be given that will cover all conditions. A good rule to follow is to use sand as seldom as possible, and then to use only enough to prevent slipping. Sand increases the *grip* of the drivers on the rails, but it must be remembered that it also greatly increases the rolling friction; hence, sand makes a train pull much harder than it would on bare rails, and the

more sand used the greater is the retarding effect. - This point is of special importance in heavy freight service on grades. Again, when sand is used too freely, it is apt to work into the bearings, causing them to heat.

42. In climbing a grade with a heavy freight train, it is important that slipping be prevented, especially when the engine is laboring hard at slow speed, for to slip at such times will probably mean to stall the train before the drivers catch the rail again.

In the event of the engine slipping, sand should never be dropped on the rail until after the throttle has first been closed sufficiently to stop the slipping, as otherwise serious damage may result. First close the throttle, drop the sand, and then open the throttle again. Sand should never be used on one side only, but should always be dropped on both sides at the same instant. When used on one side only, the axles are subjected to a severe twisting strain that may result in bent or broken rods or pins.

On a foggy day, or when a rail is slippery from other reasons, it is good practice to drop just a little sand on the rails frequently enough to keep the tires dry, and thus prevent slipping. The most important thing to remember in connection with this subject, however, is to exercise good judgment in the amount used and in the conditions under which it is used.

RUNNING ENGINES IN COLD WEATHER.

43. When running an engine in cold weather, certain precautions must be observed that are not necessary at other times. For instance, care must be exercised in starting and stopping trains during very cold weather, in order to prevent drawbars being broken, since, when full of frost, drawbars snap off very easily. Trouble also occurs through the injector pipes freezing. One injector is generally all that is used to supply the boiler with water, and in cold weather the pipes of the other injector will freeze very quickly if some means is not adopted to prevent their doing so. It is necessary, therefore, to keep steam circulating through the pipes during the time the injector is not

working, which may be done by closing the overflow valve, and opening the steam valve sufficiently to permit a small quantity of steam to blow back through the injector, feedpipes, and hose into the tank. The frost cock on the discharge pipe should also be opened so as to permit steam to flow through this pipe and thus keep it from freezing. A pipe should lead from the frost cock to a point near the track so that the steam and water passing through it will not be blown over the engine and cover it with ice.

Care must be taken that too much steam is not forced back into the tank, since there is danger of overheating the water, in which event the injectors will not work. In extremely cold weather, the suction pipe of the injector that is working will sometimes partially freeze and thus deliver an insufficient supply of water to the boiler. In this case, close the overflow valve, and blow steam back through the suction pipe to thaw out the ice. The best way to use the "heater" on a lifting injector is to almost close the steam-supply valve at the boiler, pull the operating handle wide open, and close the overflow valve.

If an engine equipped with steam heaters is connected to a train without steam-heating apparatus, or is disconnected from a train entirely, a little steam should be constantly blown through the heating system to keep it from freezing.

The air-pump steam supply must never be shut off entirely for any great length of time, and the reservoirs, drain cups, and other parts of the air-brake apparatus in which water is liable to accumulate, should be regularly drained.

TAKING A "LIGHT" ENGINE OVER THE ROAD.

44. When called upon to run "light," and a pilot is not furnished, it must be remembered that the man in charge of the engine is conductor as well as engineer, and consequently he must, in addition to his ordinary duties, check up the train register and apply to the train dispatcher for orders; after receiving the orders he may proceed. If the engine fails on the road, the engineer must see that he is properly protected.

In many cases, engines after having been in the shop for general repairs are run light to the division to which they are assigned; the engineer in charge must then be very careful, during the first fifty or one hundred miles of the trip, to see that none of the bearings get hot, which they are very liable to do.

HOT BEARINGS.

45. A **hot bearing** is one of the most annoying difficulties with which an engineer has to contend. When a bearing shows signs of heating, it should be carefully watched and everything possible done to prevent its becoming hot; for, if it becomes hot enough to smoke or set fire to the packing, the question of getting over the road and making time becomes a serious one, especially on important fast trains. On local runs, where stops are made at every station, there is usually sufficient time for the engineer to occasionally look around the engine; in such cases, he may find the bearing while it is warming up, and should then take steps to prevent its becoming hot. On fast trains, however, where long runs are made, with but few stops, the chances of hot bearings become greater; usually, in this case, the first hint that the enginemen have that some part of the engine is warming up is when they smell the hot box, or bearing, or whatever it may be. In that event, if the engine is so piped as to permit it, water should be turned on the hot bearing for the remainder of the run, when the trouble should be reported so that the parts giving trouble can be properly cared for.

Whenever a bearing begins to get hot, and it can be done at the time, the oil supply should be increased, and if it is a tender truck, engine truck, or driving journal, the box should be examined at the first opportunity and packed, if time permits. If it is found that the packing has settled away from the journal, it is reasonable to assume that the trouble has been found, and in this case repacking the cellar will effect a cure.

46. Using Water on Hot Bearings.—Many engines are now equipped with pipes so arranged that water can be applied to almost all the crankpins and journals while the

engine is running. On important trains, where delay means missing connections, water, if properly handled, can be used on hot bearings to advantage in order to get the train in on time. If a bearing shows signs of heating, the best thing to do is to examine it to see if anything is broken, and then turn on a sufficiently large stream of water to prevent its getting hotter. This will generally keep the journal in condition to run without serious trouble. If the bearing is very hot and the waste is on fire, the stream of water will likely put out the fire at once, and keep the bearing from being damaged until the terminal is reached.

If the bearing is very hot and no water pipes are provided, it must be treated differently. If the packing is burning, just throw sufficient water on to put out the fire; then, removing the old waste, and all the water possible, pack the box, or cellar, with new oily waste. It is a very poor plan to cool off a very hot journal with water while the engine is standing. A journal that runs hot and is cooled with water every time the engine stops is almost sure to break before long.

The consensus of opinion is that in cases of emergency, cold water may be used on hot bearings as a temporary relief in order to bring the train in on time; but, at the earliest opportunity, attention should be given the troublesome bearing at the shops so that the use of water may be discontinued. It is also advisable to have pipes so arranged that the water can be admitted to the cellar and near the back of the journal; but when no such provisions have been made, the best place to apply it is between the box and the wheel hub.

47. A hot driving box, on an engine having spring saddles and springs over the boxes, can be relieved by fitting a block between the under side of the spring saddle and the upper side of the frame; by this means, when the engine is running, the block will keep some of the weight off that box. If the box continues to run very hot, and sticks on the wedges, slacking off the wedges may help matters; if not, the wheel may be run up on a wedge and a thicker block put between the top of the frame and the spring saddle to take more weight off the hot box.

Fresh packing can often be put into a driving-box or engine-truck cellar without letting down the cellar by using a thin packing iron and small quantities of packing at a time. Thin slices of hard soap shoved in beneath a hot journal will often work wonders. A little graphite, also, has a good effect on anything that is running hot.

If a tender box runs hot after the usual cures have been applied and there is a spare brass on the engine, replacing the old brass may remedy the trouble.

48. Main-rod brasses sometimes run hot on account of the rod having a twist; that is, the holes through the brasses at each end of the rod are not true with each other, and, consequently, when keyed up snug, they bind on the pins. The crosshead-pin bearing may be out of true, causing the main-pin bearing to run hot. In such a case, slack off the key in this crosshead end and see if it frees the other end of the rod. This is a common cause of a hot main pin. Also, brasses are sometimes fitted on the pins in such a manner that they can be, and often are, keyed too tight. In such cases, the keys should be slackened off enough to insure the brasses having sufficient play to prevent heating. New main-pin brasses that are fitted closely in the straps expand more than the straps when they get heated and pinch on the pins, so they are sure to damage both brass and pin.

If a crankpin begins to heat up, the oil-cup cover should be taken off to make sure that there is enough oil in the cup and that the oil passages are not stopped up with dirt or some foreign substance. If the cup is fitted with a plunger, or needle, the feed should be examined to see that it is working freely and has the proper amount of lift. The amount of oil fed by the majority of rod cups can be increased by slacking off the locknut on the top of the cup, screwing out the adjusting screw a small amount, and then tightening up the locknut again.

When crankpins run so hot that oil will not remain in the cups for any length of time, the following treatment will prove beneficial: Having filled the oil hole in the strap with yellow-soap shavings or graphite and poured in a little valve oil,

replace the oil cup and fill it with this oil. If it is fed from a cup forged solid on the rod, remove the oil-cup cap and feeder, and force some fine soap shavings or graphite down to the pin; then, having filled this hole with valve oil, replace the feeder and its cap.

In cases where the brasses are babbitted and they get hot enough to melt it, do not stop until the babbitt is all thrown out, as the oil way is liable to be full of the hot metal, and, if allowed to cool, will give lots of trouble.

If an eccentric gets hot on account of the straps being too tight on the cam, it may be relieved by loosening the nuts on the bolts that go through the lugs, and putting some pieces of tin, pasteboard, thin pieces of wood, or anything else that will serve the purpose, in the joint between the two halves of the strap; then tighten the nuts again. If an eccentric gets hot and the strap is loose on the cam, it will be necessary to examine the oil hole, and if found stopped up, it will have to be cleaned out. A little valve oil applied to a hot eccentric is about the best remedy known. Sometimes an eccentric gets hot because the valves are insufficiently lubricated. The remedy for this is obvious. Never use water on a hot eccentric strap, as in most cases they are made of cast iron and are liable to break under such treatment.

If guides get hot on account of being closed too tight, loosen the nuts on the bolts at each end and put in a thin liner of paper or tin between the guide blocks and the guides; then retighten the nuts. Never cool off hot guides with water, as they are liable to spring or warp to such an extent as to ruin them.

INJECTORS FAIL ON THE ROAD.

49. When an engineer finds that his injectors fail to supply water to the boiler for some reason or other, he should immediately try to find the cause. If his efforts to start the injector fail, he should stop the engine in time to prevent the water getting so low in the boiler as to require knocking out the fire; also, the dampers should be closed, and, if necessary, the fire dampened by covering it over heavily with fine wet coal, so that the boiler will not blow off and waste water.

Ordinarily, the injector on the right side is used to the exclusion of the one on the left; and, as a consequence, the left injector soon becomes incrusted with lime or scale to such an extent that it will not work. In that event, the failure of the right injector on the road means that the engineer has lost the use of both injectors. This trouble may be avoided by using the left injector every day, or, at least, sufficiently to keep it in working order. A good plan is to use the left injector while feeding before going out on the road, while stopping at stations, and at other times when the engine is standing still; using the right injector only while running. Another plan is to use the injectors alternately. By this means both injectors will be kept in good working order, and should one fail on the road, the other one is in condition to be used.

In the event of both the injectors failing to work, first ascertain if there is sufficient water in the tank; or, if the weather is cold, whether the manhole has been frozen over, thus making the water tank air-tight. Neither of these being the cause, the trouble may be due to the strainer becoming clogged; in this case, steam should be forced back through the suction pipe by closing the overflow valve from the injector and opening the steam valve. This may force out the obstructions in the strainer, and the injector will readily raise water again. Should the result not be favorable, take the hose down and clean the strainer. Then examine the hose, and if water will run through the hose, flow steam back through the suction pipe to be sure that there is no stoppage. Then couple up the hose and again try to raise water. The trouble may be due to one of the defects mentioned in *Locomotive Boilers*, Part 2, in which case proceed in accordance with the instructions there given.

In most cases, if there is sufficient water in the tank and the tank valve is open, the injector will start after steam is blown back into the tank so as to blow any obstruction out of the strainer or hose, and this remedy should be the one first tried whenever the injector fails to start. If, while trying to start the injector, the water in the boiler becomes so low as to endanger the crown sheet, it will be necessary either to bank the fire with green coal so heavily that it will protect the crown

sheet, especially with the fire-door open, or else draw the fire. Should it become necessary to draw the fire in cold weather, care should be taken to thoroughly drain all pipes, etc. of water, to prevent damage through freezing. All drain cocks and drain plugs should be left open, the boiler and tank emptied, and the suction hose disconnected; also, the siphon pipe to the steam gauge should be disconnected and the siphon emptied. The sight-feed lubricator should be drained. In fact, the boiler and all boiler fittings should be drained of all water to prevent possible injury through freezing. The engine should then be disconnected and made ready to be towed in. When an engine is disconnected it is greatly out of balance, so that it is not safe to haul it at high speeds. The maximum safe speed for an engine in this condition is about 20 miles per hour. In 1899, a disconnected engine on the Wabash Railroad, having 56-inch drivers, was hauled at a speed of 40 miles per hour on 63-pound rails; afterwards, it was found that 10 rails were broken, while 772 rails were badly surface bent by the blows of the unbalanced drivers.

THROTTLE OR DRY-PIPE LEAKING.

50. A leaky throttle or dry pipe will be indicated by steam escaping from the cylinder cocks when the throttle is closed; but, if steam does escape from the cylinder cocks under those conditions, the engineer should be sure that the steam valve to the lubricator is closed before he decides where the trouble lies, because the steam may be entering through the oil pipes instead of through a leak. The condition of the steam as it escapes through the cylinder cocks will help one judge whether the trouble is in the throttle or in the steam pipe.

In the event of the throttle leaking, there will be a constant flow of dry steam to the cylinders; but if the dry pipe leaks, there will probably be more or less water carried with the steam, depending on what part of the dry pipe contains the leak. If the dry pipe lies up near the shell of the boiler and the leak occurs in the top of the pipe, the steam leaking through will be dry, and the boiler will have to be rather full of water before wet steam will show at the cylinder cocks with the engine

standing. With the leak in the under side of pipe, however, water will leak to the cylinders when the water is carried high in the boiler.

POUNDS.

51. Causes and Remedies.—A pound in an engine is destructive to the engine, besides being a great source of annoyance to the engineer, and if it is of such nature that it can be remedied, this should be done as soon as possible. A common cause of an engine pounding is worn main-rod brasses, which cause a sharp pound as the main pin passes the centers.

Loose wedges in the driving-box jaws cause a pounding that should be located and remedied as soon as possible, as there is danger of breaking the driving boxes. To locate such a pound, place the engine on the top quarter, block the driving wheels, put the reverse lever in the corner, and admit a little steam to the cylinder. Work the lever back and forth, and the action of the steam in the cylinder, as it is being shifted from one end of the cylinder to the other, will cause the boxes to be worked back and forth in their pedestal jaws, if there is enough play there to cause pounding. This method will also locate loose or broken driving-box brasses.

If there is too much play between the guide bars, the crossheads will cause a very disagreeable pound when the engine is working hard at slow speeds, and, also, there will be a tendency to bend the piston rods. This pound should be stopped either by closing the guide bars the proper amount or by lining out the crosshead gibs, or retinning them, as the practice may be.

A piston loose on the piston rod, or the rod loose in the crosshead, causes a severe pound, and sometimes the piston works off far enough to knock out the front cylinder head. The remedy for this defect is obvious.

Worn side-rod brasses are liable to cause a pound; if they are very loose their side motion will cause them to rattle badly.

If the main rod has been lined out too long, it will allow the piston to strike the front cylinder head; or, if lined out too short, it will strike the back head. In either case, a bad pound will result when the main pin passes the front or back center,

respectively. This pound can be easily located, when the throttle is closed and the engine is drifting, by noting on which center the pound occurs. Another way is to note on which end of the guides the crosshead overtravels the travel marks. If the crosshead passes the marks on the back end of the guides, the main rod is too short and should be lengthened by changing the liners from the back to the front side of the main-pin brasses. If the crosshead passes the marks on the front end of the guides, the rod is too long and should be shortened by taking the liners from in front of the brass and placing them back of it, in this way dividing the crosshead travel equally between the travel marks.

Badly worn expansion pads on the boiler will cause a bad pound when the engine is working slow and hard, as they allow the back end of the boiler to work sidewise on the frame. If this working is allowed to continue for any length of time, the bolts through the cylinder and smokebox will become loose and cause the steam-pipe joints to leak.

A cylinder that is loose on the frame, or a broken frame, will cause a pound that will jar the whole engine. Both of these defects are serious and demand great care in getting the engine over the road. If this pound begins while pulling an unimportant train, side track the train; but if a first-class train, endeavor to take the train to the nearest place where the engine can be exchanged for another. The disabled engine should be run to the shop light. A loose driving-box brass will produce a bad pound that sometimes is difficult to locate.

In trying to locate pounds and their causes, it is a good plan to place the crankpin on the top quarter on the side you wish to test, then block the wheels, and, admitting a little steam into the cylinders, work the reverse lever back and forth. By closely watching each connection in turn as the piston causes a pull or a thrust to the crosshead, the cause of pounding can be very easily located. If possible, an engine having a very serious pound should not be run, especially if the pound is inside of the cylinder; since, in this case, it is a certain indication of a defect that sooner or later will end in a breakdown.

CYLINDERS GROANING.

52. Cylinders that have been run some distance without sufficient lubrication, and, also, in many cases, where the packing rings have been allowed to run until the corners wear sharp, often groan so badly as to make one think that they are being torn to pieces. This groaning, if due to insufficient lubrication, can generally be stopped very quickly by giving both cylinders about a tablespoonful of valve oil, or a little dry graphite, through the relief valves. If, after introducing the oil, the cylinders continue to groan, the trouble is in the packing rings, in which case they should be taken out in the shop and the sharp corners filed off. When this has been done, the groaning will probably cease.

BLOWS.

53. Causes of Blows.—Listening to an engine continually blowing is most annoying to the engineer, and, besides, the blow is costly to the company. Sometimes the blow may not be very serious, but, nevertheless, it is a waste of steam, and wasted steam means wasted fuel. Through a desire to make a good showing of economy in the amount of valve oil used, the supply is sometimes cut down to so small a quantity that it is impossible for an engine to be run on the allowance without the valve seats and cylinder packing becoming cut or worn in a short time; the result is that many times the value of the valve oil saved passes away as wasted steam. However, while limiting the supply of valve oil may eventually lead to a blow, it is not the only cause of this trouble. Valves that have not been properly fitted on their seats, badly fitted balance strips, broken springs under the strips, balance strips stuck down, broken cylinder packing rings, cylinder packing rings that have become so worn by long use as to become too small for the cylinder, rings that have worked around so that the joint is at the top or side of the cylinder, broken valves, broken seats, etc. are one and all likely to be met with at any time, and invariably cause the engine to blow.

54. Testing for Blows.—When it is found that an engine blows, tests should be made to ascertain, if possible, where the trouble lies. A broken valve may cause a steady blow; just how hard depends on how badly the valve is broken. The test for a broken valve is given in Art. **25**, *Breakdowns.*

That part of the valve seat that most frequently breaks is the bridge, thus causing a heavy, though not constant, blow. The test for a broken bridge is given in Art. **23**, *Breakdowns.*

55. Sometimes, when an engine having balanced valves is given steam after having drifted down a long hill, there will be quite a strong, constant blow. This is caused by one of the strips of the valve getting stuck down, the spring beneath it probably not having sufficient strength to raise it because there is considerable gummy substance on the strip.

As a rule, a blow from a valve is more steady than is a cylinder-packing blow. Cylinder packing blows hardest during the first half of the stroke. To test for a valve blowing, place the engine on the top quarter and put the reverse lever in mid-gear. This position will bring the valve over the center of the seat, and if the valve is tight there will be no blow. Open the cylinder cocks and if steam blows through them, it shows that there is a leak between the valve and its seat. If steam shows at the front cylinder cock, it indicates that there is a leak into the front port; if at the back cylinder cock, the leak is into the back port. If the strips are blowing, the steam will go directly into the exhaust cavity and out at the exhaust pipe. Now, if the valve has inside clearance, steam will also show at both cylinder cocks, while if there is no clearance and the reverse lever is moved ahead slightly, so as to connect the exhaust cavity with the front steam passage, without uncovering the back steam passage, steam will show at the front cylinder cock; if the lever is moved backwards, so as to connect the exhaust cavity with the back steam passage, steam will show at the back cylinder cock. The other side may be tested in the same way. If the valves are tight, test the cylinder packing by placing the side of the engine to be tested on the forward bottom eighth, block the wheels, or set the brake, open the cylinder cocks, and

drop the reverse lever in the forward corner; then open the throttle, and if the steam blows through the back cylinder cock as well as through the front one, the cylinder packing is blowing. The engine may be placed in several positions and tried for piston blows. If steam blows out of the cylinder cock at the opposite end of the cylinder to where it is admitted, it usually denotes leaky cylinder packing. A good idea of the condition of the pistons can be formed by leaving the cylinder cocks open when starting a train and closely watching the flow of steam from them.

If the packing rings are broken and the piston blows badly, it will weaken the exhaust on that side of the engine, especially if the engine is worked slowly. If the piston packing is worn slightly smaller than the cylinder, it may blow some when the engine is working light or at short cut-off; but when the engine is working hard and at long cut-off, there may be no blow. This is due to the fact that when the engine is working hard and at long cut-off, there will be sufficient steam pressure behind the packing rings during the whole length of the stroke to hold them out against the walls of the cylinder and make a tight joint during the full stroke. When working the engine with short cut-off, the pressure at the end of the stroke may not be sufficient to do this, and the piston will then blow during the latter part of the stroke. From this it will be seen that it is best to try the piston packing when the steam pressure is low.

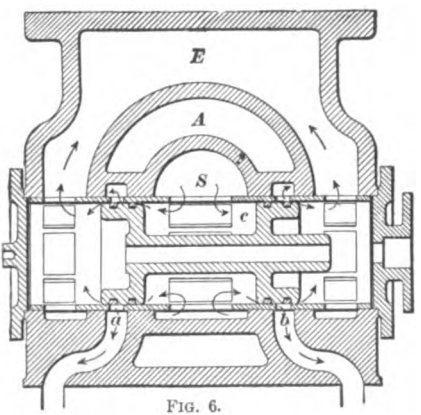

FIG. 6.

56. Test for Blow in Piston Valve.—To test for a blow through the rings of a piston valve, place the valve in mid-position, as shown in Fig. 6, so as to cover the steam

passages leading to the two ends of the cylinder. With this piston valve, steam is admitted to the chamber *S*, and the cavity *c* of the valve is filled with steam as long as the throttle is open; consequently, if the packing rings are broken or badly worn, or if the bush is badly worn, steam will blow between the rings and the bush into the exhaust passage *E* and then out, as shown by the arrows, thus causing a blow. Also, steam will pass the packing rings into the steam passages *a* and *b*, thence into the two ends of the cylinder, and will show at the cylinder cocks, provided they are open.

If the rings in one end, say the front end of the valve, give out, it will cause a continuous blow through the exhaust, the sound of which, as the engine is running along, will, of course, be loudest between the regular exhausts of the engine.

A loose valve bushing, also, will allow steam to blow between the cylinder casting and the bush, and thence out through the exhaust, causing a continuous blow that will be difficult to distinguish from a bad valve blow.

A BROKEN STEAM CHEST, THE CAUSE AND PREVENTATIVE.

57. Burst steam chests are generally the result of reversing the engine when the throttle is closed tight and the engine is running at high speed. When an engine is reversed while running, the cylinders are converted into air compressors, drawing the hot gases into the cylinders from the smokebox and compressing them into the steam chests, steam pipes, and dry pipes. Of course, with the throttle closed, the gases cannot escape into the boiler through the throttle, and the pressure, consequently, accumulates rapidly to such an extent that the weakest parts, usually the steam chests, give way. To prevent breaking the steam chests, if it becomes necessary to reverse the engine while running at a high rate of speed, open the throttle as soon as the engine is reversed, so as to allow the pressure accumulated in the steam chests to escape into the boiler. It will then be impossible to get more than boiler pressure in the steam chests, since the pop-valves will take care of the pressure in the boiler; and as the steam chests are designed to carry

boiler pressure, they will not break. Another method for preventing excessive steam-chest pressure, which is used quite extensively on many roads, consists in using a combined vacuum-and-pressure valve similar in principle to that shown in Fig. 16, *Compound Locomotives.*

EXHAUST OUT OF SQUARE.

58. There are many causes that may have the effect of making the exhaust sound "lame." One of the most common causes, especially with engines having long, crooked eccentric rods, is that one or both of the valves become dry. When the valves get dry for want of oil, they move much harder than usual and cause the rods to spring sufficiently to make the exhaust sound out of square. Increasing the oil supply, or partly closing the throttle for an instant, will, in most cases, overcome the difficulty. Other causes are, a bent rocker arm, lifting arm, or loose rocker boxes. Also, if the tumbling shaft is sprung, it will allow one link to hang lower than the other, and whichever side the low link is on will have the heaviest exhaust while the engine is running forwards, and the lightest exhaust when the engine is backing up.

Eccentric rods are usually fastened to the eccentric straps by bolts passing through slotted holes. If these bolts loosen and allow the rod to move, it will affect the sound of the exhaust. If the rod slips a short distance and then catches again, there will be one heavy and one light exhaust on that side; but if the bolts are very loose, the exhaust will be irregular. Slipped eccentrics, or loose strap bolts, also cause the exhaust to sound out of square; but at the present time, on the majority of railroads, the eccentrics are keyed on the axle so well that they seldom slip. A bent eccentric rod will cause one heavy and one light exhaust on that side.

On engines having double-exhaust nozzles, one of the tips sometimes becomes gummed up more than the other, which will have the effect of making the engine sound lame. The beats may be square, but the exhaust coming through the gummed nozzle will be sharper than the others.

59. If the high-pressure cylinder packing is blowing on one side of a Vauclain compound, it will cause the exhausts on that side to be heavier than on the other. The reason is this: The steam that blows past the high-pressure piston goes into the low-pressure cylinder and increases the pressure there, and, as a result, the final exhaust is stronger.

A valve yoke will sometimes break in such a manner as to make the exhaust very badly out of square when the lever is hooked up, but it will not be nearly so bad when working in full gear.

FAILURE OF SPARK-ARRESTING DEVICES OR ASH-PAN.

60. In cases where the spark-arresting arrangement, such as cones, nettings, etc., gets into a condition that permits fire to be thrown out to a dangerous extent, care must be exercised to prevent setting fire to properties along the route. For this reason the engine should be worked as light as possible when passing through towns or other places where a fire may be started. The throwing of sparks can be prevented, to some extent, by keeping the firebox door partly opened, as there will then be less air passing through the fire, and, hence, less liability of throwing out hot cinders. In the event of the spark-arresting device failing, it will be well to choose places for shaking the grates where no danger is apt to be caused by live sparks.

If a hole makes its appearance in the ash-pan, a piece of old sheet metal, a lump of coal, a flat stone, or a brick, etc. can often be made to cover it, thereby preventing fire and ashes from falling along the track. These defects should be reported for repairs at the end of the run.

REVERSE LEVER CAUGHT AT SHORT CUT-OFF.

61. On some styles of engines, the reverse lever may be caught at short cut-off every time a spring or spring hanger breaks and allows the engine to settle down, more or less, on its boxes, as this will cause the top of the wheel to catch the reach rod and hold it firmly. When the engine is stopped with the reach rod caught in this manner, the cut-off may be so

short that the engine cannot move the train; in order to free the reach rod and reverse lever, it may be necessary to take the pin out of the front end of the reach rod and tumbling-shaft lever and allow the links to carefully drop down on link blocks. The engine will then be in full gear forwards and can be moved as desired. If the trouble is due to a broken spring, or spring hanger, or any other defect in the spring rigging, block up as explained in the Paper on *Breakdowns*. Then couple up the reach rod and tumbling-shaft lever, and the train is ready to proceed.

OFF THE TRACK.

62. It is impossible to do more than give general directions for the replacing of engines upon the track, for the reason that the conditions in any two cases are seldom the same. In the event of two or three pairs of wheels dropping off the rails at slow speed, it is not so very serious a matter, and the engine can generally be run up on the track again by means of her own steam, a block or two, perhaps, being used to assist the wheels in getting up on the rails. If the engine is going fast when it goes off the track, a wrecking car and crew will probably be required to assist in getting it back again. An engine will generally go on the rails easiest by taking it back over the same route it went off.

In the event of an engine going off the track, a few minutes inspection should show whether or not it can be gotten on again without assistance. Sometimes, if the engine is close to the rails and has not settled down in the road bed, it can be gotten on the track again without assistance other than a wrecking frog and wedges, or a couple of car replacers. In some cases, another engine may be necessary to assist in pulling the derailed one on the track. The engineer of the engine that is pulling should always be prepared to stop quickly, in case things do not go just as they are expected. Good judgment must be exercised in placing wedges or replacers in position, for a little thought in regard to this may save hours of hard work.

It frequently happens that engines get off the track so badly that nothing can be done toward getting them on again without

the aid of heavy tools. In such cases, no time should be lost in sending for the wrecking car and crew. If the engine is badly listed to one side, or stands in such a position that some of the firebox sheets are bare, the fire should be banked deeply or put out, so as to prevent any part of the boiler becoming overheated.

If the engine has to be jacked up, a lot of work can be saved by putting nuts, or pieces of iron, between the bottom of the driving boxes and the pedestal binders, so that the wheels will lift with the frame. As the engine is lifted, blocking should be put in place underneath it to "hold good" all that the engine is raised. If the engine truck does not raise with the rest of the engine, chain it to the frame, or it will have to be pried up and blocking put beneath it. If the truck wheels stand at an angle, they should be pulled into line with a tail-rope or chain. When the engine has been raised high enough, cross-ties may be laid, and rails put under the wheels. Then the best way to get it upon the main track will be to break the joints and swing the ends of the rails around far enough to connect with the rails on which the engine rests. The engine may then be moved out, the main track swung back, and the rails again connected.

REDUCING THE FORCE OF COLLISION.

63. When in danger of a head-end collision, the engineer should close the throttle valve, whistle for brakes (if hand-brakes are used), open the sand lever, reverse the engine, and open the throttle. If the train is equipped with air brakes instead of hand-brakes, close the throttle, make an emergency application of the brakes, and open the sand lever, *but do not reverse the engine.* By proceeding thus, the force of the collision will generally be reduced, if the collision is not entirely prevented.

If, in the case of a train with hand-brakes, it is seen that a collision is inevitable, be sure to close the throttle (the engine being reversed) before the engines come together to prevent injury through escaping steam; also, if left open and the engine is not disabled by the collision, it may escape and cause further damage. The engineer should not leave his engine, no matter

how imminent the danger, until after he has used all means of stopping, or at least checking the speed of the train. Then, however, if a violent or dangerous collision is unavoidable, he may protect himself by jumping off the engine, or remain on it, as he deems best; but he should never think of jumping until after he has done all in his power to prevent the collision, especially if he is on a passenger train.

If a collision is likely to occur on a railroad crossing and cannot be avoided by either train, the train occupying the crossing, if moving, should be brought to a standstill, if possible, before the approaching train strikes it. By this means the moving train will simply cut its way through the other, whereas, if both were moving when cut in two, the cars to the rear of the cut would crash forwards and pile up the cars of both trains on the crossing. Even though the engineer of the train on the crossing sees that a collision is unavoidable and that he cannot stop his train before being struck, yet he should try his best to stop, for the reason that the slower the train is moving when struck, the less will be the damage resulting from the collision.

64. Damaged Front End or Smokestack.—In the event of a collision where the front end is damaged to such an extent that the steam pipes are both broken, the engine will have to be towed to the shop. If one steam pipe only is broken, the engine may be run in by making a blind joint in the niggerhead to keep steam out of the disabled steam pipe. If only the front end door or door ring is broken, steam enough to get the engine in can be kept up by boarding up the opening or by the use of a canvas curtain.

In case the smokestack gets knocked off, about the only remedy is to knock the heads out of a barrel and fasten it upright over the hole by means of bell cord, securing it to the hand rails.

POINTS ON WHICH ENGINE IS CARRIED.

65. The entire weight of an engine is carried by the truck wheels, driving wheels, and engine-trailer wheels, if it has the latter; yet it is so arranged that this weight does not bear directly on each of the boxes, when the springs and equalizers

are in good order. For instance, the forward end of an ordinary American eight-wheeled engine, although carried by the wheels of the truck, only rests on the center casting of the engine truck. The weight on the drivers is carried by the springs, these rest on the boxes, and the weight of the engine is transmitted to them by the spring hangers, equalizers, and equalizer fulcrums. The points where the frame comes in contact with, and rests on, this spring gear (namely, the fulcrum points of the equalizers), and the center casting of the engine truck are really the points that are carrying the weight of an eight-wheeled engine. On a Mogul, the weight is carried on the fulcrum points of the equalizers.

BREAKDOWNS.

BREAKDOWNS COMMON TO ALL TYPES OF ENGINES.

1. The object of explaining breakdowns at length is to give enginemen a thorough knowledge of what to do in the event of a breakdown, in order to quickly get the engine in shape to handle the train, or part of it, and to clear the main line in the shortest time possible. The repairs made in an emergency of this kind should be such as can be done most readily, and yet insure safety, and the aim should be to cause as little delay as possible, both to the train and to the general traffic. Just what should be done in any given case will, of course, depend largely on conditions. On a busy line it may be policy to be towed in to clear before attempting to make repairs that, were there sufficient time, could readily be made on the spot and the train brought through all right. The engineer, therefore, should exercise good judgment in all cases of breakdowns, and act promptly and vigorously, remedying the trouble as quickly and thoroughly as possible with the means at his command.

In dealing with the following breakdowns it is assumed that, in case of an accident that necessitates stopping the train, the train crew will take all precautions necessary to protect the train, so that no further mention will be made of this point, as it would simply have to be repeated in each case. It must be borne in mind, however, that in the event of a breakdown you must proceed in accordance with the rules and regulations of your road regarding the protection of the train, notifying officials, etc.

For notice of copyright, see page immediately following the title page.

DISCONNECTING RODS.

2. General Considerations.—In the event of an accident that makes it necessary to disconnect one side of the engine, care should be exercised by those doing the work to see that all the parts it is necessary to remove are taken down, so that they will not cause further trouble. On the other hand, only such parts as it is necessary to remove should be taken down; time is important in a case of this kind, and it should not be wasted in doing unnecessary work. For instance, if the cylinder, piston, or piston rod is damaged, but the rods, cross-head, guides, etc., are not, it may be easier and quicker to let the piston move in the cylinder than to disconnect and take the rods down. In this case see that the moving rod and piston are properly lubricated. The cross-head and guides are depended on to carry the front end of the main rod.

If it becomes necessary to disconnect both sides of an engine to tow the engine in, the same precautions should be taken as when disconnecting one side. In cold weather extra precaution must be observed. In the event of both sides being taken down in cold weather, and it becomes necessary to knock out the fire, proceed as per directions given in *Locomotive Management*, under the heading "Injectors Fail to Work on the Road."

3. Valve Rods.—In order to take down a valve rod, proceed as follows: First open the cylinder cocks and then make sure that the throttle is securely closed; next take down the valve rod and place the valve in its mid-position, in order to cover both steam ports; then securely fasten or clamp the valve stem, so as to keep the valve in its central, position.

To disconnect the valve rod, first take out the top rocker-pin, so as to disconnect the rod from the rocker. Then take out the valve-stem key and remove the valve rod—the rod, pin, and key being put together and placed out of the way on the tender. The valve should then be secured in its place by some means.

A handy device for this purpose is shown in Fig. 1. The holes a, a are bored so as to fit the gland studs, the end b is made to fit the valve-stem keyway, and the part c is made of such a length that when the clamp is fastened to the gland studs and the end b is in the keyway, the valve will be held in mid-position, covering the ports, as shown in Fig. 2.

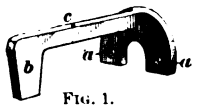

FIG. 1.

Another method of securing the valve in its place is to tie the valve stem to the running board, or hand rail, in such a way as to spring the valve stem sufficiently to insure its holding the valve in position. With the old style of stuffing-box, the valve may be held in position by simply loosening the nuts on one stud and tightening the nuts on the other stud so as to tilt, or cant, the gland and cause it to pinch the stem.

Still another method is to cut a piece of flat iron, about 1 inch by $\frac{1}{4}$ inch, and long enough so that when put between

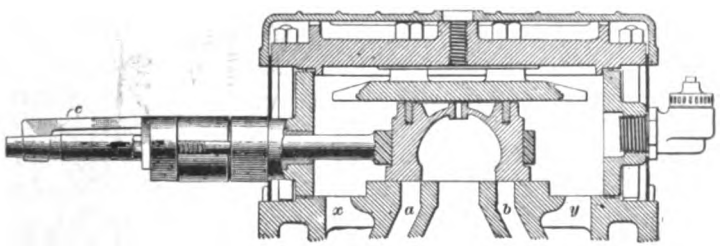

FIG. 2.

the valve stem and stuffingbox stud, and the stud nut is screwed down on it, the valve stem will be crowded against the side of the stuffingbox and held firmly in place.

4. Strap-End Main Rods.—To remove the main rod, begin at the back end. First, take out the key and then remove the rod-strap bolts, and take off the oil cup to prevent bending the spindle. Where the cup is forged solid with the strap, remove the spindle if necessary. Then block, or hold up the main rod so that it will not drop on the guide yoke when pulled out of the strap. To pull it out of the strap, pry the crosshead toward the cylinder. The rod should be carefully

let down. The liners, brasses, bolts, and keys should all be put back in the strap, and placed where none of the parts will get lost.

The front end of the main rod can now be removed. To do this in cases where the wristpin cannot be taken out, remove the strap bolts, after which the rod may be taken down and placed out of the way, upon the foot-board or upon the pilot. The strap and brasses should be taken from the wristpin, and the brasses, liners, and bolts placed in the strap, and the key driven home to hold the parts together. If the wristpin is removable, remove it in taking down the front end, as that will be much easier than removing the strap, etc.

5. Solid-End Main Rods.—In the event of a solid-end rod having to be taken down, begin with the front end. Slack off on the key (remove it, if necessary), remove the wristpin from the crosshead, and carefully lower the front end of the rod. Then take the back end off the main pin, and place the rod in some safe place on the engine, where it will be as much out of the way as possible. The wristpin should then be put in place in the crosshead, its washer and nuts next, and the cotter pin then replaced.

On engines where the main rod is connected to the main pin inside the side rod, it may be necessary to remove the side rod to get the back end of the main rod off the pin; in this case, if the side rod does not have to stay down, replace it again, taking care to securely fasten the nuts on the end of the pins to avoid further trouble.

In case the end of the main rod on the main pin is outside the side rod, and there is no collar on the pin between the brasses, the side rod will have too much side play on the pin when the main rod is removed. In that event, the main-rod end can be replaced with a collar block like that shown in Fig. 3, provided the engineer has been thoughtful enough to keep one on the engine with him. If no such clamp is at hand, cut some blocks the proper length and wire them on to the main pin. You can probably get in to clear by this means,

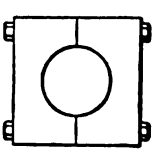

FIG. 3.

and a suitable clamp can then be made for the purpose. After taking down the main rod, the next thing to do is to block the crosshead.

BLOCKING THE CROSSHEAD.

6. Alligator Type.—If the crosshead is of the alligator type, push it to the back end of the guides until it is even with the travel mark, and block it there securely to prevent its moving should steam leak into the cylinder. It is always a good plan to remove the cylinder cock from the end that the piston is in, or block it open to insure against an accumulation of pressure back of the piston. A method of blocking this type of crosshead is shown in Fig. 4 (*a*). View (*b*) shows a handy clamp for this purpose. If no clamp is at hand, wire the block in place, or use a piece of bell cord, or other cord, or rope, that is strong enough. The crosshead should be blocked at the back end of the guides, for the reason that if it should come loose and the piston be forced forwards through the front cylinder head, less damage will be done than would be the case if the piston were forced through the back head. On some engines, however, the piston must be blocked to the front end

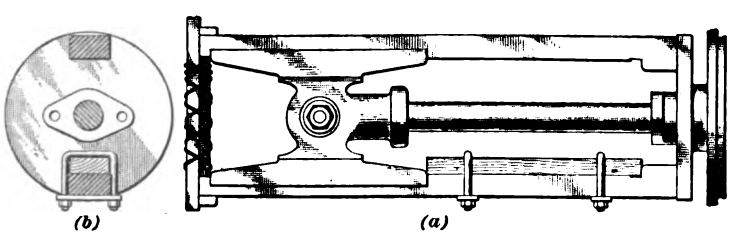

FIG. 4.

of the cylinder, for the reason that the crankpin on the front driver will not clear the crosshead when it is at the back end of the guides.

To prevent the packing ring getting into the counterbore, the block for blocking the crosshead should be cut to such a length that the crosshead will not be moved beyond its usual travel mark, and a wooden wedge should be driven between the back of the crosshead and the guide.

7. Underhung Type.—If the engine has an underhung crosshead and two-bar guides, the main rod can be removed, the crosshead pushed to the back end of the guides, and then

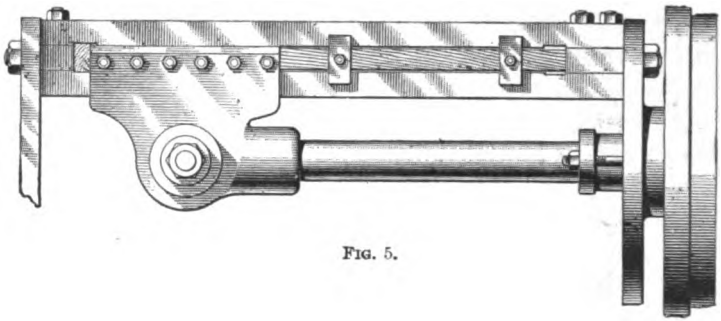

FIG. 5.

blocked in the manner shown in Fig. 5. This blocking may be held with clamps, as shown in the figure, or it may be wired or tied in place.

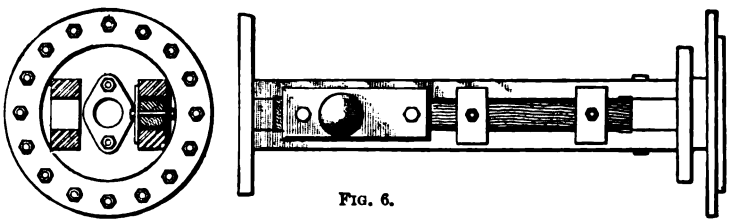

FIG. 6.

8. Locomotive Type.—If the crosshead is of the locomotive type, having four-bar guides, it can be blocked as shown in Fig. 6.

SIDE RODS.

9. American Standard Engine.—To take down or remove a side rod on an eight-wheeled, or American standard, engine, it will be necessary to take off both rod straps. To do this, loosen the setscrews that hold the front rod keys, remove the key in the front end of the rod, and the front key in the back end of the rod, take the rod bolts out, and, if the oil cups are screwed on to the strap, they should be taken off to

prevent bending the spindles. If the cups are solid on the rod, it may be necessary to remove the spindles instead of the cups. With some designs of cups, however, it is not necessary to remove either. While taking off the straps, the rod should be held in position so that it cannot fall and become damaged. The brasses, liners, bolts, and keys should be put back in their places in the straps to prevent their being lost.

If the rods have solid ends, the nuts and washers on the end of the pins must be taken off, after which the rod can be taken down. The washers and nuts should then be put back in place to prevent injury to the threads on the pins.

If the engine is so constructed that the side rods are connected to the main pin between the wheel and the main rod, the back end of the main rod may have to be taken down to get the side rod down. If the main rod is connected to the main pin next to the wheel, and there is no collar on the pin, a collar block, Fig. 3, will have to be used to keep the main rod in place on the journal of the pin. If it ever becomes necessary to take down a side rod on one side of an engine, its mate on the other side must be taken down also; for if this is not done, the chances are that either the rod that is left up, or its pins, will be bent or broken. When an engine is run with only one side rod up, the main driver has to drag the second driver with it by one side only; the second driver, therefore, lags behind the main driver, and as a result, the latter passes the center slightly in advance of the former, which throws a heavy strain on the rod and its pins, and both are very apt to be bent or broken.

10. Mogul or a Ten-Wheeled Engine.—When removing the rods on a mogul or a ten-wheeled engine, the main rod may be taken down in the same manner as that of a standard engine, but if the side rods are damaged so that they also must be removed, proceed as follows: If the damage is in the section having the knuckle joint, all the side rods must be taken down, because with the knuckle section gone, there will be nothing to hold the other section in position and connect it with the main pin. If the short section is the one damaged, it will only be necessary to remove that section and its mate.

11. Consolidation Engines.—When it becomes necessary to disconnect and take down the rods on a consolidation engine, the main rod may be taken down in the same manner as in any other design. If the engine is of the very large types, and the crew is unable to take down the rods and place them upon pilot or footboard, the rods can be left up and the engine run in with safety, if proper precautions are taken. If the rods are left up, remove the vacuum relief valves in the cylinder heads. Also, unscrew the caps from the indicator plugs (if they are provided) in the top part of the cylinder, so as to provide a means of getting sufficient oil into the cylinders to freely lubricate them. Another method is to shift the valve and clamp it on its seat in such a position that it will make a very small opening into the cylinder, and thus by allowing a small amount of steam to enter, prevent the piston from cutting the walls of the cylinder. This scheme makes it convenient to start the engine off the center, in case the engine happens to stop on one. To do this, close the cylinder cocks on the disabled side, and the steam will move the engine off the center. After the engine is moved, the cylinder cocks should again be removed, or blocked open.

If an accident occurs to the side rods of a consolidation engine, such as a broken front, center, or back section, it will at least require the removal of the broken rod and its mate on the opposite side. The knuckle-joint pins are in the front and back sections, so that if the trouble is in the front section on one side, only the broken rod and its mate must be removed; to do this the crankpin should be placed on the bottom quarter, as in this position the knuckle-joint pin can be taken out through the spokes of the wheels and the front end of the rod can be taken off the pin under the bottom guide. If an accident occurs to the center section, all side rods must be taken down and the engine run with main drivers only. If an accident occurs to one side of the back section, only the broken rod and its mate should be removed. The principle of disconnecting twelve-wheelers, decapods, etc. is the same as that of a consolidation engine.

BROKEN REVERSE-LEVER REACH ROD.

12. In the event of a broken reverse-lever reach rod, the links should be raised to such a position as will enable the engine to handle the train conveniently, and, if the tumbling-shaft lever extends through the running board, the links may be held in position by placing a block in the slot in the running board on either side of the lever. If the engine is so constructed that the tumbling-shaft lever does not extend up through the running board, it will be necessary to put a block in the link slot on the top of the link block that is sufficiently long to hold the links up to the desired height. With the links blocked in this manner, the engine can be run ahead at a fair rate of speed; but when it becomes necessary to run backwards, the blocking will have to be changed and a longer block put in the link slot to raise the links to the proper height.

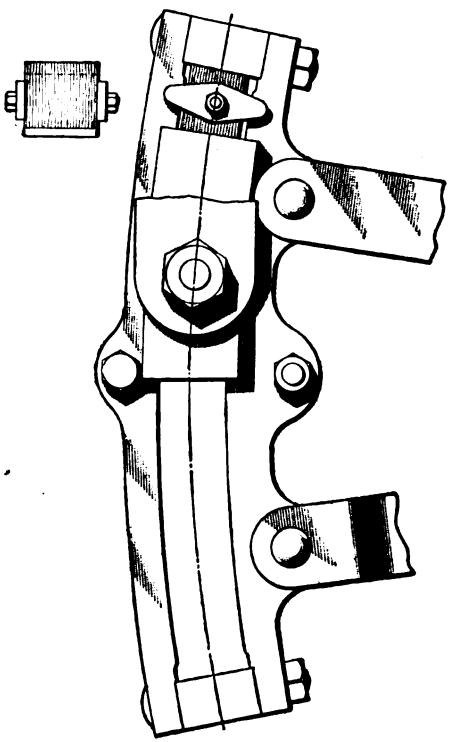

FIG. 7.

BROKEN LINK HANGER, SADDLE PIN, OR TUMBLING-SHAFT ARM.

13. The remedy in the event of any of the above parts breaking will be the same in all cases, and is as follows: Remove all broken parts to avoid further trouble; then, by means of the reverse lever, drop the link on the good side far

enough so that the engine can surely start the train; the heavier the train the more it should be dropped. Next, measure the distance between the top of the link block and the top of link slot and cut a block of that length that will fit into the slot of the link on the broken side, as represented in Fig. 7, a handy block clamp being shown in this figure, also. The tumbling shafts on most engines are so constructed that the tumbling-shaft arm on the disabled side will drop in behind the top of the link when it is forward in full gear, unless the link is blocked down far enough to clear it; as the top of the link moves back, it strikes the end of the arm, and a broken eccentric strap or tumbling-shaft stand results. Fig. 8 shows the method of doing this work. No damage will result from hooking the good link up, however, but the cut-off on the blocked-up side will remain constant, whereas the cut-off on the good side will be shortened. Blocked up in the manner just described, an engine cannot be reversed, and in the event of it becoming necessary to back up at any time, the block in the slot of the disabled link must be replaced with one long enough to raise the link up where it belongs for backing up. Thus it must be borne in mind *that the engine cannot be reversed while running*, and should not be run without a good brake to stop her.

BROKEN TOP OR BOTTOM ROCKER-ARM.

14. When a top rocker-arm breaks, it necessitates the removal of the valve rod, the broken part of the rocker-arm, and the main rod on that side; also, the crosshead must be blocked, and the valve clamped in mid-position to cover the steam ports.

If the bottom rocker-arm breaks, remove the broken parts. If the eccentric-rod bolt in the front end of the forward-motion eccentric rod does not travel too close to any part of the rocker-arm still remaining, the link may be left up, but if there is any danger of its striking the broken arm, the link, eccentric rods and straps should be taken down to prevent further damage.

If a transmission bar is used to transmit the motion from the link to the bottom rocker-arm, as on many designs of engines

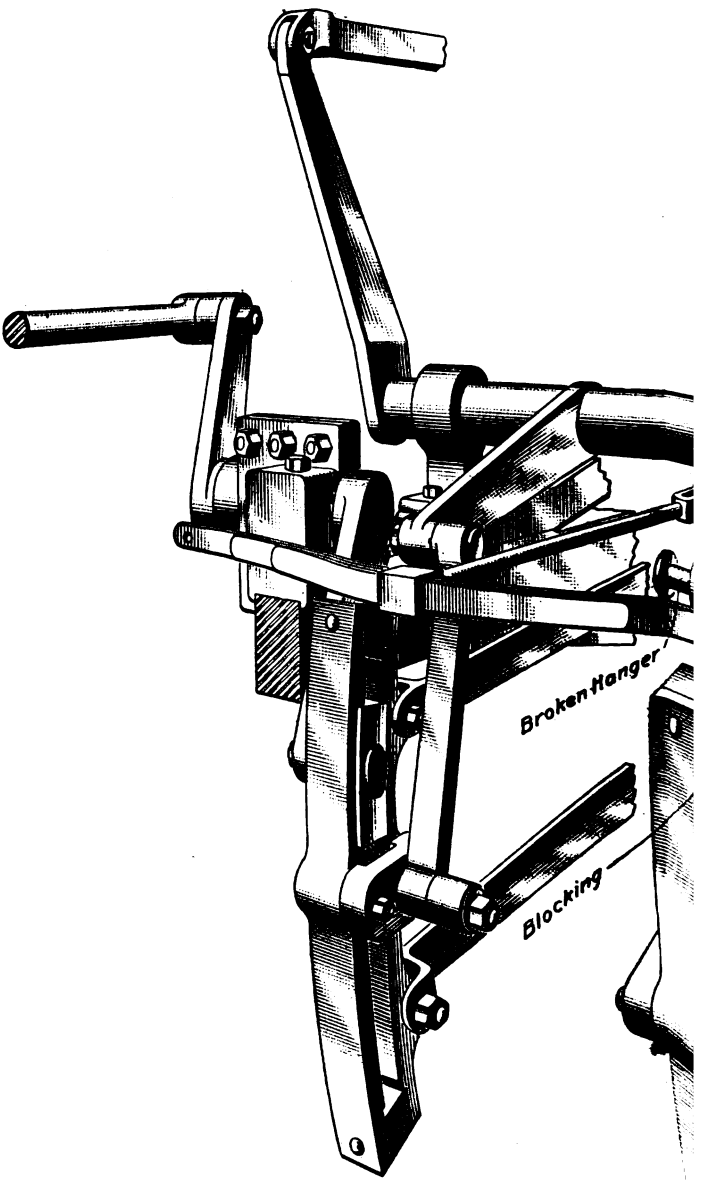
Broken Hanger
Blocking

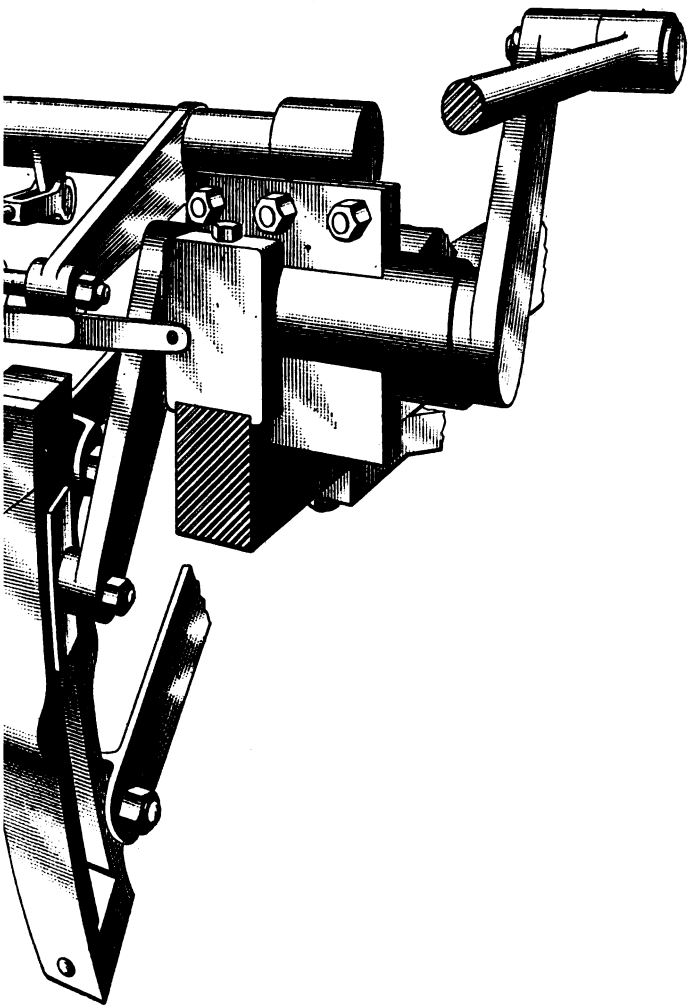

FIG. 8.

having short eccentric and valve rods, the end connected to the broken rocker may be chained to the front belly brace, and carried that way so as to avoid loss of time in removing it.

BROKEN FORWARD-MOTION ECCENTRIC STRAP OR ROD.

15. Should a forward-motion eccentric strap or rod break on an engine having short eccentric rods, when only a short distance from destination, remove the broken strap and rod, take down the valve rod, clamp the valve in such position as to barely open the steam port, and leave the main rod up. Then take off the link hanger and allow the link to ride on the link block. This method can also be used on engines having transmission bars, if the distance to be run is not too great. However, if it is very far to the destination, it is best to take down both the eccentric straps and rods on the disabled side, and proceed with as much of the train as can be handled with the good side of the engine. This is a case where the engine can be run with both main rods up if the rules of the road permit.

BROKEN BACK-MOTION ECCENTRIC STRAP OR ROD.

16. In the event of the back-motion eccentric strap or rod breaking, the engine can be run ahead with the reverse lever in the forward corner by taking down the broken rod and strap, taking care to fasten the bottom end of the link, both forward and back, so that it cannot swing back and forth. To avoid damage that might result in case the engine should be reversed, a block of wood should be secured in the link slot between the bottom of the link block and the bottom of the link. This block is intended to make it impossible to thoughtlessly reverse the engine while the back-up eccentric rod is missing. If it becomes necessary to run the engine backwards while in this condition, the forward-motion eccentric strap and rod must be taken down and also the valve rod and main rod on the disabled side; then clamp the valve so as to cover the steam ports, and push the crosshead to the back end of the guides securely and block it there. The engine can then be run either backwards or forwards by means of the good side. Should this mishap occur while handling a train that

could not be moved with one side, and it became necessary to back the train off the main track, the forward-motion strap and rod could be taken down and turned upside down so that the jaw on the rod could be coupled to the link and the other end put on the back-motion cam. If it does not fit the cam exactly, leave the strap loose enough to prevent binding. This arrangement will give the use of both sides of the engine for backing up. The cam can be oiled by removing the plug in the oil well of the strap. In most cases, this scheme can be used in times of emergency, with either short or long eccentric rods.

SLIPPED ECCENTRICS.

17. What to Do in Case of a Slipped Eccentric. The question of what is best to do when an eccentric slips during the run is one that cannot be answered off-hand, since the governing conditions differ in every case, and the engineer must act in accordance with the prevailing conditions. A slipped eccentric will be indicated by the engine "going lame" or "out of square"; that is, the exhausts, instead of occurring at regular intervals, will be irregular. Now, if an engine should slip an eccentric far enough to make her quite lame, yet not far enough to prevent the usual time being made, the best course to pursue would be to keep the valves well oiled and get in on time, if possible, and report the slipped eccentric at the end of the run. If the eccentric should slip so far that time could not be made, the course to pursue would be to get on a siding at the first opportunity, so as to leave the main line free while the eccentric is being reset. On the other hand, if the engine should suddenly go very lame, the proper course would be to stop immediately, protect the train, and proceed to find out the cause. The trouble instead of being caused by a slipped eccentric may be due to a broken eccentric or strap, or a broken valve yoke, and serious damage may result from attempting to run the engine in its crippled condition.

18. Locating a Slipped Eccentric.—If the exhaust suddenly goes badly out of square, proceed as follows: Immediately close the throttle, but do not move the reverse lever

until the train has stopped. After coming to a stop, inspect the engine to ascertain what is wrong; feel the eccentrics to see if one is warmer than the others, as the warmer is probably the one that has slipped.

To locate a slipped eccentric, open the cylinder cocks, place the reverse lever in the forward corner, and start the train slowly. Watch whether steam discharges from the cylinder cocks on either cylinder the instant the crosshead reverses its motion. It should do this, and if it does not at one cylinder cock, the eccentric slipped will be the go-ahead eccentric on that side. If the valves are all right in full gear, but are out of square when in the usual working notch, it would indicate that the trouble is in a back-up eccentric. The effect of a slipped eccentric is to either increase or decrease the lead, depending on whether the eccentric slipped toward, or away from, the main pin. Hence, a slipped eccentric will cause steam to appear either too soon or too late at both cylinder cocks, while an eccentric rod of improper length will cause it to appear too early at one and too late at the other cock.

19. Setting a Slipped Eccentric.—When the eccentrics are in their proper positions, a mark should be made on the eccentrics and driving axle that will indicate their correct positions; then, should an eccentric slip during the run, it can be reset both rapidly and accurately by simply moving the eccentric until the marks come together again. Unfortunately, the marking of eccentrics is not followed generally; hence, enginemen are obliged to understand other quick methods that will enable them to set the eccentrics at least approximately correct in as short a time as possible. There are several quick methods of setting an eccentric; some of which require more time for the work than others, but where time is extremely short, the best plan is simply to guess at the proper position. Before going under the engine, be sure to block it securely as a protection against accident; then move the slipped eccentric until its web or spoke forms an angle with the main pin as nearly equal to that of the other eccentric as it is possible to judge. Secure the eccentric in this position and get away at

the earliest possible moment. A thorough knowledge of the relative positions of the eccentrics to their main pin will be of the greatest value in setting an eccentric by guess.

First Method.—If unable to judge of the relative positions of the eccentrics, proceed as follows: Remove a setscrew from the eccentric; stick a lead pencil in the setscrew hole; roll the eccentric on the axle in the proper direction until the old mark where the setscrew has been is found; tighten the setscrews on the axle, and the eccentric is reset to the old mark.

Second Method.—When this method is used to set a go-ahead eccentric, the engine on the disabled side must be placed on the forward dead center, with the reverse lever in the back corner. Then scratch a mark on the valve stem flush with the face of the gland, and move the reverse lever to the front corner. Block the engine securely, and roll the go-ahead eccentric until its web points toward the top quarter; then roll it toward the main pin until the scratch on the valve stem is again flush with the gland, that is, in the same position as when it was made, and tighten the setscrews to hold the eccentric in position.

When the engine is on the front center and the reverse lever is in the back corner, the slide valve (provided the back-up eccentric is properly placed) is in the proper position to give the required lead; the valve stem is marked to indicate this position. When the go-ahead eccentric is properly placed on the axle, moving the reverse lever from the back corner to the front corner will only move the valve an amount equal to the lap and lead of the valve. Suppose it is not properly located: In that event it is first rolled away from, and then toward, the main pin (to take the slack in the right direction) until the scratch on the valve stem is flush with the gland again, in which position, of course, the valve must be properly placed to give the required lead.

Third Method.—To reset a go-ahead eccentric, place the disabled side of the engine on the back center, place the reverse lever in the front corner, open the cylinder cocks, and block the engine securely. Go under the engine and roll the eccentric on the axle until its web points toward the bottom quarter, then have the fireman carefully open the throttle a

small amount. Slowly roll the eccentric toward the main pin until steam shows at the back-cylinder cock, when the setscrews should be tightened. This will give the valve a small amount of lead in forward motion.

To prove whether the eccentric is properly placed, open the cylinder cocks and the throttle—the latter slightly; then move the reverse lever from the front to the back corner and back again, and note the discharge of steam from the back-cylinder cock for each position of the lever. When in backward motion, the back-up eccentric gives the valve its lead; when in forward motion, the go-ahead eccentric gives the valve its lead. The lead will be the same in both motions if the eccentrics are correctly set; if, however, one of the eccentrics has slipped, or is not correctly placed on the axle, the lead will be unequal in the two motions, and the discharge of steam from the back-cylinder cock will be unequal also. If, then, the discharge from the back cock is the same for both positions of the lever, the eccentric is correctly placed. If the discharge is heavier when the lever is in the forward corner, the valve has too much lead in forward motion, and the go-ahead eccentric must be rolled slightly away from the main pin to reduce the lead and equalize the discharge. If it is heavier when the reverse lever is in the back corner, it indicates that the valve has too little lead in forward motion, and the eccentric must be rolled slightly toward the main pin to increase it.

To set the back-up eccentric—when it can be set without taking the go-ahead strap down—place the engine on the front center with the reverse lever in the back corner. Begin with the back-up eccentric web pointing toward the bottom quarter, and roll the eccentric toward the main pin until steam escapes from the front cylinder cock, when the eccentric should be secured to the axle.

An easy and fairly accurate method of quickly determining when an engine is on the dead center, for use in cases of slipped eccentrics, is as follows: Find the travel marks, as described in *Steam, Cylinders, and Valve Gears*, Part 2, and then move the engine until the end of the crosshead corresponding to the center desired is in line with its travel mark.

The foregoing methods apply to **D** valves, whether balanced or not, operated by an indirect motion that uses a rocker-shaft. In the case of a direct-motion engine with a **D** valve, or a piston valve having outside admission, the position of the eccentrics with relation to the crankpin will be directly opposite, as has been mentioned heretofore. The position of eccentrics moving a piston valve having inside admission is directly opposite that of the eccentrics of a **D** valve having outside admission.

BROKEN VALVE YOKE.

20. A broken valve yoke will be indicated by the engine going seriously lame, and if necessary to stop to ascertain the cause it should be done by means of the brakes. Never reverse the engine to help stop the train in the event of the engine suddenly going lame. As soon as the train comes to

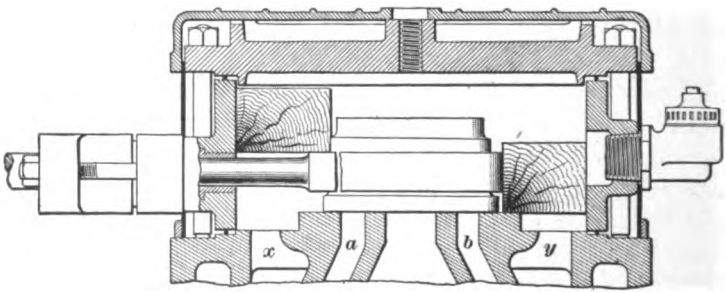

FIG. 9.

a standstill, try to locate the trouble as follows: Beginning on, say, the right side, place the right main pin on the quarter; open the cylinder cocks; admit a little steam into the cylinders; and then move the reverse lever from one corner to the other. If steam does not show at the same point of cut-off in both back and forward motion, the trouble is on that side, but if steam shows at the same point of cut-off, the trouble is probably on the left side. To make sure that the trouble is on the left side of the engine, place the left main pin on the quarter and proceed according to above directions for the right side of the engine. When the trouble has been located, proceed as follows:

Take down the main rod on that side and block the crosshead; remove the steam-chest cover; disconnect the valve rod, and place the valve so as to cover both admission ports to the cylinder, as shown in Fig. 9; and fit blocks between the front and back sides of the valve and the steam chest, so that the blocks will hold the valve in place. Then replace the steam-chest cover.

If the valve stem is broken so that it will come out through the gland, a wooden plug must be driven into the valve-stem opening from the inside of the steam chest.

Another method is to simply clamp the valve ahead in a position to admit steam to the back end of the cylinder, and securely block the crosshead at the front end of the guides.

Still another method, where the relief valve is in the front end of the steam chest, is to fit in the relief valve a plug of wood that is long enough to hold the valve exactly over the ports. This will hold the valve from coming forward. It can be held from going backwards by the valve stem, which should be clamped in position in the usual manner.

21. If the cylinders are so constructed that the steam pipes are connected to the side of the steam chest, slack up on the nuts of the steam-chest studs and then remove the joint at the connection and insert a piece of 1-inch board, sheathed with a piece of sheet metal on the steam-pipe side to prevent the steam blowing a hole through the board. A piece of an old scoop will serve this purpose nicely. Tighten the bolts securely to insure a tight joint. It will not be necessary to remove the main rod on large engines where the rod is very heavy and there is not sufficient help present to take it down, if the cylinders are provided with pressure-relief valves, such as are used in the cylinder heads of many makes of large engines. The compression produced in the cylinder by the piston can be relieved through the opening made by removing the relief valves in the cylinder heads.

In the event of the steam pipes not being connected to the side of the steam chest, as stated above, other means must be adopted to prevent steam from entering the steam chest. This may be accomplished by removing the steam-chest cover and

fitting blocks of wood over the admission ports to the steam chest, as shown in Fig. 10.

The blocks for the front port may all be made of one length. One of the back blocks, however, must be made of two pieces, or else be notched out so that it will allow for the valve stem, and thus avoid removing the stem.

Referring to Fig. 10, it will be observed that blocks are fitted over the steam-chest admission ports, and sufficient blocks are used to enable the balance plate attached to the steam-chest

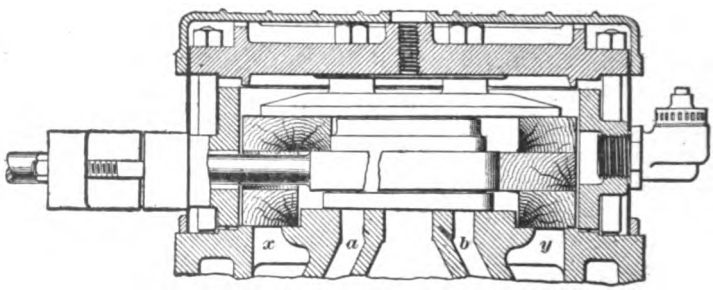

FIG. 10.

cover to hold the blocking in place when the cover is drawn down tightly on the blocks by the steam-chest bolts. By drawing the cover down tight enough, steam-tight joints can be made at the ports x and y, and steam will be excluded from the steam chest. This method of blocking can also be used in the event of a broken valve stem or valve.

BROKEN VALVE-STEM STUFFINGBOX GLAND.

22. In the event of the breaking of a valve-stem stuffing-box gland, the packing, and probably the back bushing also, will blow out with the broken gland. A great loss of steam will thus occur through the large opening around the valve stem, which will affect the working of the engine to a greater or less extent, besides being very wasteful. To prevent this waste of steam and to temporarily repair the mishap in order to get to destination, the back bushing should be replaced and the stuffingbox repacked with fresh packing; then, if there is enough of

the gland left to keep the packing in the stuffingbox, it should be set against the packing and held there. This may be done by means of two pieces of sheet metal cut as shown in Fig. 11 (*a*). One piece *a* fits over the valve-stem and stuffingbox studs from above, and the other piece *b* is slipped up from below. The two pieces are then held against the end of the broken gland by means of the stuffingbox nuts, as shown in view (*b*), a nut being

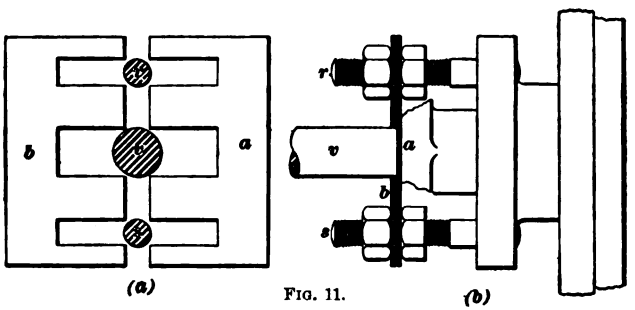

FIG. 11.

placed on either side of the pieces of sheet metal and the nuts tightened up hard. The sheet-metal pieces can be cut out of an old scoop shovel or out of any other piece of sheet iron that may be at hand.

BROKEN VALVE SEAT.

23. In the event of the valve or valve seat breaking, it often happens that the piece broken off causes considerable additional damage. This piece may become wedged in one of the steam ports in such a way that the valve will strike it and bend or break the valve stem, valve rod, eccentric rod, or rocker-arm, or else slip an eccentric; or, the piece may find its way into the cylinder and there do considerable damage. A broken valve or valve seat will be indicated by the irregular action of the exhaust. The bridge is the part of the valve seat that usually breaks; so to test for a broken valve bridge, proceed as follows:

Beginning on, say, the right side of the engine, place the right main pin on the top quarter, move the reverse lever to the forward corner, apply the driver brakes or block the drivers, and then open the throttle slightly. With the parts thus arranged,

Fig. 12, the steam port to the back end of the cylinder will be open to the steam chest, while the port to the front end of the cylinder will be connected by the valve to the exhaust cavity. Should the back bridge be broken, steam will be discharged through the break into the exhaust passage, and a violent blow will occur. This blow will cease when the reverse lever is moved to the back corner, however, if the front bridge is not broken also, for then steam will be shut out of the back steam passage. If no blow occurs with the lever in the front corner, move it to the back corner, and if a blow then occurs, the front bridge is probably broken. If so, the blow should cease when the reverse lever is moved to the front corner, provided the back bridge is not broken also. If no blow occurs with the reverse lever in this position, move the engine so that the left main pin is on the

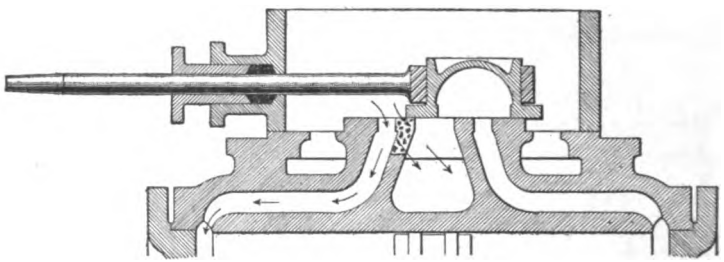

FIG. 12.

quarter, and test the left side in the same manner as the right side. Having located the trouble, disconnect the valve stem and clamp the valve on the center of its seat so as to cover both steam passages to the cylinder. Then take down the main rod, block the crosshead securely and proceed with one side.

In the event of the outer wall *s*, Fig. 13, of one of the steam passages breaking, it will be impossible to keep steam out of that end of the cylinder, and, consequently, there will be a constant blow from the corresponding cylinder cock, regardless of the position of the valve. Also, there will be a violent blow every time the valve is moved so as to connect the exhaust cavity with the steam passage whose wall is broken.

When an accident of this nature occurs, disconnect the valve rod, move the valve until it connects the uninjured steam

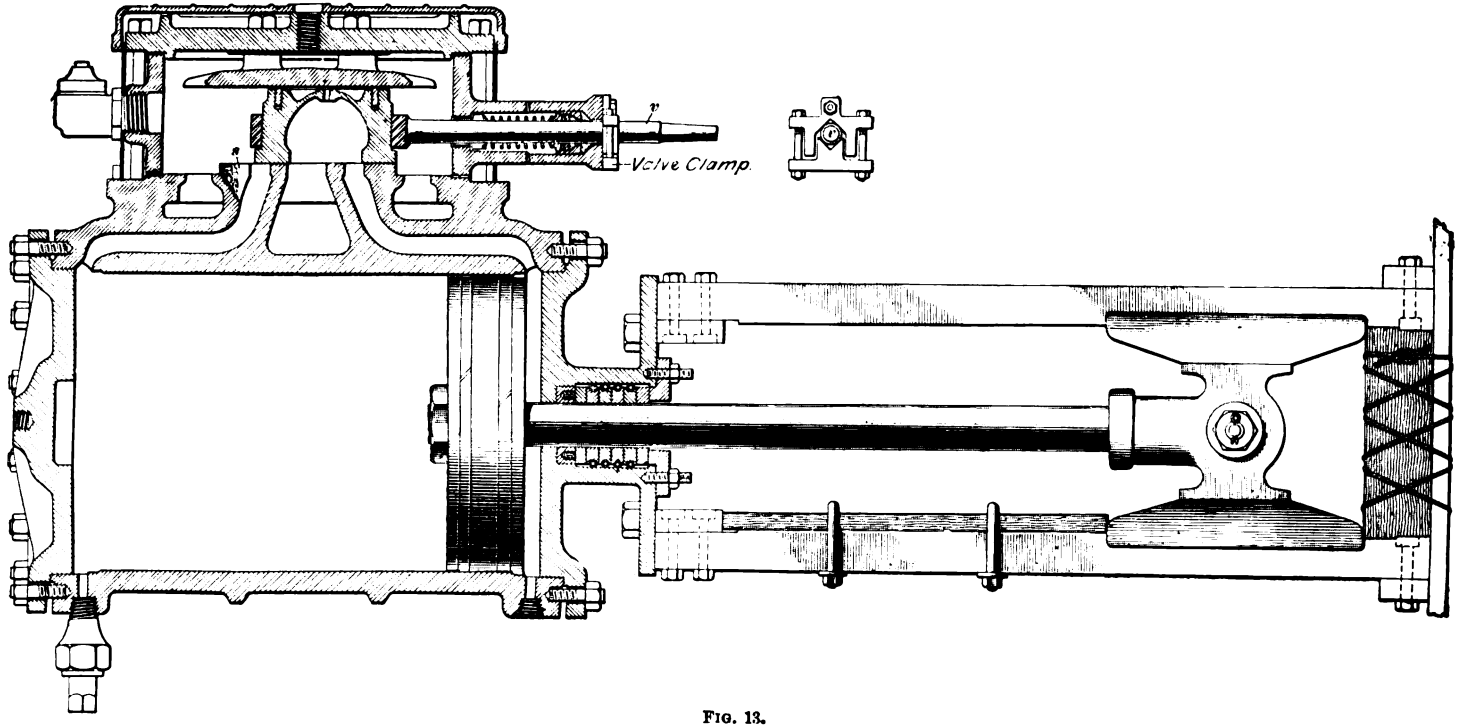

FIG. 13.

passage with the exhaust passage, as shown in the figure, and then clamp it in that position. Disconnect the main rod, move the piston to the end of the cylinder opposite the broken port, block it there securely, and then remove the cylinder cock from that end of the cylinder to prevent pressure accumulating behind the piston. The broken port, of course, will allow its end of the cylinder to fill with steam, but no harm can result.

A very convenient form of valve clamp is illustrated in the figure. The clamp is shown in position clamped to the valve rod, and, also, a front view is given.

BROKEN FALSE VALVE SEAT.

24. If a false valve seat is badly broken, so that steam blows through into the exhaust port, it will be necessary to make a tight joint over the steam and exhaust ports. If the pieces cannot be fitted together steam tight, take the false seat all out. In many cases the valve can be dropped down and so made to cover the ports, otherwise a board must be used, in which case the valve will have to be taken out, and it may be left out. Hold the board down by a block of wood between it and the steam-chest cover. The steam pressure usually does this, the block simply being used to hold the board in position while the engine is running shut off. Some false seats are fastened down with tap bolts going into the top of the cylinder, in which case the false seat cannot be taken out, but must be covered so that steam cannot get by it. With a balanced valve, a board must be used, otherwise steam will blow through the exhaust cavity and out of the exhaust.

BROKEN VALVE.

25. A broken valve will be indicated by a constant blow at the exhaust, the amount of the blow depending on the size of the break. To test for a broken valve, proceed as follows: First note on which side of the engine steam blows from both cylinder cocks when the reverse lever is moved back and forth

with the throttle slightly open. If you do not locate the valve at once, then begin on the right side of the engine, place the valve on that side in mid-position, so that it will cover both steam ports; then open the cylinder cocks and open the throttle a small amount. If no blow occurs when the throttle is open, the valve on that side is all right; however, if a blow does occur when the throttle is open and at the same time steam escapes from one of the cylinder cocks, the indications are that the valve is broken, for the reason that a broken valve will allow steam to escape to the exhaust and to one of the steam ports, as indicated in Fig. 14. To test still further for the broken

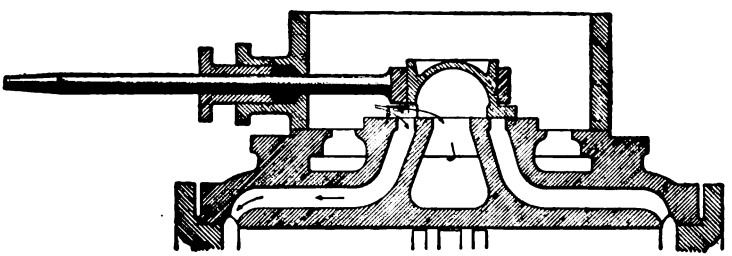

FIG. 14.

valve, move the valve far enough toward the end of the cylinder that shows no steam at the cylinder cock to connect the steam port to that end of the cylinder with the exhaust, and if steam then appears at both cylinder cocks at the same time, and there also is a blow at the exhaust, it will be an additional indication of a broken valve. In this case the steam passes into the exhaust cavity, and thence finds its way through the steam passages into the other end of the cylinder.

BROKEN STEAM CHEST.

26. In the event of the steam-chest walls cracking in such a way as to necessitate repairs, it will be found that the break can often be forced together so as to make a nearly steam-tight joint by simply driving suitable wedges between the steam-chest studs and the walls of the chest, at the corners opposite the break, as shown in Fig. 15. Of course, in order to do this,

the steam-chest casing and lagging must be removed, and the nuts on the studs must be slacked off. Iron wedges are the best to use, although good hard-wood wedges will prove very effective. Iron wedges may be hammered out of big spikes, bolts, etc. that may be at hand. After the crack has been wedged together, tighten the nuts on the steam-chest studs, put the casing and lagging on the tender, and connect up the oil pipe and proceed.

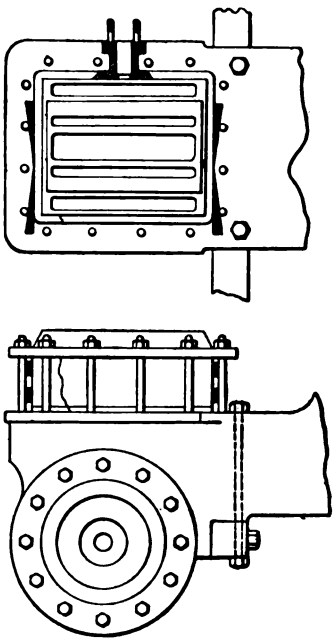

FIG. 15.

If the break is so bad that it cannot be wedged together, disconnect the valve rod, remove the steam-chest cover, and block steam out of the steam chest by fitting blocks over the steam-chest admission ports, as already explained. Then replace the steam-chest cover and proceed. This is a case when the engine can be run with the main rod up, if the rules of the road permit.

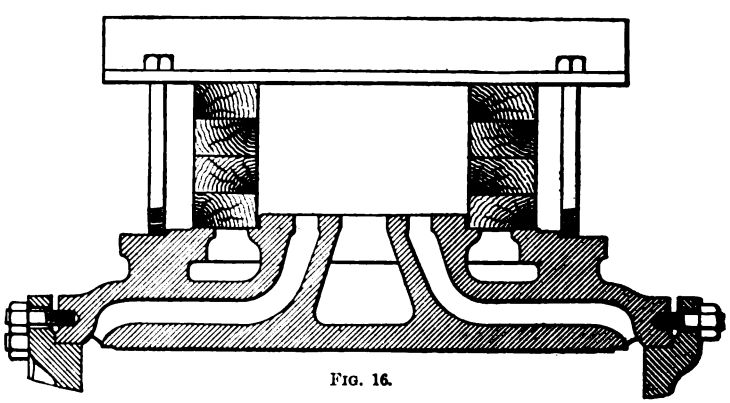

FIG. 16.

If the steam chest is entirely demolished, but some of the studs are left, try to block the steam ports as shown in Fig. 16, using fish plates or anything else at hand that will serve the purpose.

In case so many studs are broken that the steam-inlet ports cannot be blocked as shown in Fig. 16, it will be necessary to make a blind joint in the steam pipe inside the smoke arch. As this is an operation requiring considerable time, it may be better to have the engine towed to a shop where the steam chest can be repaired. Should this be impracticable, loosen the steam-pipe joint, put in a thin piece of sheet iron—part of an old scoop shovel will do—that will keep the steam out of the broken steam chest.

BROKEN PISTON STUFFINGBOX STUD AND LUG OF GLAND.

27. In the event of a stud or a lug of the gland breaking on an old style stuffingbox, partly refill the stuffingbox so that the gland will enter far enough to hold it square and prevent its tipping sufficiently to pinch the valve stem when held in place by the remaining stud and lug. If both lugs or studs are gone, wrap the outside of the gland with cloth and then drive the gland in place. A piece of scantling can be used, reaching from the running-board bracket against the gland. This may hold the gland in position. If it will not, or if the gland is broken so that it cannot be used at all, then proceed with the train as it is. Do not disconnect for a failure of piston-rod packing. It will cause a waste of steam, to be sure, but the train can be brought in all right without wasting time disconnecting.

BENT PISTON ROD.

28. In the case of a bent piston rod, disconnect the valve rod and clamp the valve at mid-travel, take down the main rod and block the crosshead securely, remove the cylinder cock behind the piston, and then proceed with one side of the engine.

Another method, if the crosshead, guides, etc. are not

damaged and the piston rod can be easily disconnected from the crosshead, is to take off the front cylinder head, remove the piston and piston rod, disconnect the valve rod, and clamp the valve in mid-position, allowing the crosshead to carry the front end of the main rod. In this event, the guides must be kept well lubricated.

BROKEN PISTON ROD.

29. When a piston rod breaks, it almost invariably causes the front cylinder head to be knocked out; it generally breaks close to the piston, and, in this event, if the crosshead is not damaged or the piston rod bent, all that it is necessary to do is to disconnect the valve rod and clamp the valve in mid-position, so as to cover both steam ports to the cylinder. The main rod can be left up, because the crosshead will carry its front end, and the stuffingbox will carry the front end of the piston rod, but the rod swab should be kept oiled. If the rod breaks at the crosshead, but does not injure the crosshead, disconnect the valve rod and clamp the valve in mid-travel so as to cover the steam ports. In this case, also, the main rod can be left up. In the event of the crosshead being so damaged as to be unserviceable, it will then be necessary to disconnect the main rod and to block or secure the crosshead, to keep it stationary

BROKEN CYLINDER HEAD.

30. If the front cylinder head should be broken, disconnect the valve rod and clamp the valve centrally on its seat, so as to cover the steam ports, take down the main rod, block the crosshead securely, and remove the cylinder cock. Proceed by using the other side of the engine. The method of blocking just described can be used to advantage on the ordinary engines now in service, but if the front cylinder head of one of the very large engines in service on mountain grades on many railroads should be knocked out, and no other damage done, it would be policy to proceed as follows: Disconnect the valve rod and clamp the valve centrally on its seat; remove all the broken parts; remove the relief valve and cylinder cock from that

cylinder; and allow the main rod to remain up and the piston to travel back and forth in the cylinder. The main rods on such engines, it must be remembered, are very heavy to handle with the help that can be had, so that the best way is not to attempt to take them down, if it can be avoided. When the piston is allowed to travel in the cylinder, as described, it should be well lubricated to prevent the packing rings or the piston cutting the walls of the cylinder.

If time is of much importance and it is desired to clear the main line, all that it is necessary to do is to simply clear away the broken parts, without disconnecting anything (the other parts being uninjured), and proceed. The steam that is admitted to the front end of the cylinder will be wasted, of course, but the main line can be quickly cleared, which is a very important matter. In the event of the back cylinder head breaking, the rods on that side must be taken down, the crosshead blocked, and the valve clamped centrally on its seat.

BROKEN STEAM CHEST AND CYLINDER.

31. When a bad accident occurs to the steam chest and cylinder, the valve rod and the main rod on the disabled side should be removed and the crosshead blocked. Then loosen the steam-pipe joint on the disabled side and put a piece of sheet metal between the flat surfaces of the joint and the steam pipe, thus closing the opening in the steam pipe and preventing the steam from being wasted through the defective steam chest.

BROKEN MAIN CRANKPIN.

32. Whenever the main crankpin breaks, remove all side rods and the main rod on the disabled side. On some types of large consolidation engines, however, having very heavy main rods, the front end of the main rod may be left up, if the guide yoke is so constructed that the rod runs through it. In that event, only the back end should be disconnected, the crosshead being pushed all the way ahead and securely blocked there, allowing the back end of the main rod to ride on the guide

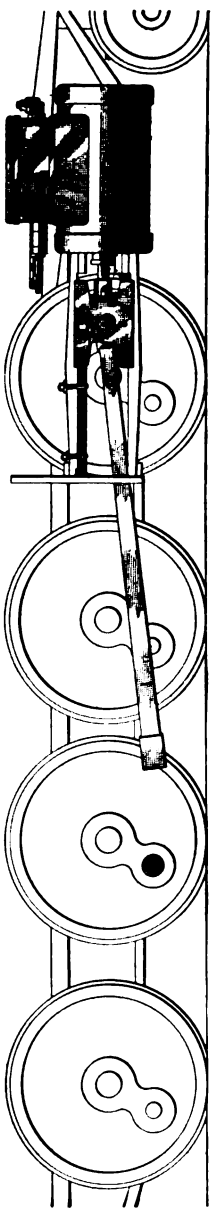

Fig. 17.

yoke, as shown in Fig. 17. In both of the above cases, however, disconnect the valve rod, cover the ports, and clamp the valve stem to hold the valve in that position.

BROKEN BACK-END MAIN-ROD STRAP.

33. When the strap at the back end of the main rod breaks, the piston usually goes through the front cylinder head, and very often the piston-rod packing gland is broken by being struck by the crosshead. Sometimes the crosshead strikes the front guide blocks hard enough to seriously damage the guides and the back cylinder head, or, the piston-rod key may be sheared off by the shock, in which event the piston is sure to go through the cylinder head. The crosshead is also liable to be broken, but will usually stand a harder knock than the parts already referred to. In disconnecting, take down the valve rod, place the valve centrally on its seat, and clamp the valve stem; then disconnect the main rod and block the crosshead.

BROKEN FRONT-END MAIN-ROD STRAP.

34. When the front-end main-rod strap breaks, the effect is about the same as when a back-end strap breaks. In disconnecting, it is always necessary to take down the main rod on the disabled side, disconnect the valve stem, and, covering the steam ports with the valve, clamp it there; then block the crosshead securely.

BROKEN GUIDE.

35. When a guide breaks, it usually means that whichever side of the engine the broken guide is on will have to be disconnected. Engines having four-bar guides can be run ahead with one of the bottom guides broken or gone, but it is not safe to back up with the guide in this condition. When an engine is working steam ahead, the crosshead is always held up against the top guides; but when it is worked backwards, the crosshead bears on the bottom guides. If the engine having a bottom guide broken is run backwards, there is great danger of bending the piston rod.

To disconnect for a broken guide, disconnect the valve rod, place the valve in a position to cover the ports and fasten it there, take down the main rod and block the crosshead. Remove or block open the cylinder cock back of the piston, as in other cases.

BROKEN CROSSHEAD.

36. In the event of a broken crosshead, the main rod should be removed, and if the crosshead is not totally destroyed, and there is enough left to block, the remaining part should be pushed to the back end of the guides and securely blocked there. Then disconnect the valve rod, cover the ports with the valve, and clamp the valve stem to hold the valve in position. If the crosshead is broken so that it cannot be blocked to prevent the piston moving, the piston should be moved to the back end of the cylinder and the valve should be clamped on its seat in such a position as to admit steam into the head end of the cylinder to keep the piston from moving. Take out the back cylinder cock so as to prevent any steam pressure accumulating between the piston and back cylinder head.

BROKEN REVERSE LEVER.

37. If the reverse lever should break, the engineer loses all control of the reversing apparatus, and the train must be handled entirely by means of the throttle and the brake. When this accident occurs, the weight of the links and eccentric rods causes the links to drop into the forward motion,

so that if it is desired to run backwards, the links must be raised to the proper position. If the reversing arm of the tumbling shaft extends through the running board, as in many makes of engines, it can be blocked in the proper position by fitting a small block in the slot of the running board on each side of the tumbling-shaft lever, to hold it in position. If the lever does not extend through the running board, the reach rod should be disconnected, if necessary, and a block fitted into the link slot of the proper length to hold up the link the desired height.

If it is desired to run the engine forwards, the links should be raised to the proper height for handling the train to the best advantage, and a block fitted into the slot of one of the links above the link block. Do not block both links; block only one, and the best results will be obtained. This method of blocking may be used in case the reverse-lever, reach rod or its lift-shaft arm is broken.

Another way of holding up the link is to put a bar across the top of the frames under the tumbling-shaft arms, then secure the bar to the frames, and the tumbling-shaft arms to the bar with bell cord or a chain. This method can be used to advantage on some makes of engines and will save time.

THROTTLE DISCONNECTED AND OPEN.

38. Whenever an accident occurs to the throttle or its attachments that prevents it from closing, it produces a very dangerous state of affairs and one that requires prompt action on the part of the engineer and fireman. The steam pressure in the boiler must be reduced as soon as possible, so that the engine can be handled by means of the reverse lever and the brake. The reverse lever should be moved to the center of the quadrant and the brakes applied to stop the train, or at least to get it under perfect control; then the injector should be put on, and the safety valves, steam-heat valve, or any other valves on the engine that will assist in reducing the steam pressure in the boiler, should be opened. The fireman should close the ash-pan dampers, open the fire-door, and, if necessary,

knock a hole in the fire to assist in reducing the boiler pressure to a point that will permit of the reverse lever being handled by the engineer—say, 100 pounds, or even less. Notify the train crew of the condition of the engine so they may render assistance in handling the train if necessary. The lubricator should be adjusted to feed the valves liberally so as to make them handle easily, and the engine and train should be taken, by means of the reverse lever and the brake, to the nearest point where the engine can be exchanged for another one, or where it can be prepared to be towed in. Make all stops by placing the reverse lever in the center notch and then applying the brake.

THROTTLE DISCONNECTED AND CLOSED.

39. In the event of any part of the throttle valve gear breaking or giving out, the pressure of the steam on the upper face of the valve will usually close the valve, and it cannot be opened again until the dome cap has been removed and the trouble repaired. A disconnected throttle may be caused by any of the bolts or pins of the bell-crank breaking or working out; by the breaking of the lug on the throttle stand pipe to which the bell-crank is pivoted; or to the throttle rod, throttle stem, or throttle link, breaking.

Whether the dome cap should be removed and the throttle connected up will depend on conditions. If the road is a busy one and traffic will be seriously delayed, probably the best plan will be to protect the train, send for help, and disconnect, so as to be ready to be towed in. It should be remembered that towing an engine with the throttle disconnected and closed and steam up and lubricator in working order, is similar to drifting down a long hill; therefore, unless the rules of the road demand that an engine in this condition be disconnected, it is not necessary. If conditions will permit, however, of the other course being pursued, proceed as follows: Knock out the fire, or bank it deeply with fresh wet coal, relieve the boiler of all pressure, remove the dome cap, and connect the disconnected parts if it can be done. Then replace the dome cap and fire

up again. If repairs cannot be made, remove the valve entirely and try to get in, as in the case of a throttle disconnected and open. Before relieving the boiler of pressure, care should be taken that there is sufficient water in the boiler with which to fire up again when repairs are made, and it is well to fill the boiler well up before attempting to relieve the pressure.

HOLE KNOCKED IN BOILER.

40. It is very seldom that a hole is knocked in a boiler. Sometimes, however, when an eccentric rod or strap breaks on engines that have the main driving axle close to the firebox, the broken parts get between the eccentric and the boiler and punch a hole through the sheet. When, from any cause, a hole is knocked into a boiler, the engine not only becomes useless at once, but it is also in great danger of more serious damage, and prompt measures must be adopted to protect it. A large hole in the outer shell will soon let the water out of the boiler, and great care must be taken to protect the firebox sheets so that they will not become overheated. If the grates are such that the fire can be dumped, do so without loss of time; but if the fire cannot be dumped, smother it with fresh wet coal as quickly as possible, afterwards killing it with water, first closing the ash-pan dampers.

41. Extra Precautions for Cold Weather.—In cold weather the tank, the lubricators, and all pipes must be drained so as to prevent damage from frost. If the engine has only a short distance to be towed in, it will not be necessary to disconnect, provided the cylinders and steam passages are drained, and the cylinders and valves can be kept oiled. This can easily be accomplished by putting oil in at the relief-valve openings occasionally while the engine is moving. A little graphite introduced through the release valve openings every few miles will assist very materially in lubricating the cylinders and valves. It is a good plan to take out the relief valves, as the air is thus given a better chance to flow into the steam chests, thereby greatly reducing the vacuum that is formed. On large compound engines of the Richmond type,

which have overpass valves on the low-pressure side, remove the caps from the ends of the overpass valve chamber and take out the valves; then the air can flow freely in and out of the cylinder through this channel. If this is not done, the cylinder may be heated considerably by the air being churned back and forth from one end of the cylinder to the other.

POP-VALVE OR WHISTLE BLOWN OUT OR BROKEN OFF CLOSE TO DOME.

42. Should the pop-valve or whistle be blown out, or broken off close to the dome, immediately start the injectors and keep them working as long as possible; close the ash-pan dampers, and watch the water glass closely; if there is danger of the water getting too low, bank the fire, or dump it, so as to protect the crown sheet. When the boiler has been relieved of all pressure, plug the opening made by the blown-out valve or whistle so as to make it steam-tight. To do this, take a piece of dry wood (the drier the better) and make a plug about a foot long and slightly larger than the opening into which it is to fit. Taper the plug slightly for about 6 or 7 inches, and then drive it into the opening, so that only about 1 inch projects beyond the outside of the dome cap. Then drive several nails into the plug. The nails will spread the wood and force it into the threads of the dome cap and also will cause the wood to form a sort of shoulder inside the cap that will resist the plug's removal. Besides which, the moisture inside the boiler will cause the wood to swell and thus make its removal still more difficult. A better way is to split this plug in four pieces, tie a string to each piece, and let them separately through the hole; when drawn up into the hole and placed together as before being split, the larger end of the plug will be inside the dome, and the plug cannot blow out. After plugging the opening, ascertain whether there is sufficient water in the boiler to protect the parts, and if so, fire up and proceed.

Another way to handle an accident of this nature is to drive a wooden plug into the hole and secure it there by means of a lever laid across the plug and tied down, at both ends, to the hand rails or some other parts of the engine.

BLOW-OFF COCK BLOWN OUT OR BROKEN.

43. Whenever the blow-off cock is blown out or broken, there is not much time in which to think of what should be done. One should know beforehand what to do, and then do it quickly when the time for action arrives. The injectors must be started immediately, and the fire knocked out as quickly as possible, if the engine is fitted with dumping grates; if not, close the ash-pan dampers and bank the fire with fresh wet coal. This must be done to protect the firebox sheets, as the boiler will quickly be emptied of water. The proper authorities should then be notified, and the engine made ready to be towed in.

If it is desired to fix up the engine so as to bring her in under her own steam, and the blow-off cock is broken off in such a way that it cannot be used again, the hole can be stopped with a wooden plug as follows: Cut a wooden plug that will snugly fit the hole; then split the end of the plug that is to enter the hole, make a wedge the width of the diameter of the hole and long enough to rest against the inside sheet, then place the end of the wedge into the split end of the plug and put the wedge against the inside sheet, so that when the plug is driven in, the wedge will spread the inside end of the plug in such a way as to cause it to resist being forced out of the hole. In many cases a washout plug will fit this opening, and if a spare one is on the engine, it should be used. The boiler may then be filled and fired up and run to the shop under low pressure.

BROKEN OR BURNED-OFF GRATE BARS.

44. To avoid delaying the train when the grate bars are broken or burned off, close the hole by building up from the bottom of ash-pan with old fish-plates, coupling links, or flat stones. In the event of a deep hopper-shaped ash-pan being used, pull the fire back from the burned section of the bars and close the hole by throwing some fish-plates in the firebox and working them crosswise over the hole with the fire-tools; then cover this over with fire and proceed. If the fire has to be cleaned again before the terminal is reached, care must be taken

not to disturb the plates over the hole. If the engine is an anthracite-coal burner, the hole can be stopped by throwing large lumps of "boney" coal over the hole and covering them with live fire. By means of this scheme, the hole can very often be stopped effectually from one fire cleaning to another. On arriving at the terminal, however, the grate should be reported so that repairs can be made.

BROKEN FRAME.

45. Whether an engine will have to be disconnected or not, in case its frame should be broken, will depend on the location of the fracture. If only the pedestal jaw of the frame breaks, it is hardly ever necessary to do anything, and the train may be taken to its destination without disconnecting. A break of this kind is often repaired in the shop by merely fitting and bolting a heavy iron plate over the fracture. If the frame breaks between the main driving box and the cylinder, or if the top rail breaks at any point, that side of the engine must be disconnected, and the engine should be run in light under her own steam. It is a mistake to try to handle part of the train under such conditions, for the reason that every time steam is admitted into the back end of the cylinder on the opposite side, it causes the break to open up. The frame on the unbroken side is, therefore, subjected to a springing strain that may lead to the breaking of that frame also. When the pedestal brace or bolt on the the main box is broken, remove the corresponding part from the back jaw and replace the broken one with it. This takes a good part from a jaw where the strain is less, and makes the main pedestal solid again. In the case of a bottom rail breaking, it is not necessary to give up the train or disconnect the engine. If the key that holds the cylinders fast in the frame works out, it should be replaced at once; if this cannot be done, disconnect as for a broken frame. Another thing to keep in mind, if the engine is to be towed, is that when an engine is in a train and is being towed, the frames have to stand the strain of pulling whatever is back of the engine; if the frame is broken, this strain may result in

serious damage being done. An engine with a broken frame should not be towed in a long train if it can be avoided, because if the broken engine is placed near the head end of the train, there is too much weight behind it; if placed near the rear end, the shocks caused in starting the train are liable to cause further damage.

BROKEN WEDGE BOLT.

46. If a wedge bolt happens to break below the nut that is above the pedestal brace, the bottom end of the bolt, in most cases, will drop out and be lost, and the wedge will soon work down and allow the box to pound in the jaws. About the only thing to do under such conditions is to pry up the wedge to its proper place and tighten the nut on the bolt that goes through the jaw. Then screw the wedge-bolt nut down on the binder and drive a hardwood wedge between the nut and the pedestal in such a manner that it will keep the nut from turning. This will usually keep up the wedge, and engines have been run for weeks with wedges held in this way.

Should the wedge bolt break between the upper nut and the lower end of the wedge, splice the bolt by screwing the upper nut until one-half of it is on either side of the break; then put a washer one-half the thickness of the nut between the nut and the pedestal brace to hold the wedge in its usual position. When the wedge bolt is broken in such a way that no use can be made of it, a nut can often be found that will fill the space nicely between the wedge and binder, and that can be kept in place by means of a piece of wire fastened to the pedestal. If the wedge bolt breaks and the wedge sticks up, it can usually be brought down by running the wheel that is just forward or back of it over something (a large nut, for instance) that will raise it off the rail a short distance.

BROKEN DRIVING BOX OR BRASS.

47. An engine may sometimes be run for a considerable distance with one or more of the driving boxes broken, and no bad results follow, although it is poor policy to run one under such conditions unless in emergencies or in a case of necessity.

Driving boxes usually break near the lower edge of the brass or between the brass and the cellar, and in case only one side breaks, the cellar and cellar bolts will hold the detached part of the box in nearly its proper position. This will cause the box to pound, and, if it is allowed to run in this condition any length of time, the other side of the box is liable to break in the same way. As long as the unbroken part of the box extends down as low as, or a little lower than, the bottom edges of the brass, there is very little danger of any harm being done, and it is safe to handle a full train.

If the brass itself breaks, the engine may be run to the end of the trip without much injury, provided the broken parts remain in position; but in nine cases out of ten the journal will run hot and the weight will have to be taken off the box. This can be done, where overhung springs are used, by running the wheel on a wedge and fitting a block of wood between the under side of the spring saddle and the frame. When the wheel is run off the wedge, the block will keep the spring saddle from resting on the box. Where an underhung-spring gear is used, run the wheel having the broken box up on a wedge, chain up the ends of the springs, or equalizers, nearest the box, or block down the far ends of the equalizers, and when the wheel is run down off the wedge, the weight of the engine will be carried by the other boxes.

If a main driving box should break on a ten-wheeler, and let the brass drop into the cellar, the best thing to do will be to take both the weight of the engine and the weight of the box off this journal. If this accident occurs some distance from the terminal, about the best thing to do is to swing or carry that wheel. To do this, run the wheel up on a thick wedge and block between the top of the frame and the spring saddle, or chain up the ends of the equalizers, as the case may be, so that when the wheel is run off the wedge, all the weight will be taken off the box. Before running the wheel off the wedge, however, take out the oil cellar and brass and fit a block of wood between the pedestal binder and the bottom of the driving box, and another in place of the oil cellar to carry the box and wheel. Then run the wheel off the wedge and let the journal

rest on the block of wood. Put some waste on the block around the journal and oil it well, so as to keep the journal lubricated. The object in carrying the wheel off the rail is to have all the weight of the axle, wheel, and rods carried on the block by the pedestal brace. Eight-wheelers, moguls, or consolidation engines may be treated in the same manner, always remembering that the spring and equalizing gear must be blocked in such a way as to keep the weight off the defective box.

BROKEN AXLE ON FOUR-WHEELED ENGINE TRUCK.

48. If an axle on a four-wheeled engine truck should break, jack up the front end of the engine high enough to take the weight off the truck; then raise the truck frame and the box with the broken axle parallel to the one on the opposite side, and

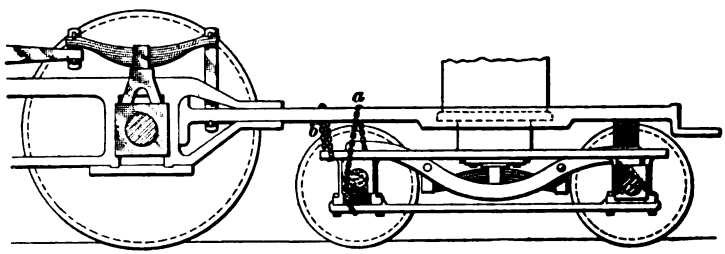

FIG. 18.

put a block under the journal box on the stay-plate or pedestal (see Fig. 18) that is thick enough to hold the box in that position. The journal-box and truck frame can be raised by placing a jack under the journal. Chain the truck in position by means of a chain (marked *a*) wound around the main frame rail and the stay-plate, passing the chain between the stay-plate bolts, as shown, to prevent its slipping off. Then fasten another chain (marked *b*) around the corner of the truck frame nearest the broken axle and the engine frame on the opposite side of the engine, to prevent the back end of the truck from swinging far enough to allow the hind truck wheel to drop off the rail. A block should then be placed between the top of the front end of the equalizer on the disabled side and the engine

frame, as shown in the figure. In case the front axle breaks, chain and block in a similar manner. The jack can then be removed and the engine carefully run to the terminal.

With a rigid center, when the engine center casting breaks, block across under the truck frame and broken center and over the equalizers from one side to the other, as shown in Fig. 19, with pieces of rail or anything that can be gotten in and will carry the load. Or, you can put solid blocks on each side under the engine frame nearest the cylinder saddle and on top

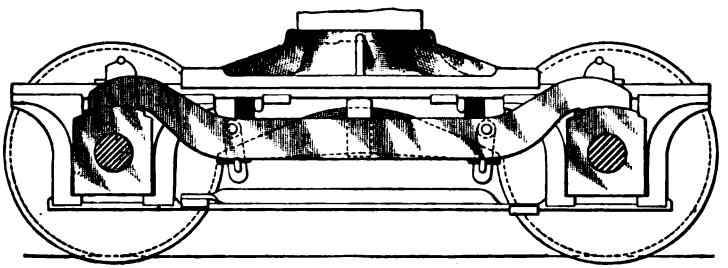

FIG. 19.

of the truck frame. This will give you the use of the engine-truck springs. This last method is applicable, also, to swing-motion trucks.

BROKEN TENDER-TRUCK WHEEL.

49. When the tender-truck wheel breaks, if no other damage is done, turn the wheel on the rail so as to have the good part of the tread on the rail. If the truck frame is of the "diamond" style, take a short piece of rail, or a small tie, and run it across the top of the stay-plates, or bottom pedestal-bolt braces, from one side to the other so that the broken part of the wheel will catch on the tie, or rail, as the case may be, and skid the wheels. The engine can then be taken carefully to where the wheels can be replaced. If the wheels have spokes, an iron bar can be used to better advantage than the tie, the rail being placed through the spokes.

If a Fox truck is used, the wheel may be so blocked as to skid, by cutting a short block, say the end of a tie, and placing it on the bolster-plate flange behind the wheel, allowing the broken

part of the wheel to rest against the block, and thus be prevented from turning. If the tender has to be hauled any distance in this condition, the weight should be reduced to save the skidding wheels as much as possible so that the wheel will last until the terminal is reached. This may be done by carrying as little water and coal as can be gotten along with. When a tender is blocked up in this fashion, the engine should proceed cautiously and slowly, as otherwise a bad wreck may occur. The proper thing to do is to proceed to the nearest place at which the wheels can be replaced, and avoid blocking the main track and delaying the traffic.

BROKEN TENDER-TRUCK AXLE.

50. If an axle in the tender truck breaks, proceed as follows: Raise that end of the tender to position and block between the top of the boxes of the good axle and the bottom of the tender frame so as to keep it there; then chain the disabled end of the truck to a cross-tie placed across the tank.

BROKEN TENDER-COUPLER CASTING.

51. Many tender frames are so constructed that when the tender coupler breaks it is a difficult matter to rig up a device behind the tender that will pull a train. If the frames are made of channel iron, the following arrangement may be used: Loop a chain around the back center casting allowing it to pass out under the back end of the tender frame and couple it to a single link in the car coupler. If this is not practicable, chain from the deck of the engine through under the tender to a single link in the front car coupler. A steel tail rope comes handy for this purpose. The engine should be turned so as to run backwards at the first opportunity to avoid further detention in case the chain should break.

BREAKDOWNS PECULIAR TO PARTICULAR TYPES OF ENGINES.

EIGHT-WHEELED ENGINES.

BROKEN SIDE ROD OR BACK PIN.

52. In the event of either a broken side rod or a broken back crankpin, no other damage being done, it will be necessary to remove the side rod and its mate on the opposite side. The train, or as much of it as can be hauled, can then be brought in by means of the two main drivers, since the main rods are still up.

BROKEN TIRE ON FRONT DRIVER.

53. If the tire breaks on the front driver of an engine having overhung spring rigging, it will be necessary to raise the wheel the thickness of the tire above the rail and carry it in that position after relieving it of the weight it carries. To block up for an accident of this kind, proceed as follows: Run the wheel with the broken tire up on a wedge, until it has been raised 4 or 5 inches, and place an iron block between the top of the frame and the spring saddle, as shown in Fig. 20. Remove the oil cellar and fit a block of wood in its place (the grain of the wood running parallel with the axle), and fit another block between the bottom of the driving box and the pedestal brace. The two blocks between the pedestal brace and the axle are intended to carry the weight of the wheel and the box; whereas, the block between the top of the frame and the spring saddle relieves the box of its load. It is necessary to so relieve the box, for the reason that otherwise the pedestal brace would be required to carry the weight of both the wheel and the box, and also the weight that the box usually carries, and the result would be a broken pedestal brace and still more trouble. The space around the driving axle should be filled with waste well saturated

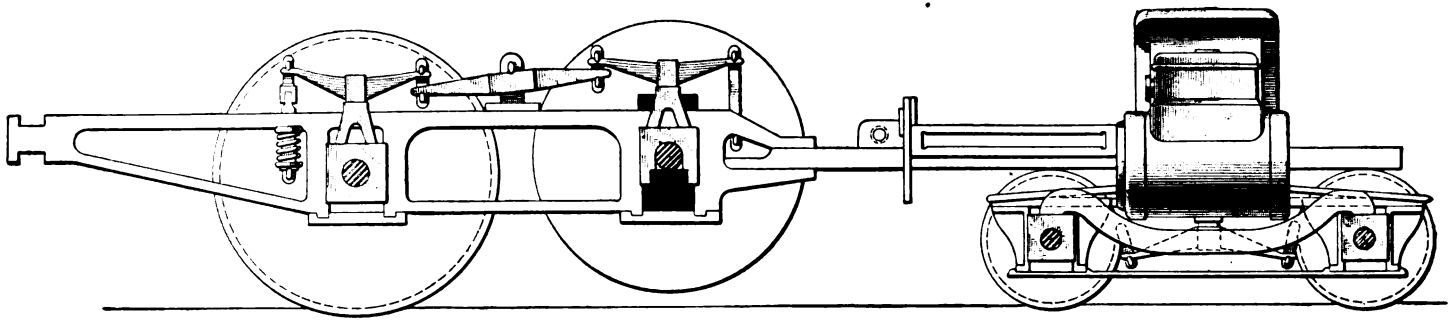

FIG. 20.

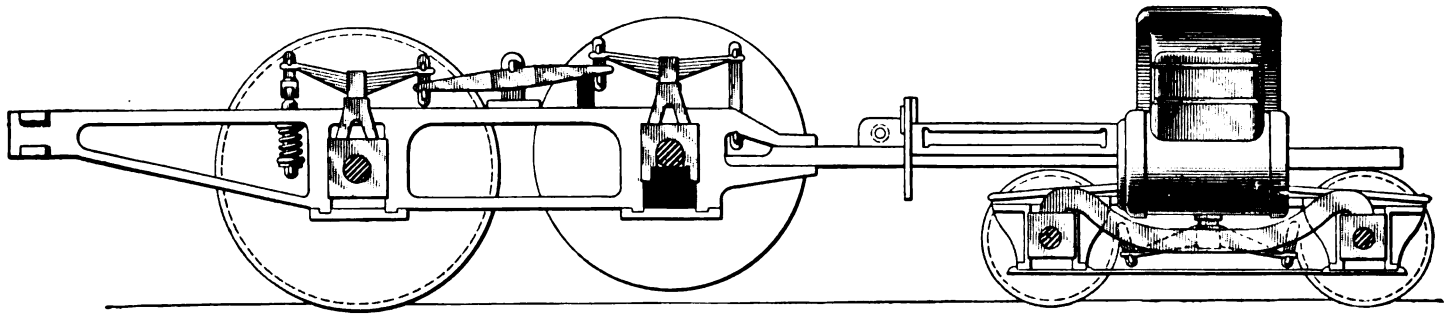

FIG. 21.

with oil, so as to provide lubrication for the journal as it turns on the wooden block, and care should be taken to keep this box well oiled. Remember that in placing a block over a driving box, the oil holes must be left unobstructed so that oil can get to the journal freely, as boxes blocked up are liable to run hot even when well lubricated.

Blocking for a broken tire in this manner gives the use of both springs. Of course, the box that is blocked up gets no benefit from its driving spring, but when the weight is transferred from the box to the frame, by means of the block between the frame and the spring saddle, no extra strain is thrown on any one part of the spring rigging.

If, when the tire breaks, the side rod is so injured as to necessitate its removal, its mate must, of course, be taken down; but if the side rod is uninjured, there is no reason for their removal. The driver brake, however, must be cut out in all cases of this kind.

54. Another method of blocking an eight-wheeled engine having overhung driving springs, in the event of a broken front tire, is shown in Fig. 21. In this method, the wheel is run up on a wedge, and blocks placed in the oil cellar and between the bottom of the box and the pedestal brace, as in the previous case. To relieve the box of its weight, however, a block is placed between the end of the equalizer nearest the injured wheel and the top of the frame, as shown. By this means, the front driving spring is cut out and severe strains are placed on the equalizer, equalizer post, and post bolts, which may result in a broken equalizer or equalizer post. This method, however, can be used to advantage in cases where the front driving spring has been injured in such a way as to prevent its carrying its load safely. If the spring or hangers are not injured, the first method is preferable to this. But the driver brake must be cut out in either case, and if the side rods are injured, they must, of course, be removed.

Fig. 22 shows a method of blocking an eight-wheeled engine having underhung spring rigging, should a front tire break. In this case, also, the front wheel is run up on a wedge, and blocks

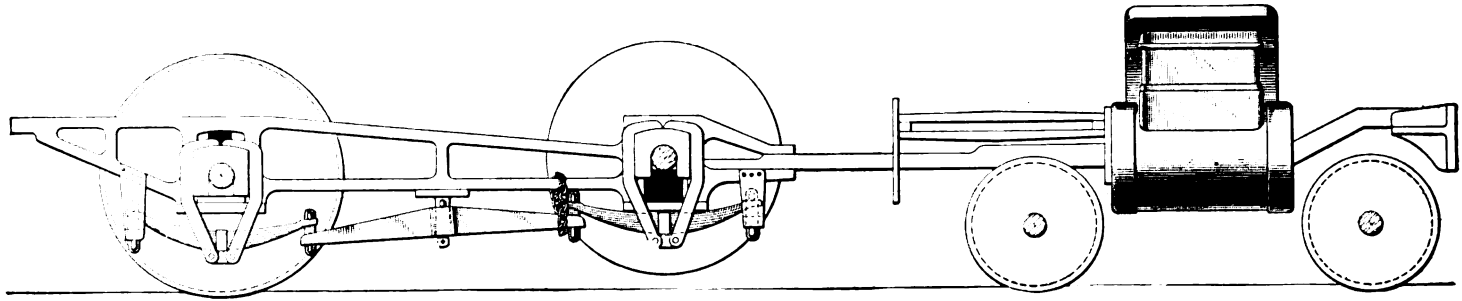

FIG. 22.

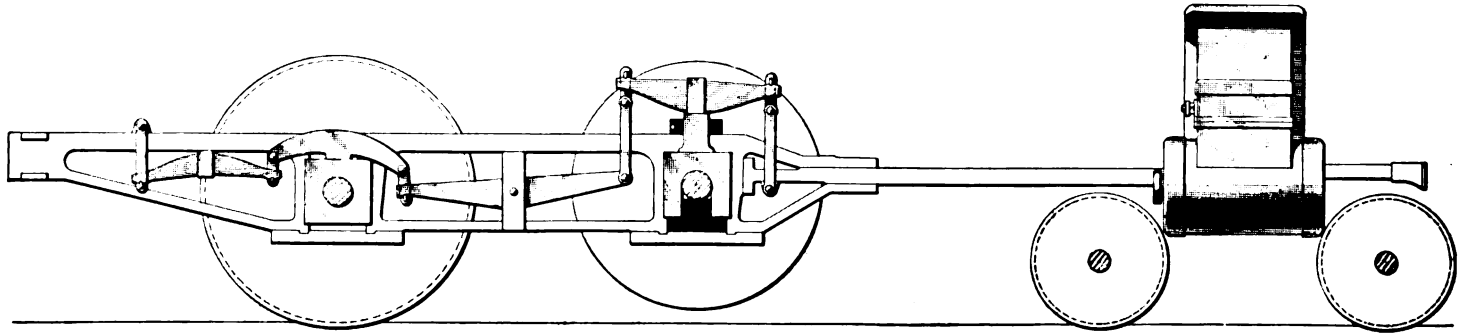

FIG. 23.

fitted in place of the oil cellar and between the bottom of the driving box and the pedestal brace, as before; with this style of spring rigging, however, it will be necessary to either chain up that end of the equalizer nearest the injured wheel, as shown in the figure, or, if no chain is at hand, block down the back end of the equalizer by means of a block placed between the bottom of the frame and the top of that end of the equalizer. Also block over the back driving box. The driver brake must be cut out, and if the side rod is injured, it and its mate must be removed.

55. Two methods of blocking an eight-wheeled engine having the equalizer between the frames are shown in Figs. 23 and 24. The method of blocking shown in Fig. 23 permits the use of the front driving spring, and therefore is the preferable method, provided the front spring is in condition to carry its load safely. If this spring is so injured, however, as to make it unsafe, the second method of blocking had better be used, for then the spring is cut out of service. With either method, the driver brake must be cut out and the side rods removed, if sufficiently injured.

BROKEN TIRE ON BACK DRIVER.

56. If, on an eight-wheeled engine, the back driving tire should break, it should be blocked up in exactly the same manner as the front tire would be; that is, the wheel with the broken tire should be run up on a wedge and blocks fitted in place of the oil cellar and below the box, as already explained; also, an iron block should be placed between the top of the frame and the spring saddle, if the spring will carry its load properly, but if it will not, the block should be placed between the back end of the equalizer and the frame, and also one over the forward driving box. If the engine has underhung rigging, the back end of the equalizer must be chained up, or else the front end of the equalizer blocked down. The driver brake must, of course, be cut out, and if the side rods are sufficiently injured, they must be taken down.

With the back tire gone, be careful in passing over frogs and switches, as there is nothing to keep the good back tire from leading into the point of the frog. Chain across from the step on the engine deck on the disabled side to the tender frame on the other side; this will hold the good flange against the rail.

BROKEN FRONT AXLE.

57. In the event of the front axle on an eight-wheeled engine breaking outside the driving box, block up in exactly the same manner as you would in the case of a broken tire, except that the oil cellar need not be removed. When an axle breaks, however, it will be necessary to take down both side rods and the main rod on the side of the broken wheel, and as there is no wheel to run up on a wedge, the broken end of the axle will have to be jacked up to position before blocking. The driver brake must be cut out. In this case, it will be necessary to proceed with simply the engine, as only one driver out of the four is in service. If the axle is broken between the boxes, it will be necessary to block up both wheels and be towed in.

BROKEN BACK AXLE.

58. In the event of the back axle on an eight-wheeled engine breaking outside the driving box, block up as you would for a broken back tire, without removing the oil cellar. In this case, however, the side rods must come down, and it will be necessary to jack the broken end of the axle into position before blocking. The driver brake must be cut out. The engine, and as much of the train as can be hauled with the two front drivers, can then be taken in.

BROKEN FRONT DRIVING SPRING OR HANGER.

59. In the event of the main spring on an eight-wheeled engine breaking, proceed as follows: Run the main driver up on a wedge so as to relieve the back spring as much as possible; then, by means of a pinch bar, pry up the front end of the equalizer until it is level, and block it there, as shown in Fig. 25. Then run the main driver off the wedge, run the back driving

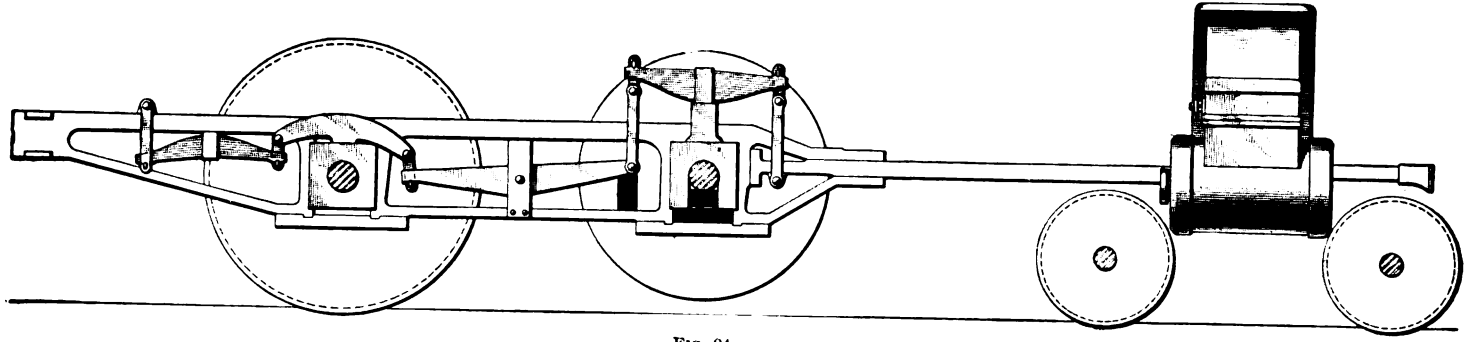

FIG. 24.

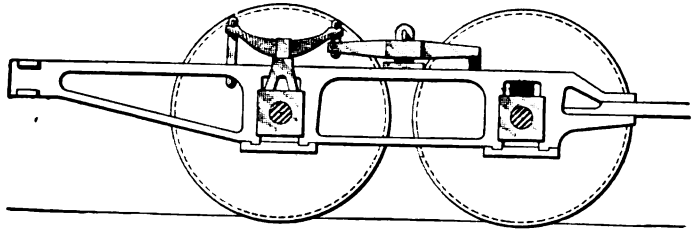

FIG. 25.

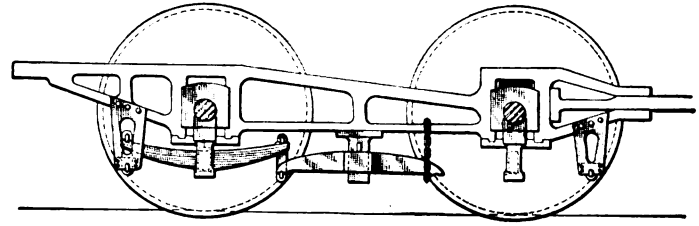

FIG. 26.

wheel up on the wedge, and put a block on top of the main box under the frames, as shown in the figure, so as to make the engine ride level; next run the engine off the wedge and slacken the main driving box wedge a little to prevent the box sticking in case it should become warm enough to expand and stick. See that this box has plenty of oil, and watch it when running, as it is liable to heat. Remove the broken parts if they are liable to get caught in anything, and you are ready to proceed.

Fig. 26 shows the method of blocking up an eight-wheeled engine with underhung spring rigging, in the event of the main spring breaking. In this case, a block is placed between the top of the main box and the frame, as before, but the equalizer, being below the frames, must be chained into position instead

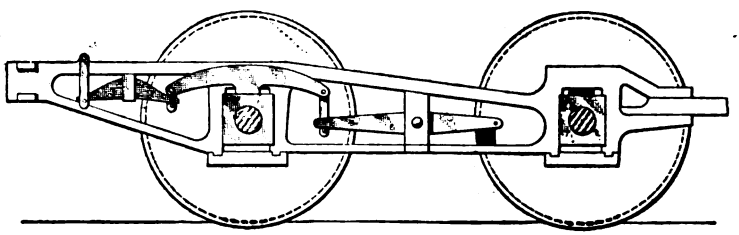

FIG. 27.

of being blocked up, as in the former case. Blocking the back end of the equalizer down serves the same purpose as chaining the front end up.

In Fig. 27 is shown a method of blocking an eight-wheeled engine (in the event of main spring breaking) having the equalizer between the top and the bottom bars of the frame, as shown. The only difference in blocking the above styles of spring riggings lies in the method of securing the equalizer.

BROKEN BACK DRIVING SPRING OR HANGER.

60. In the event of the back driving spring or spring hanger breaking on an eight-wheeled engine having overhung rigging, as in Fig. 28, run the back wheel up on a wedge to take the strain off the main spring, pry the back end of the equalizer up level and block it there; next run the back wheel

off the wedge and run the front driving wheel up on the wedge to raise the frame off of the back driving box; then put a block on top of the back driving box, under the frame, to carry the engine level. Slacken the back driving-box wedge a

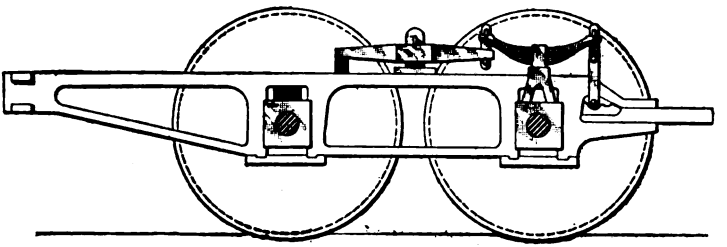

FIG. 28.

little, as in the case of broken main-driving spring, to prevent the box sticking, and oil the box freely.

In Fig. 29 is shown a method of blocking for a broken back spring or spring hanger in an engine having an equalizer between the top and bottom bars of the frame and another over the back driving box. To do this, raise the back end of the engine with jacks or by running the back wheel up on a wedge, to relieve the springs as much as possible; then pry the back end of the equalizer down until it is in its normal position; then insert a block of iron or hardwood between the back end of the equalizer and the top bar of the frame, as shown. Next

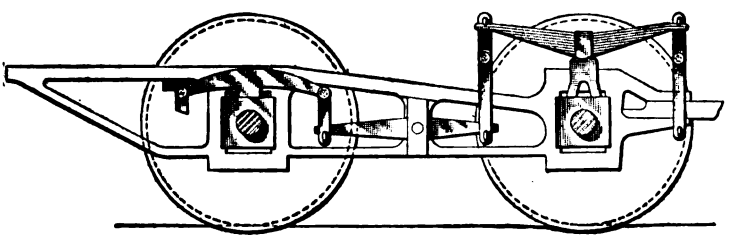

FIG. 29.

run the back driver down off the wedge and the front driver up on it to raise the frame above the back driving box, and block between the box of the back driver and the frame, taking care to leave oil holes open. Also oil the back box freely. This method of blocking gives you the use of the front spring.

BROKEN EQUALIZER.

61. In the event of the equalizer or equalizer post breaking on an eight-wheeled engine, that side of the engine on which it breaks will drop down until the frame rests solidly on the driving boxes. The thing to do in a case of this kind is to raise the frame on that side to its normal position and block between it and the driving boxes to hold it there. To do this, proceed in the following manner: Run the back driver up on a wedge until an iron block of the proper size to hold the frame in position can be placed between the front driving box and the bottom of the frame, as shown in Fig. 30. Running the back wheel up on the wedge causes it to take the weight off the front driver and raise the frame above the front driving box far enough so that the iron block can be put in position as indicated in the figure. After blocking between the front driving box and the frame, roll the back driver off the wedge and run the front driver up on it. This will cause the front driver to take the weight off the back driver and raise the frame far enough so that an iron block can be placed between the top of the back driving box and the bottom of the frame, as shown in the figure. The front driver should then be run off the wedge. If the spring rigging on that side is not properly secured so as to avoid further damage, take out the springs, and then proceed. Blocking both drivers in the manner indicated in Fig. 30 makes that side of the engine rigid, since it cuts out both the driving springs. The side rods need not be disconnected for an accident of this nature, neither is it necessary to cut out the driver brake, but the driving boxes on the side of the engine that is blocked up should be closely watched and should receive oil liberally, as they are liable to become hot.

MOGUL ENGINE.

BROKEN BACK SECTION OF SIDE ROD.

62. In the event of a broken back section of the side rod (the knuckle-joint pin being back of the main pin), remove that section and its mate, as previously explained. This will still leave the first and second pairs of drivers in good condition and in service.

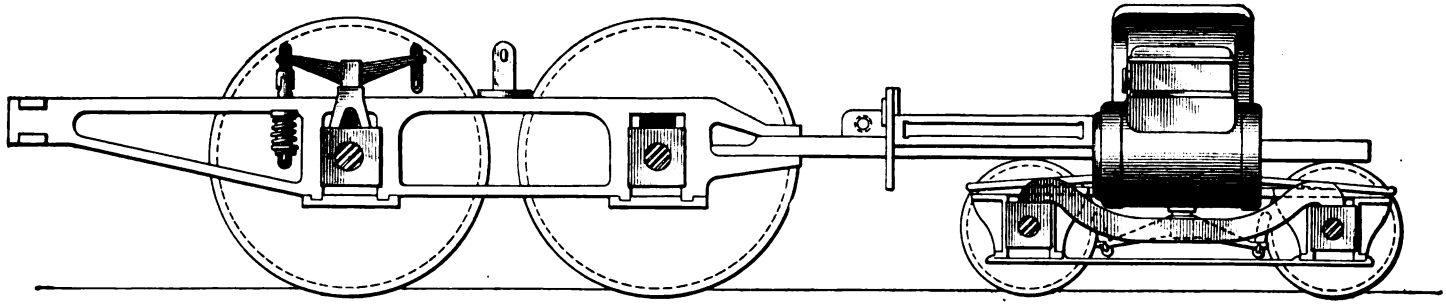

FIG. 30.

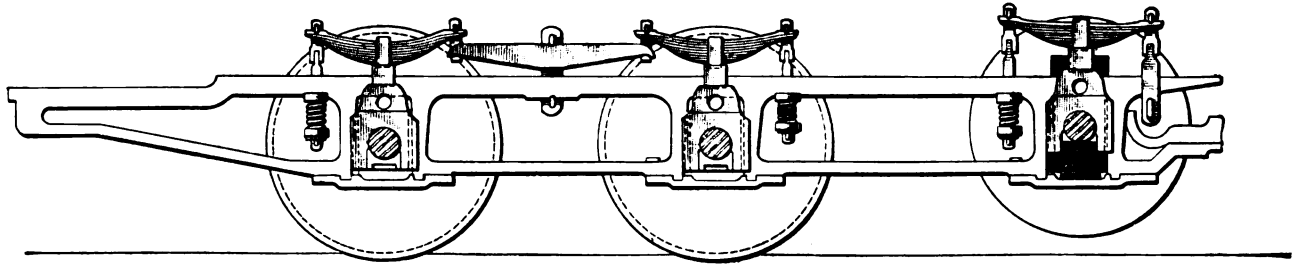

FIG. 31.

BROKEN FRONT SECTION OF SIDE ROD.

63. In the event of the front section of the side rod breaking (the knuckle-joint pin being back of the main pin), all side rods must come down and only the main drivers will be left in service. The train, or as much of it as can be hauled with only the main drivers, is then ready to proceed.

BROKEN TIRE ON FRONT DRIVER.

64. In the event of the front tire on a mogul engine breaking, run that wheel up on a wedge so as to raise it to about its normal position; remove the oil cellar and fit a block in its place and fill the space between the bottom of the box and the pedestal brace with another block, as shown in Fig. 31. Put waste in the space around the journal and saturate it well with oil; then put an iron block between the top of the frame and the spring saddle, as shown in the figure, to make the frame carry the weight that is usually carried by the box. Next, cut out the driver brake. If the side rods are uninjured, there is no reason why they should be taken down.

If the middle driver is flangeless, great care will have to be exercised in going around curves, for the reason that there will be no guiding flange on the first set of drivers, and since the truck wheel and the back drivers are the only guides, the first driving wheel is liable to drop off the rail. If, in your judgment, the wheel is apt to drop off the rail when on a curve, it will probably be well to swing the other front driver until you are on a straight track again, when it may be dropped on the rail and allowed to carry its load, or block the engine truck. In swinging this wheel, though, it is best not to swing it higher than will just allow it to clear the rail. To swing it, run it up on a wedge and block up, as in the case of a broken tire.

BROKEN TIRE ON MIDDLE DRIVER.

65. In the event of the main tire of a mogul breaking, run that wheel up on a wedge until it is in about its normal position; take out the oil cellar and replace it with a block, and block between the bottom of the box and the pedestal brace,

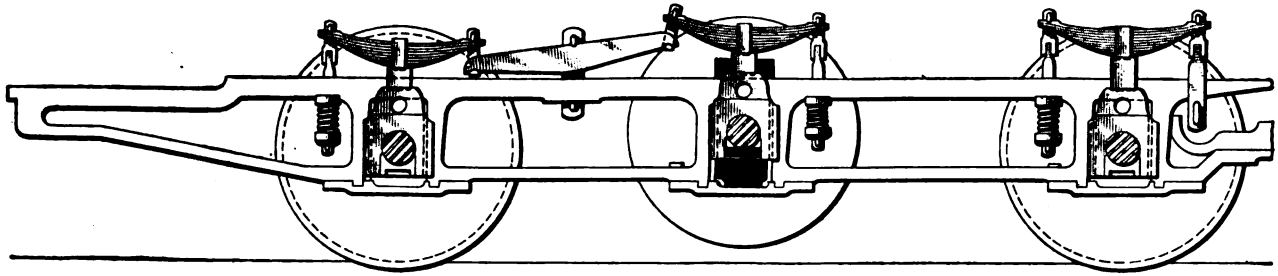

FIG. 32.

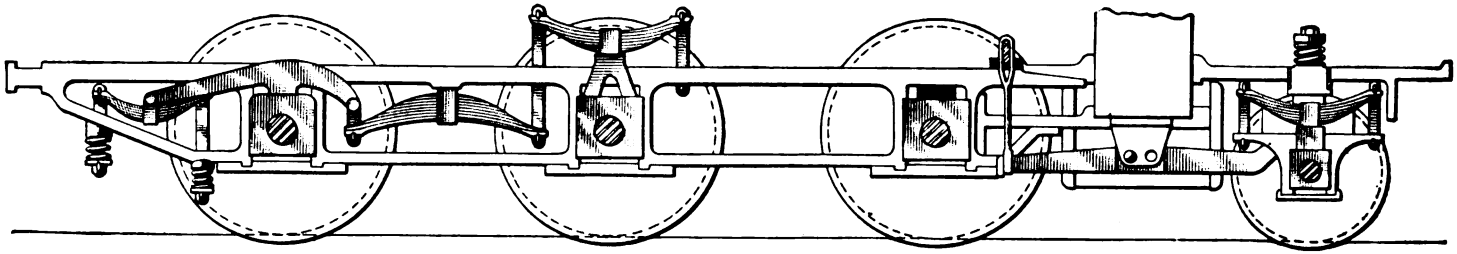

FIG. 33.

as shown in Fig. 32; then place an iron block between the top of the frame and the spring saddle to carry the weight off the box. This permits of the use of the middle driving spring. If it is found that the middle driving spring will not carry the weight satisfactorily, block up that end of the equalizer next to the broken wheel instead of blocking between the frame and the spring saddle; that is, put a block between the top frame and the end of the equalizer, as explained in connection with eight-wheeled engines. Cut out the driver brake and you are ready to proceed.

BROKEN TIRE ON BACK DRIVER.

66. When an accident occurs to the back tire of a mogul engine, swing that wheel and block it as in the case of the middle wheel; in other words, block below the driving box and in place of the oil cellar, and either block between the frame and under the spring saddle or between the frame and the back end of the equalizer. Then cut out the driver brake and proceed.

If the middle drivers have blind tires, this breakdown will not be so easily handled; in that event, there will be no guiding flange on either the middle or back driver on the broken side, and the result will be that the engine will have a tendency to drop off the track. To prevent this, fasten a stout chain to the back end of the frame on the side having the broken tire and secure the other end of the chain to the opposite side of the tender in such a way as will hold the back end of the engine over toward the side having the good rear driver; in other words, this chain should tend to crowd the engine over against the flange of the rear driver and thus guide the rear end of the engine. Proceed with great caution when thus chained up, looking out for frogs and switches that this flange may lead into.

BROKEN AXLE ON FRONT DRIVER.

67. Whenever the axle on the front driver breaks outside the box, it is necessary to remove all the side rods, while the driver brake must be cut out. After removing the side rods it will be necessary to remove the broken driver. This is a

difficult thing to do, especially on engines having the alligator type of crosshead. The driver may be removed, however, as follows: Disconnect the main rod on that side and push the crosshead to its forward position, in order to give as much space as possible between the guide yoke and the end of the crosshead; this will allow more space in which to work the wheel out of the way. Next, cut off the ends of two or three ties and dig a hole in the ground directly under the wheel, and sufficiently deep that when the wheel is dropped into it, the wheel may be worked from under the guides and out of the way. After removing the wheel, jack up the axle until it is in its normal position and block up between the bottom of the driving box and pedestal brace, and the oil cellar will carry the axle in the proper position; next block between the top of the frame and the spring saddle so as to relieve the box of the weight it carries. It should next be ascertained whether the crank of the front driver on the opposite side will clear the crosshead, since in some makes of engines it will not. If it is found that it will not clear the crosshead it will be necessary to swing that wheel also, placing the pin in such a way that it will clear the crosshead. To swing this wheel, block up in exactly the same manner as in case of a broken axle, only now the wheel can be raised by means of a wedge instead of by jacking up the axle. Care must be taken, when rounding curves, that the drivers with blind tires do not drop off the rails. The driver brake must be cut out.

BROKEN AXLE ON MAIN DRIVER.

68. In case of an axle on the main driver breaking outside of the box, it will be hard to say how much damage may be done. If no other damage is done, however, it will be necessary to take down all the side rods, and the main rod on the disabled side; also, to block the crosshead, disconnect the valve rod, and clamp the valve on the center of the seat, so as to cover the steam ports. Then remove the wheel, jack up the broken end of the journal until it is in its proper position, and fit a block below the driving box and the pedestal brace;

then block between the top of the frame and the spring saddle, if the main spring will carry its load safely, but if it will not, block between the end of the equalizer nearest the broken axle and the top of the frame. Next, cut out the driver brake. When thus stripped, the engine has only one main rod up and one driving wheel in actual service, so that the engineer cannot hope to do more than just take the lone engine into the terminal. It must be borne in mind, however, that the force exerted by the steam cylinder is now applied directly to one driver, instead of to the three drivers as when they were all connected; hence the throttle must be used very carefully or the driver will slip badly and catch on the center.

If the main drivers have blind tires and no collars on the axle, or, if the axle is broken between the boxes, it will be necessary to swing the good main wheel also, in which case it will be necessary to tow the engine in. Before doing this, disconnect the valve rod and clamp the valve in mid-position, and also block the crosshead. Then, raising the wheel until the box is against the top of the jaw, block in this position, and chain the wheel fast with the counterweight on the lower side; this is to prevent the wheel working out far enough to cause further trouble. If time is valuable and it is desired to get things out of the way as quickly as possible, so as to prevent obstruction to the main track, the links and eccentrics may be left up in each case, and the engine should be towed carefully to avoid further damage.

BROKEN AXLE ON BACK DRIVER.

69. When the back axle breaks outside the driving box and no other damage is done, remove both back sections of the side rods, remove the broken wheel, jack up the broken end of the axle until it is in its normal position, and block between the bottom of the box and the pedestal brace. Then block between the top of the frame and the spring saddle, or, if the spring will not carry its load, between the top of the frame and the back end of the equalizer. If the middle tire is a blind one, it will be necessary to fasten a chain around the tail-piece

of the engine frame on the disabled side, and then pass it across to the opposite side, secure to the front corner of the tender frame, and wedge it there as tightly as possible so as to crowd the flange of the wheel against the rail. The driver brake should be cut out and the engine run carefully to the shop. When rounding a curve, place a wedge between the tender frame and the engine frame, close to the drawbar on the side next to the broken wheel, so as to help guide the back end of the engine.

BROKEN FRONT SPRING, OR HANGER.

70. Should the front spring on a mogul engine having a spring rigging like that shown in Fig. 33, break, proceed as follows: The end of the cross-equalizer next to the broken spring will drop on top of the frame, and if this does not drop the long truck equalizer too low, it may be allowed to remain there. However, it had better be raised to position and a block placed between it and the top of the frame, as shown. This will carry the back end of the long truck equalizer. The truck wheel on the disabled side of the engine should then be run up on a wedge, to raise the frame on that side to the proper height; an iron block should then be placed between the top of the front driving box and the frame, as shown, to carry the weight rigidly on that box. The front truck may then be run off the wedge and the engine will be ready to proceed; but the box that has the block between it and the frame should be well lubricated, and closely watched, as a box blocked up in this fashion is very apt to run hot.

BROKEN MAIN SPRING.

71. When the main spring, or hanger, on a mogul engine having spring rigging like that shown in Fig. 34, breaks, the following plan should be used: Place a block between the top of the driving box and the frame on the front and back drivers so as to take up the play there and prevent the boxes rising in the pedestal jaws. Then run these two drivers up on wedges so as to raise the frame to its regular height above the main driving box, and block up this box by placing an iron block

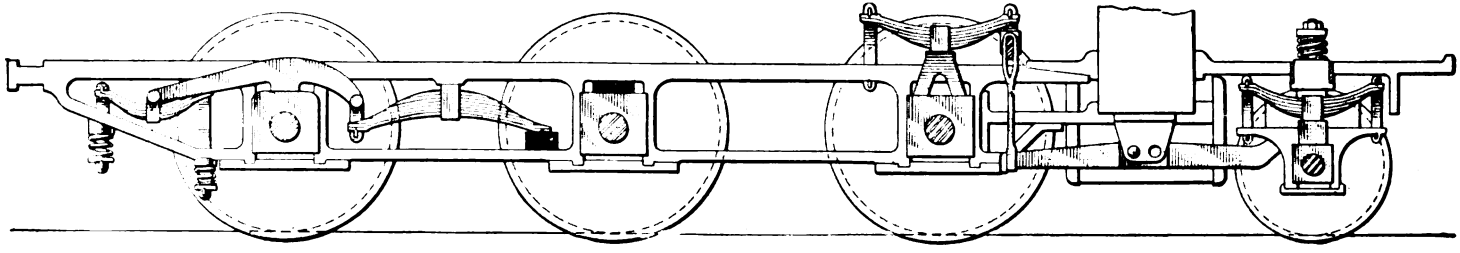

FIG. 34.

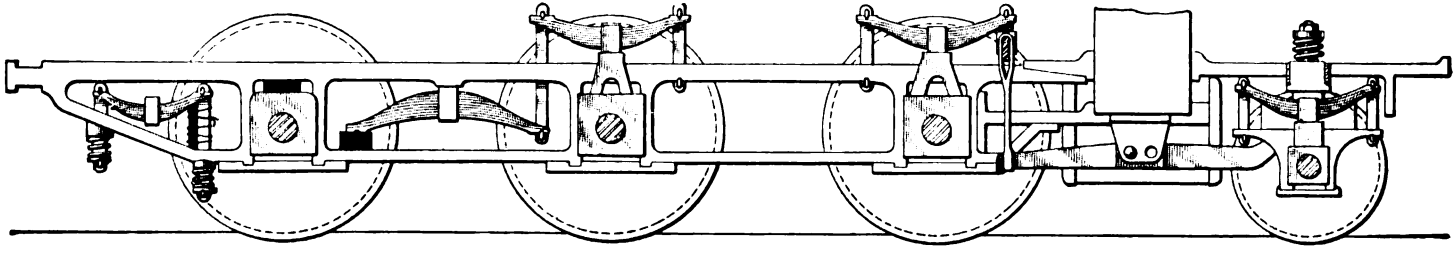

FIG. 35.

between the top of the box and the bottom of the frame. This will make the main driver rigid. Next, pry up the end of the spring between the frames that is next to the broken spring, and place a block between the end of the spring and the top of the bottom rail of the frame, as shown in the figure. Blocking like this relieves the broken spring and cuts it out of service. After blocking in this manner, run the drivers off the wedges and remove the blocking from above the front and back driving boxes, as otherwise the whole side of the engine would be carried rigidly on the boxes.

BROKEN INTERMEDIATE EQUALIZER.

72. In the event of an intermediate equalizer on a mogul engine breaking, the spring rigging being similar to that shown in Fig. 35, remove, if possible, the broken piece of the equalizer. Next, run the main driver up on a wedge, so as to raise the frame above the rear driving box, and thus permit the insertion of an iron block between the top of the box and the frame; then pry up the back end of the spring that is between the top and bottom rails of the frame and place a block between the back end of the spring and the lower rail of the frame; this will make the rear driver rigid on that side, but it will permit of the use of the other springs. Sometimes it is difficult, or even impossible, to remove the equalizer so as to permit of a block being placed on the rear box below the frame. In this event, simply block up the rear end of the spring, as already explained, and allow the main wheel to carry the overhanging weight. If the engine settles badly on this account, it may be necessary to block between the main driving box and the frame. Block the rear driving spring as shown in the figure.

BROKEN LONG EQUALIZER ON MOGUL.

73. When Break Occurs in Front of Fulcrum Bearing.—Just what to do in case the long equalizer that evenly distributes the weight between the front drivers and the truck of a mogul engine breaks, will depend on the position

of the break and also on the construction of the fulcrum bearing of the equalizer. On some engines the fulcrum is constructed as in Fig. 36, having two holes through the equalizer and the fulcrum-bearing casting for the purpose of changing the weight on the truck wheels. In case this equalizer breaks forward of the fulcrum bearing, the front piece should be removed or secured so that it can cause no trouble. The truck should then be blocked up solidly between the truck and frames by placing blocks on top of the pony truck-frame hangers directly under the frame of the engine, and it should afterwards be run up on wedges so as to raise the engine frame with respect to the front driving boxes. Jacks may be used for the purpose if at hand. This has the same effect as though the front driving wheel and its box were lowered in the jaw, and it eases the tension of the springs considerably. The back end of the equalizer should be pried down until it is possible to put another pin through the extra hole in the equalizer-fulcrum casting and equalizer bar, thus applying pins to both holes. By this means the equalizing bar is made rigid and will hold the cross-equalizer and the front driving springs in position. The truck wheels should then be run off the wedges. On engines having the equalizer constructed with only one bolt hole, probably the best thing to do would be to block between the front driving box and the frame on both sides so as to carry the frame rigidly on the front boxes. Another plan is to raise the front end of the engine frames and pry the front ends of the front driving springs down to position and chain the cross-equalizer to position by chaining around the engine frames.

74. When Break Occurs Back of Fulcrum Bearing.—If the break occurs back of the fulcrum, the front part may be left in position, as it can do no harm, but the loose broken pieces should be removed to prevent trouble. The quickest way of handling this breakdown is to run the front truck up on wedges, as before, or use jacks, so as to raise the frames sufficiently high above the front driving boxes, that when they are blocked in that position and the truck then run off the wedges, the front end of the frame will not bear down on the

truck enough to make it rigid. Then block the frame in this position by placing iron blocks between the top of the front driving box and the frame, on both sides of the engine; run the truck off the wedges, and proceed. The engine should be run carefully around curves, over frogs, switches, etc.

Another method of handling this accident would be to place a tie crosswise below the top bar of the rail, and chain the cross-equalizer to this tie, as shown in Fig. 36; by this means the front driving springs can be utilized.

Still another method is to block between the top of the cross-equalizer and the bottom of the boiler. When this method is used, the blocking must be in long pieces and placed lengthwise of the boiler so as to cover a large surface.

BROKEN FRONT PIN OF TRUCK EQUALIZER.

75. First Method.—In case the front pin, or "Aleck bolt," of a long truck equalizer on a mogul engine should break, raise the front end of the engine above its normal position (by means of jacks or otherwise) so as to raise the frames with respect to the front driving boxes, thus easing the tension of the front driving springs; next, jack up the front end of the equalizer and place a hardwood block, or, better still, a truck brass, if one can be obtained, on top of the truck axle and allow the end of the equalizer to rest on it, as shown in Fig. 37. This will cause the truck to carry its share of the weight as usual. The brass should be kept well oiled, however, to avoid undue heating. If a hardwood block is used, it is best to gouge out, if possible, the shape of the axle, so as to increase the bearing surface, and a flat piece of iron should be placed on top of the block between it and the equalizer. If the axle is kept well oiled where the brass rides on it, but little trouble will be experienced.

76. Second Method.—Another method of blocking up, in case the front pin, or "Aleck bolt," of the long truck equalizer breaks, is shown in Fig. 38. To block up in this manner, jack up the front end of the engine, either by means of jacks or by

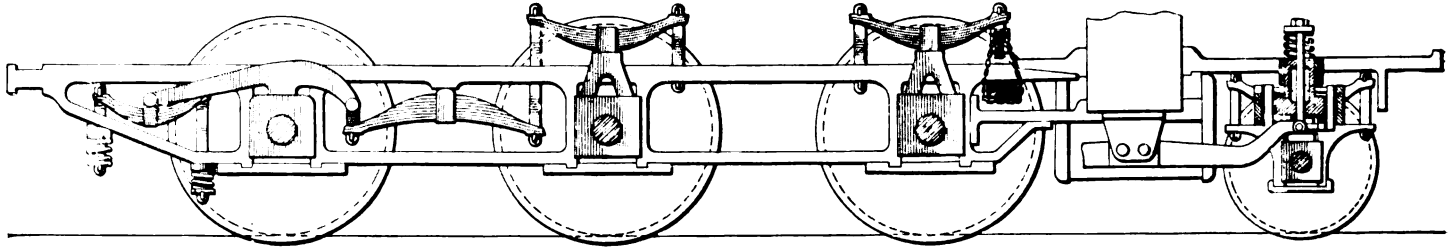

FIG. 36.

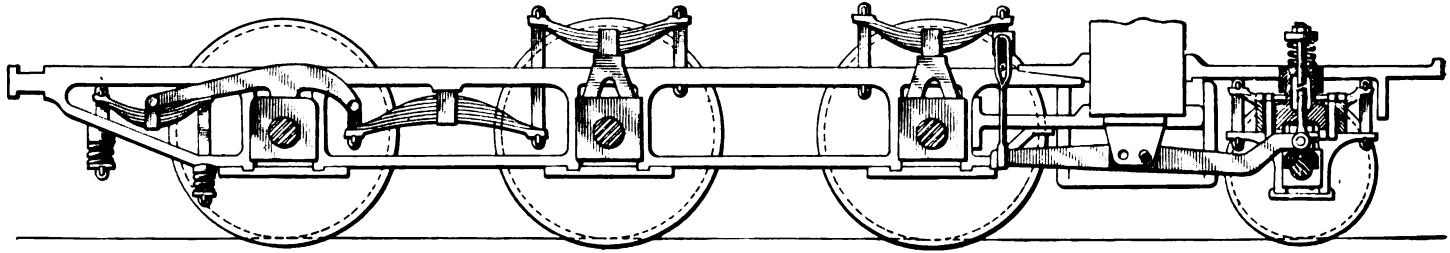

FIG. 37.

running the front truck up on wedges, or otherwise, so as to relieve the tension on the spring rigging; then jack up the front end of the long equalizer until it is a little above its normal position; place a tie, a short piece of rail, or anything that will stand the strain, across the front of the frame, as shown, and then chain the front end of the long equalizer to this tie. This will hold the front end of the long equalizer rigid, but will give the use of the front driving spring. The front truck, however, will be relieved of its share of the load, and is liable to get off the track.

ATLANTIC TYPE ENGINE.

BROKEN SIDE ROD OR FRONT PIN.

77. In the event of a side rod or the front crankpin of an Atlantic type engine breaking, proceed in exactly the same manner as you would if the side rod or back pin of a standard eight-wheeled engine broke. In other words, remove both the broken side rod and its mate, and proceed by using simply the main drivers.

BROKEN TIRE ON FRONT DRIVER.

78. If the tire on the front driver of an Atlantic type engine should break, proceed to block up in exactly the same manner as you would in the event of a back tire on an eight-wheeled engine breaking. Unless the side rod or front pin is so injured as to necessitate the removal of the side rods, they may remain up, but the driver brake must be cut out.

BROKEN TIRE ON MAIN DRIVER.

79. In the event of a back driving tire breaking on an Atlantic type engine, proceed as you would in the case of a tire breaking on a main driver of an eight-wheeled engine, and block up as shown in Fig. 39. Care should also be taken to see that the driver brake is cut out.

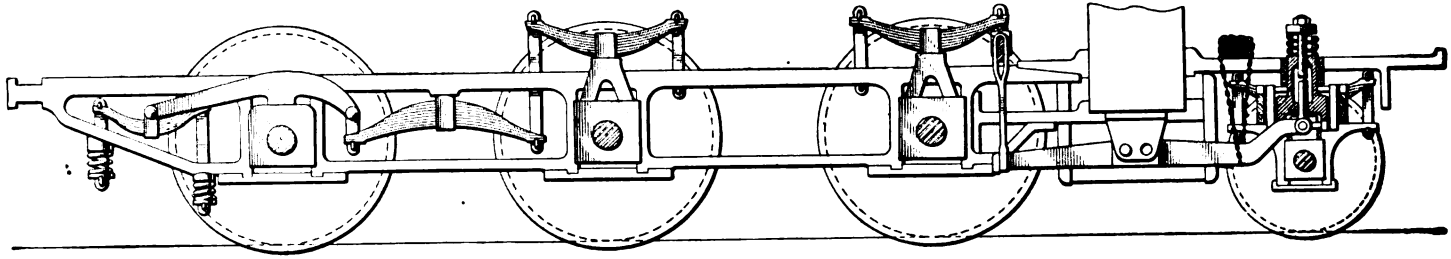

FIG. 38.

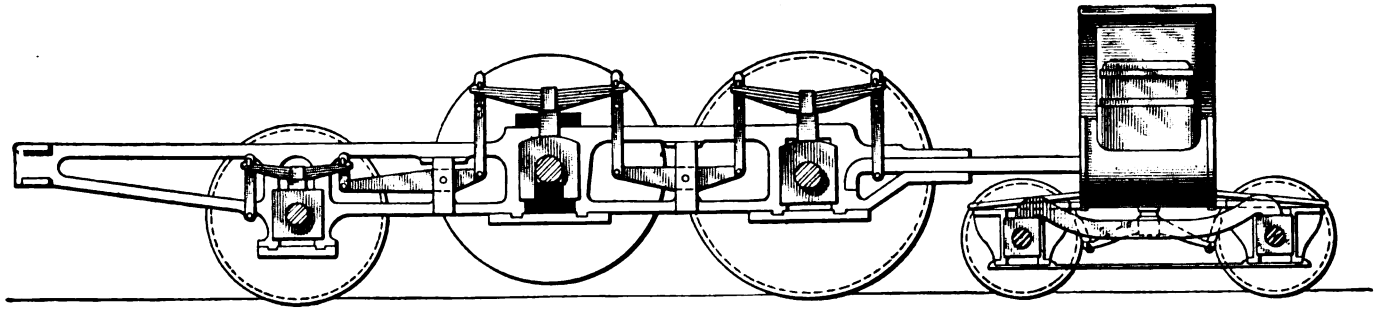

FIG. 39.

BROKEN TIRE ON TRAILER WHEEL.

80. When the tire on the trailer wheel of an Atlantic type engine breaks, it is necessary to swing that wheel and carry it clear of the rail; then, since the main driver is so far forwards, some means must be provided to prevent the back end of the engine settling on that side. To swing the wheel, proceed as follows: Run the trailer wheel up on a wedge until the wheel is raised slightly higher than its normal position. Remove the oil cellar and fit a block between the bottom of the trailer box and the pedestal brace; then fit a block in place of the oil cellar so as to carry the wheel in its raised position. Next, in order to relieve the box of the weight it usually carries, pry up the back end of the equalizer and place a block between the end of the equalizer and the bottom bar of the frame, as shown in Fig. 40, so as to hold it in position. The weight will now be carried by the drivers, and as there is a long overhang on that side, the back end of the engine will settle considerably. In order to hold the engine in position, take a piece of tie and place it as far back in the cab as possible, on the side that is disabled, allowing it to extend over on to the deck of the tank a short distance, as is shown in the figure. Next pass a chain around the tail-piece of the engine and around the tie, and after raising the back corner of the engine slightly higher than its normal position by means of a jack-screw, hook the chain as tightly as possible and wedge between the chain and the tie to prevent the end of the engine settling when the jack is removed. If a tie cannot be obtained, any stout bar of steel or iron that will stand the weight that will be thrown upon it may be used. Before proceeding, cut out the engine brake.

In the case of deckless engines, rest the tire or bar of iron in the firehole opening and chain as above.

BROKEN FRONT AXLE.

81. The breaking of the front axle of an Atlantic type engine necessitates the taking down of both side rods, and also the main rod on the side on which the mishap occurs, in order that the driver may be dropped out of the way. Then proceed as follows: Jack up the broken end of the axle

until it is in its normal position, and block up between the bottom of the box and the pedestal brace; also, place a block between the top of the frame and the spring saddle so as to take the weight off of the driving box and place it on the frame; connect up the main rod on that side again, cut out the driver brake, and proceed by using the main drivers. Care must be taken in handling the throttle, for the reason that the force of the cylinders is exerted on one pair of drivers instead of on two, and the drivers, consequently, are very apt to slip.

BROKEN MAIN AXLE.

82. A broken main axle on an Atlantic type engine means that both side rods and the main rod on the disabled side will have to come down. The valve stem should be disconnected on that side and the valve clamped in mid-position; also, the crosshead should be securely blocked, noting if the moving crosshead on the other side will clear the pin on the front wheel. After the main driver has been dropped out of the way, jack up the broken end of the axle and block it up as in the case of a broken axle on the front driver. In this case, also, the driver brake must be cut out; and since the engine is to be taken in by the aid of but one driver, the engine must be cut loose from the train and the throttle only partly opened, and the engine must be run light in this condition.

BROKEN AXLE OF TRAILING WHEEL.

83. When the axle of a trailing wheel breaks outside the box, proceed in exactly the same manner as in the case of a broken tire on that wheel, but without removing the cellar. It will be necessary to jack up the broken axle in this case, however, as it cannot be raised by means of a wedge, since the wheel is broken off. The engine brake must be cut out in this case also.

BROKEN MAIN DRIVING SPRING.

84. Engine Having Overhung Rigging.—Should a main spring or hanger of an Atlantic type engine break, run the main driver up on a wedge so as to relieve the springs, and,

prying up the back end of the front equalizer, place a block between the back end of the equalizer and the bottom rail of the frame, as shown in Fig. 41. Then pry down the back end of the back equalizer and block between that end of the equalizer and the top bar of the frame, as shown; this will permit of the use of the front and back springs. Next, run the main driver off the wedge and the front driver up on it, then block between the top of the box and the frame so as to make this driver carry its share of the load. All the broken parts of the spring and hanger should be removed in order to prevent their causing further trouble.

85. Underhung Rigging.—In the event of the main spring or hanger on an underhung spring rigging breaking, remove the broken parts in order to avoid further trouble, run the main driver up on a wedge so as to relieve the front driver and the trailer of the weight they carry, then prying up the back end of the front equalizer until it is a little above its normal position, chain the back end in this position, as shown in Fig. 42; next, pry up the front end of the back equalizer until it is slightly above its normal position and chain it in this position. Instead of chaining up the back end of the front equalizer and the front end of the back equalizer, as shown in Fig. 42, the front end of the front equalizer and the back end of the back equalizer may be blocked down to position by blocking between the end of the equalizer and the bottom bar of the frame. This will allow the use of the front and back springs, as in the previous case. After blocking the equalizers in position, run the main driver off the wedge and the front driver on it, and block between the top of the main driving box and the frame so that the main driver will carry its share of the load.

BROKEN FRONT SPRING.

86. In case the front spring should break, run the front driver up on a wedge so as to relieve the spring rigging as much as possible. Next pry down on the back end of the front equalizer until the equalizer is level, and block between the front end of this equalizer and the bottom rail of the frame.

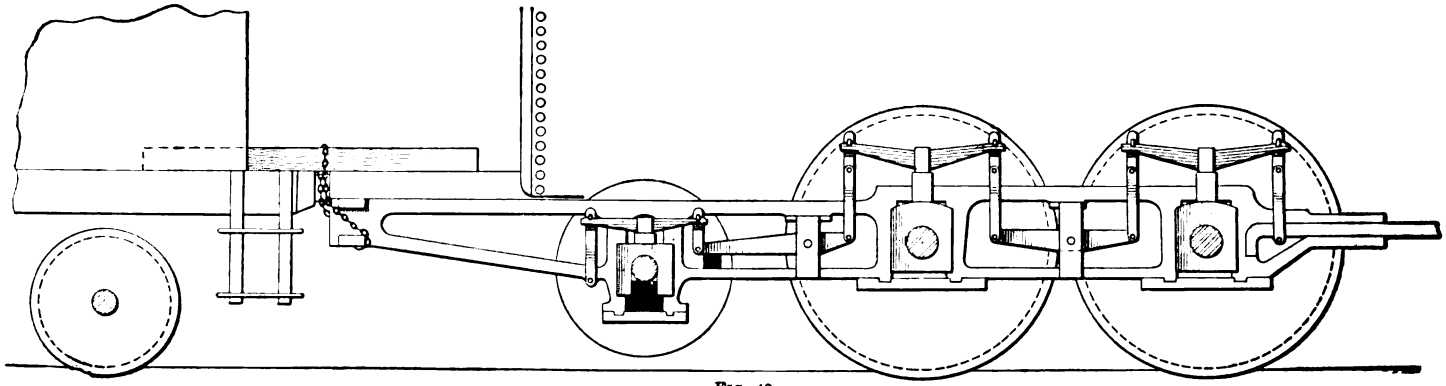

FIG. 40.

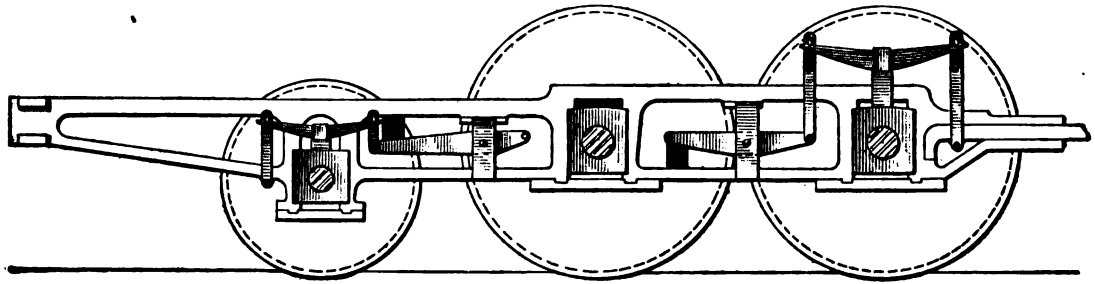

FIG. 41.

This cuts out the broken spring, but permits of the use of the main spring and the trailer spring. Next run the front driver off the wedge and the main driver on it, and block between the top of the front driving box and the frame so as to give that driver its share of the load. If the spring rigging is underhung, proceed in exactly the same manner, only in this case the front end of the forward equalizer will have to be blocked down.

NORTHWESTERN TYPE ENGINE.

BROKEN SIDE ROD OR FRONT PIN.

87. On an engine of the Northwestern type, if the side rod or front pin should break, proceed in exactly the same manner as you would in the event of a similar accident happening to an Atlantic type engine.

BROKEN TIRE ON FRONT DRIVER.

88. A broken tire on the front driver of a Northwestern type engine should be handled like a broken tire on a front driver of an Atlantic type engine.

BROKEN TIRE ON MAIN DRIVER.

89. In the event of the tire on the main driver of a Northwestern type engine breaking, proceed as in the case of a broken tire on a main driver of an Atlantic type engine.

BROKEN TIRE ON TRAILER WHEEL.

90. When the tire of the trailer wheel of a Northwestern type engine breaks, in order to get the engine to the shop it will be necessary to raise the wheel off the rail and carry it there after relieving it of the weight it carried. To do this proceed as follows: Run the wheel up on a wedge, remove the oil cellar and fit a block of hardwood in its place for the journal to run on, and put waste on each side of the journal and saturate it with oil; then block between the lower side of the box and the pedestal brace, as shown in Fig. 43, to hold the wheel in position. This blocking will carry the wheel clear of the rail, but as the thimble bolt will not carry the weight that would

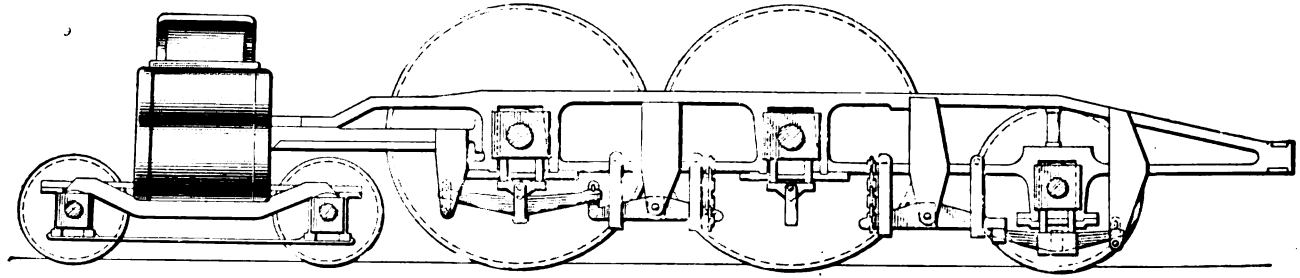

FIG. 42.

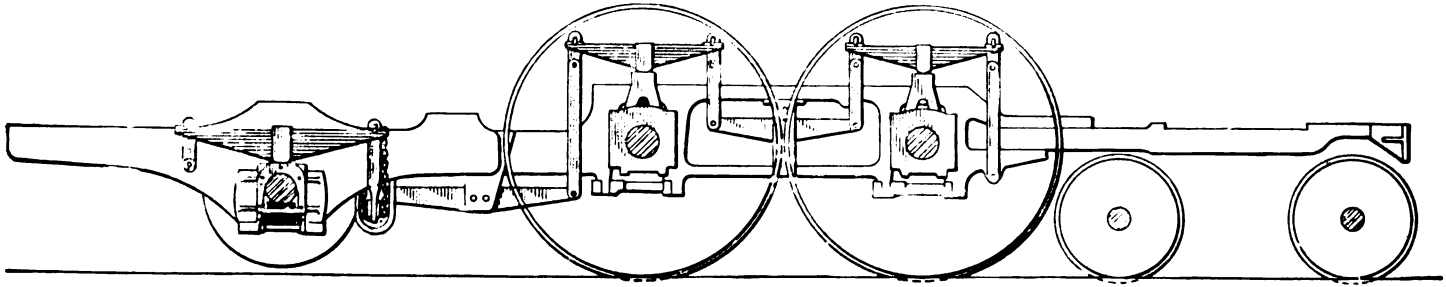

FIG. 43.

thus be thrust upon it, it is necessary to relieve the wheel of the weight it carries. To do this put a strong chain around the end of the cross-equalizer, as shown in Fig. 43, and chain it up to the frame, or else block below that end of the cross-equalizer in the safety hanger. When the trailer wheel is carried off the rail, the overhanging weight back of the main driver throws considerable strain on the main spring, which may not be able to carry it. In order to protect this spring, block between the top of the main driving box and the frame. It may be better to carry the weight of the back end of the engine on the disabled side, as in the case of a similar accident to an Atlantic type engine, which was previously explained, in which case it will be unnecessary to block between the rear driving box and the frame to protect the driving spring. When a trailer wheel is blocked up in this manner, care must be taken when rounding curves to prevent the good trailer wheel from dropping off the track; if the curves are so short that there is danger of this wheel dropping off the rail, place a wedge between the tender and the engine, close to the drawbar on the disabled side, that is, on the same side as is the broken tire. This wedge should be put in place before entering the curve, so as to make a rigid connection between the tender and the engine, as it will have a tendency to crowd the flanged wheel against the rail. Care must be taken, also, not to use too large a block, as it will have a tendency to crowd the front end of the engine or the rear end of the tender off the track. A better method of preventing the trailer wheel dropping off the track is to chain the back end of the engine frame on the disabled side to the opposite side of the tender.

BROKEN FRONT DRIVING AXLE.

91. A broken front driving axle on a Northwestern type engine should be handled in exactly the same manner as a similar accident to an Atlantic type engine.

BROKEN MAIN AXLE.

92. In the event of a main axle breaking, proceed as you would if the main axle of an Atlantic type engine should break.

BROKEN TRAILER AXLE.

93. A broken trailer axle on an engine of the Northwestern type should be handled in the same manner as a similar accident to an Atlantic type engine.

BROKEN FRONT DRIVING SPRING.

94. If the front driving spring of a Northwestern type engine should break, run the front driver up on a wedge so as to make that driver take the load and ease the tension on the spring rigging, and then pry up the front end of the equalizer nearest the broken spring until the equalizer is in its normal position; a block should then be placed either between the front end of the equalizer and the lower bar of the frame or between the back end of the equalizer and the upper bar of the frame. This method of blocking gives the use of the main driving spring and the trailer spring. Next run the front driver off the wedge and the back driver up on it, and block between the top of the driving box and the frame so as to make the front driver carry its share of the load. Remove the broken parts, if they are liable to cause trouble, or else secure them so that they will safely ride in position.

BROKEN MAIN DRIVING SPRING.

95. Should the main driving spring break, run that driver up on a wedge so as to relieve the spring rigging, then pry up the back end of the front equalizer and block between that end and the top bar of the frame; also, pry down the back end of the trailer-wheel equalizer on that side, and block between this end of the equalizer and the bottom of the frame at that point. Next, run the main driver off the wedge and the front driver up on it, and block between the top of the main driving box and the frame so that the main driver will carry its share of the load.

BROKEN TRAILER SPRING.

96. Besides the usual main frames of the engine, the Northwestern type engine has a short supplemental frame, marked *a*, Fig. 44, also Fig. 45. This frame is outside of the

main frame and is secured to the back end of it near the fire-box. The pedestal jaws of the trailer wheel are of heavy cast steel, and are bolted to the outside face of the supplemental frame, as shown in the figure. Both the pedestal jaws and the journal box of the trailer wheel are, therefore, outside of the supplemental frame; hence, when a trailer spring breaks, the weight cannot be thrown on the trailer box by blocking between the top of the box and the supplemental frame, for the reason that the box is outside of the frame; consequently, other means must be adopted for making the trailer box carry the load.

Whenever the trailer spring breaks, first remove the broken parts to avoid further trouble. And as this breakage allows the

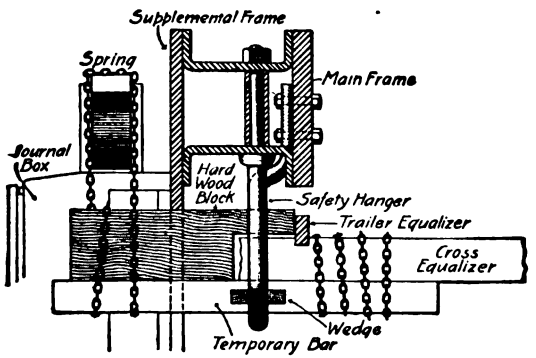

FIG. 45.

end of the cross-equalizer nearest the broken spring to drop into the U-shaped safety hanger, this end of the cross-equalizer must be jacked into position, and, if necessary, blocked there temporarily by placing a block in the safety hanger below it to hold the cross-equalizer in position. Next, by means of a jack or otherwise, raise the back end of the engine frame on the disabled side until the engine rides level; then use a tie, a piece of steel rail, or steel bar, or anything that will carry the weight that is usually carried by the trailer spring, and with it replace the broken spring. The front end of the tie (or whatever is used) should be chained to the end of the cross-equalizer, as shown, while the back end is securely chained to

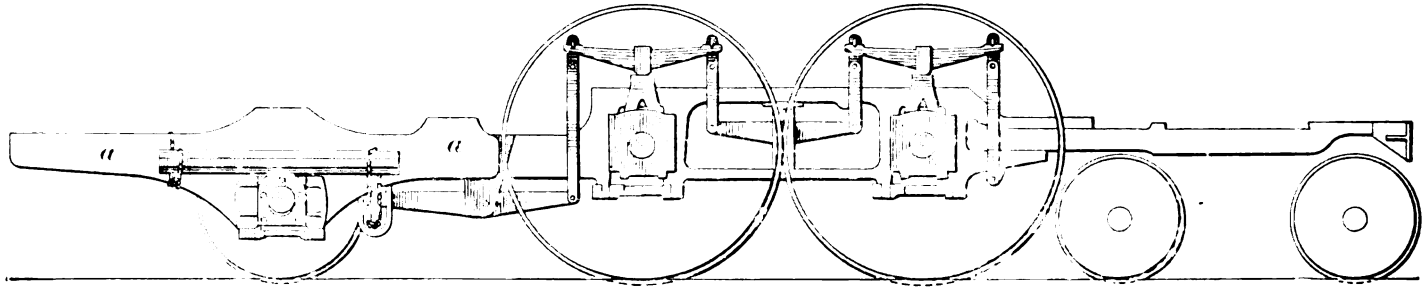

FIG. 44.

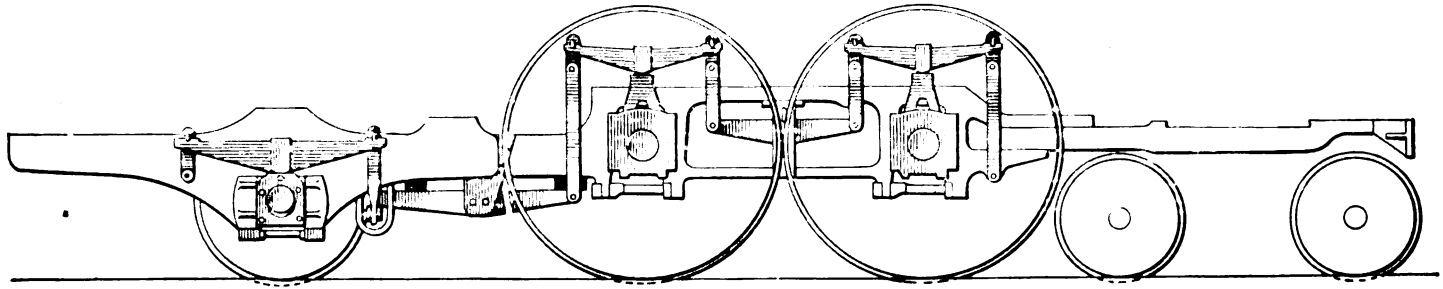

FIG. 46.

the supplemental frame and the lower hanger pin. After chaining the tie, remove the block from the safety hanger below the cross-equalizer so as to throw the weight on the trailer box. This method of blocking, Fig. 44, gives the use of all the springs on the engine except the broken one, the engine riding rigidly upon that trailer wheel.

BROKEN TRAILER-SPRING FRONT HANGER.

97. In the event of a trailer-spring front hanger breaking, and no other damage being done to the spring or the other parts, the hanger may be replaced by a chain, if one that can be used is at hand. To do this, raise the back end of the engine on the broken side, by means of a jack, so as to relieve the trailer spring; jack up the end of the cross-equalizer next to the broken hanger and block below it in the safety hanger; pry down the front end of the trailer spring, and then securely chain the end of the spring to the end of the cross-equalizer. Remove the block from below the equalizer in the safety hanger so as to allow the end of the cross-equalizer to have free play, and then proceed.

BROKEN TRAILER-SPRING BACK HANGER.

98. If the back hanger of a trailer spring should break, the back end of the spring may be secured to the lower hanger pin by means of a chain, the chain also being secured to the frame in such a way as to prevent its working off the hanger pin. To do this work, raise the back end of the engine on the broken side with a jack and also jack up the end of the cross-equalizer on the broken side so as to relieve the spring; then pry down the back end of the trailer spring and chain it as above.

BROKEN CROSS-EQUALIZER.

99. Should a cross-equalizer on a Northwestern type engine break, as shown in Fig. 45, it will allow the back end of the engine to settle down on that side, since there will be nothing there to support the front end of the trailer spring. In order

to block up for a break of this kind, raise the back end of the engine so as to relieve the trailer spring as much as possible. Then jack up the broken end of the cross-equalizer until it is a little above its normal position, and place a heavy bar, that will carry the weight, through the safety hanger below the cross-equalizer, as shown in the figure. If space is still left between the bottom of this bar and the safety hanger, block up with a piece of iron that will hold the cross-equalizer in its proper position. The bar of iron used should extend out far enough to enable the front end of the spring to be chained to it. Next block between this bar and the bottom of the outside supplemental frame, as shown in the figure, using a long hardwood block that will extend from the broken end of the cross-equalizer beyond the spring and also through the safety hanger, as shown. Pry down the front end of the trailer spring and chain it to the end of the bar, winding the chain around the block and bar; also, drive wedges between the sides of the block and the safety hanger to help hold the block in position. Next wrap a chain around the end of the bar and the cross-equalizer, as shown, to prevent the bar working from beneath the cross-equalizer; if necessary, wedge between the chain and the equalizer to tighten the chain. The brake chain from the tender brake rigging may be used for this purpose, if long enough. It may assist matters, also, to wedge between the temporary bar and the sides of the safety hanger, as by this means the bar will be prevented from moving sidewise. This method of blocking will carry the back end of the engine in its normal position and will give the use of the trailer spring.

BROKEN TRAILER EQUALIZER.

100. If Break Occurs in Front of Fulcrum.—When one of the trailer equalizers breaks, proceed as follows: If the equalizer breaks forwards of the fulcrum, as in Fig. 46, raise the back end of the engine on that side by means of a jack, or otherwise; then pry down the back end of the main spring and block between the bottom spring-hanger pin and the frame. The back hanger is made in two pieces, one of which

extends on either side of the frame and the equalizer, so that blocking will be held very nicely between the bottom hanger pin and the frame. Next pry down the end of the cross-equalizer on that side and block between the top of the trailer equalizer and the frame, as shown, to hold this end of the cross-equalizer in position. Care should be taken to secure the free end of the broken equalizer in such a way that it will not cause further damage.

101. If Break Occurs Back of Fulcrum.—If the equalizer breaks back of the equalizer fulcrum, jack up the back end of the engine on that side, pry down the front end of the trailer equalizer, and block between the top of that end of the equalizer and the bottom of the frame; then pry down on the cross-equalizer until it is in its normal position, and block between the top of the cross-equalizer and the frame through the U-shaped safety hanger.

BROKEN INTERMEDIATE EQUALIZER.

102. Probably the quickest way of handling a broken intermediate equalizer on a Northwestern type engine is to raise that side of the engine by means of jacks, for by that means the tension of the entire spring rigging will be relieved. Then pry down the front end of the second driving spring and block between the lower hanger pin and the top rail of the frame, as shown in Fig. 47; this will give the use of the back driving spring. Next pry down the back end of the front driving spring and block between the bottom hanger pin and the top rail of the frame, as indicated in the above figure; this will give the use of the front driving spring.

Another method will be to handle the accident by means of wedges. In that case, run the front driver up on the wedge so as to relieve the spring and spring rigging of the back driver, and block between the lower hanger pin and the frame, as before. Next run the front driver off the wedge and the back driver up on it so as to relieve the tension of the front driving spring rigging, and pry down the back end of the front driving spring; block between the lower hanger pin and the frame, as before.

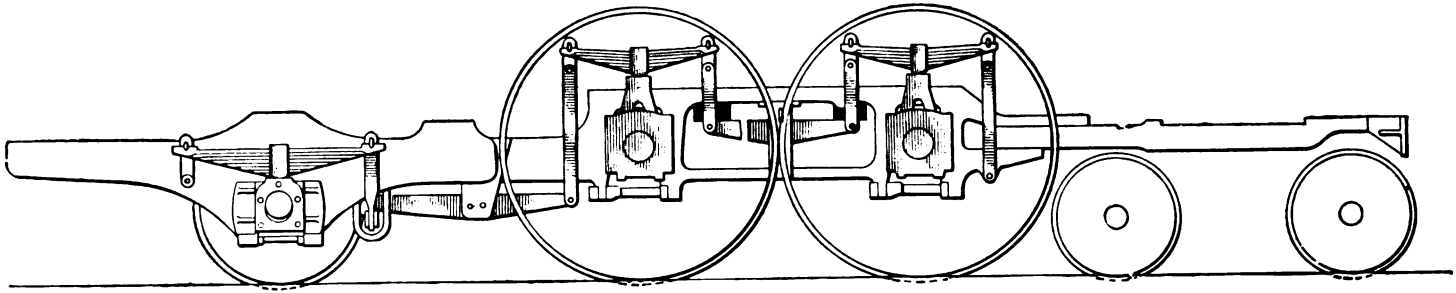

FIG. 47.

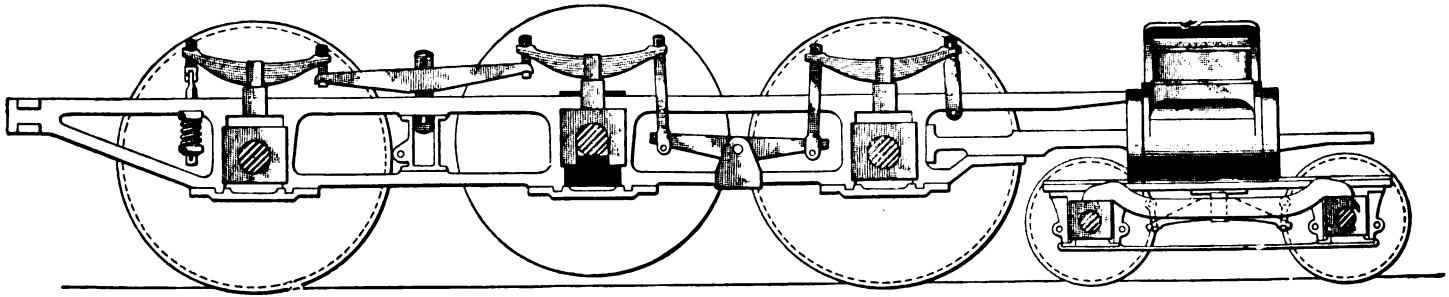

FIG. 48.

TEN-WHEELED ENGINES.

BROKEN FRONT SECTION OF SIDE ROD.

103. In the event of a front section of the side rod breaking, it will be necessary to take down all the side rods, if the knuckle-joint pin is in the back section and back of the main pin. To do this it will be necessary to disconnect the back end of both the main rods; then remove the side rods, and connect up the main rods again, and proceed by using but one pair of drivers.

BROKEN BACK SECTION OF SIDE ROD.

104. In case the back section of the side rod should break, it will be necessary to remove both that section and its mate on the opposite side, and proceed by using two pairs of drivers.

BROKEN FRONT TIRE.

105. If the front tire of a ten-wheeled engine breaks, run that wheel up on a wedge until it is about in its normal position; then remove the oil cellar and block between the bottom of the box and the pedestal brace; then in place of the oil cellar fit a block on which the journal can be carried. Next block between the top of the frame and the spring saddle to relieve the box of the weight it carries. If the rods are uninjured they need not be disconnected, but the driver brake must be cut out of service.

BROKEN MAIN TIRE.

106. Should the main tire break and no further damage be done, run that wheel up on a wedge to about the height of the tire; then block below the bottom of the box and pedestal brace, and in place of the oil cellar, as shown in Fig. 48. Also, block between the top of the frame and the spring saddle to relieve the box of its weight; then cut out the driver brake and proceed.

BROKEN BACK TIRE ON TEN-WHEELED ENGINE.

107. When the back tire on a ten-wheeled engine breaks, run that driver up on a wedge until it is about the thickness of the tire above the rail; then so block between the bottom side of the box and the pedestal brace, and in place of the oil cellar, as to carry the journal; also, block between the top of the frame and the spring saddle so as to relieve that box of its load. Then cut the driver brake out of service and you are ready to proceed. Of course, if the side rod is injured so that it should be removed, its mate, also, must come down.

If the spring rigging is so constructed that the back equalizer passes over and rests on the back driving box, as shown in Fig. 49, it is impossible to so block between the spring saddle and the frame as to throw the load on the frame, and, consequently, it will be necessary to block between the back end of the spring that is in front of the wheel between the bars of the frame, as shown, so as to make the frames carry the load instead of the box. The driver brake must be cut out also, as in previous cases. If the back end of the engine settles considerably when blocked up in this way, raise that end, and block between the main driving box and the frame in order to make the engine rigid on that box. Also, it may be necessary to chain up the back end of the engine as shown in Fig. 40.

BROKEN AXLE ON FRONT DRIVER.

108. In cases where the front driving axle breaks outside the driving box, and no other damage is done, it will be necessary to take down all the side rods, if the knuckle-joint pin is in the back section of the side rod. After removing the front driver, jack up the broken end of the front axle to its normal position and block between the bottom of the box and the pedestal brace. Next block between the top of the frame and the spring saddle, so as to relieve the box of the weight it carried. Cut out the driver brake and then proceed, using the main drivers only.

BROKEN AXLE ON MAIN DRIVER.

109. It is hard to say what damage will result in case the main driving axle breaks outside the journal box; however, if no serious damage is done to the other parts, proceed as follows: Take down all side rods and the main rod on that side of the engine; disconnect the valve rod on that side and clamp the valve in the center of its seat so as to block the steam ports to the cylinder; block the crosshead securely, and open the cylinder cock back of the piston; next jack the broken end of the main axle into position and block as in the case of a broken main tire, without removing the cellar; then cut out the driver brake and, cutting off the engine from the train, proceed with the lone engine, using the one driver that is connected up. Care must be taken in handling the throttle, however, so as to avoid slipping the driver and catching on the center. An engine in this condition should be run very carefully on curves.

BROKEN AXLE ON BACK DRIVER.

110. If no serious damage is done to the other parts of the engine when the axle of the back driver breaks, remove the back section of the side rod and its mate, cut out the driver brake as in previous cases, jack up the broken end of the back driving axle, and block as in case of a broken back tire, without removing the cellar. If the middle driver is flangeless, that is, if it has a blind tire, it will be necessary to fasten a chain around the tail-piece of the engine frame on the disabled side and pass it across to the opposite side, securing it to the front corner of the tender frame and wedging it there as tightly as possible so as to crowd the flange of the wheel against the rail. If the engine is to be run backwards, and there are sharp curves to pass, you can, in addition to using the chain, employ a wedge between the tender and the engine at such times as the flanged wheel is on the inside of a curve. However, care should be taken not to get the wedge in too tight, as it will have a tendency to crowd the rear end of the tender from the track.

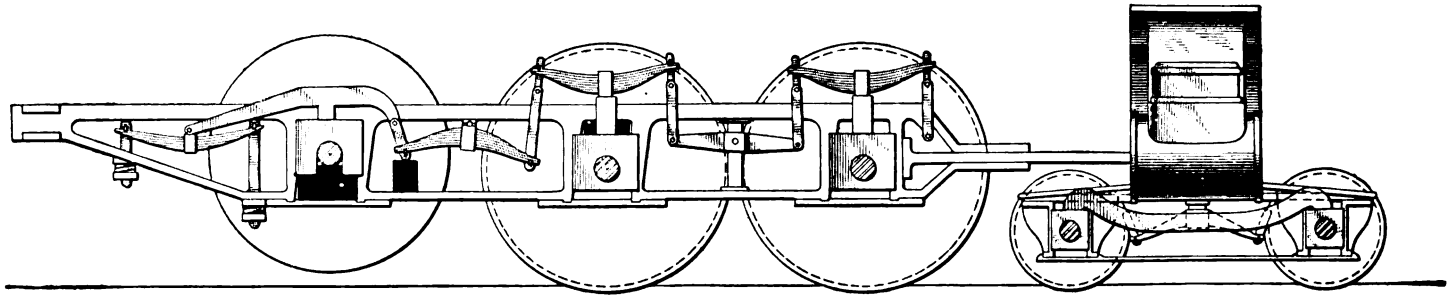

FIG. 49.

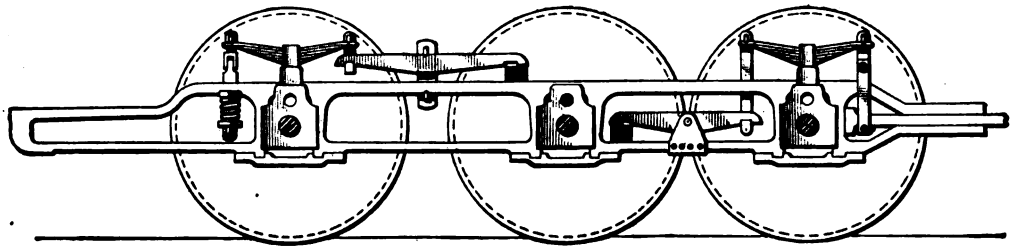

FIG. 50.

BROKEN FRONT DRIVING SPRING.

111. In the event of the front driving spring breaking, run the front driver up on a wedge, so as to relieve the tension of the springs, and then pry the front end of the front equalizer up and block between that end of this equalizer and the lower part of the frame. Next run the driver off the wedge, and, running the second driver up on it, block between the top of the front driving box and the frame so as to make the front driver carry its share of the load. This will permit the use of the main driving and back driving springs, but the engine will be rigid on the front driver on the disabled side.

BROKEN MAIN DRIVING SPRING.

112. Overhung Rigging. — When the main spring breaks, run the front and back drivers on that side up on wedges so as to raise the frame sufficiently high above the main driving box to permit the insertion between the top of the box and the frame of a wedge of the proper thickness to make that driver carry its share of the load. Next run the two drivers off the wedges and run the main driver up on one, so as to relieve the tension of the spring rigging as much as possible; then pry up the back end of the front equalizer until it is in position and block between this end and the lower rail of the frame, as shown in Fig. 50. Next pry up the front end of the back equalizer into position and block between the front end of this equalizer and the top of the frame. Then block between the top of the main driving box and the frame so as to put some of the weight on the driver. This will permit the use of the front and back driving springs, but the engine will ride rigidly on the main driver, the box of which should be liberally oiled.

113. Underhung Rigging.—Should the main spring break on an engine having underhung rigging, proceed as you would in the case of the main spring breaking on an engine with overhung rigging. The only difference is that it will be necessary to chain the back end of the front equalizer and the front end of the back equalizer to the frames, as shown in

Fig. 51. Instead of using chains, you can, if you wish, block down the front end of the front equalizer and the back end of the back equalizer so as to hold the equalizers in position.

BROKEN BACK DRIVING SPRING.

114. Overhung Rigging.—In case the back spring should break, run that driver up on a wedge so as to relieve the spring rigging, then pry up on the back end of the equalizer until it is in position, and block between that end of the equalizer and the top rail of the frame. This will give you the use of the main and front driving springs. Then run the back driver off the wedge and the main driver up on it, and place a block of sufficient thickness between the back driving box and the frame to cause that driver to carry its share of the load.

115. Underhung Rigging.—If on an engine having underhung rigging the back spring should break, run that wheel up on a wedge in order to relieve the spring rigging; then pry up the back end of the back equalizer until it is in position and chain it there, or else block between the bottom of the frame and the top of the front end of the equalizer to hold the equalizer in position. This will give the use of the main spring and the front driving spring. Next run the wheel off the wedge, and running the main driver up on it, block between the top of the back driving box and frame so as to cause that driver to carry its share of the weight.

BROKEN SPRING OR SPRING HANGER ON TRUCK OF TEN-WHEELED ENGINE.

116. When a truck spring or truck-spring hanger breaks on a ten-wheeled engine, place a block between the top of each of the front driving boxes and the frame to take up any play that may be there. Then run the front drivers up on wedges so as to take the weight off the truck. Care should be taken, however, not to raise the engine so high as to lift the main wheels off the rails, for in that case the edges of the cellar

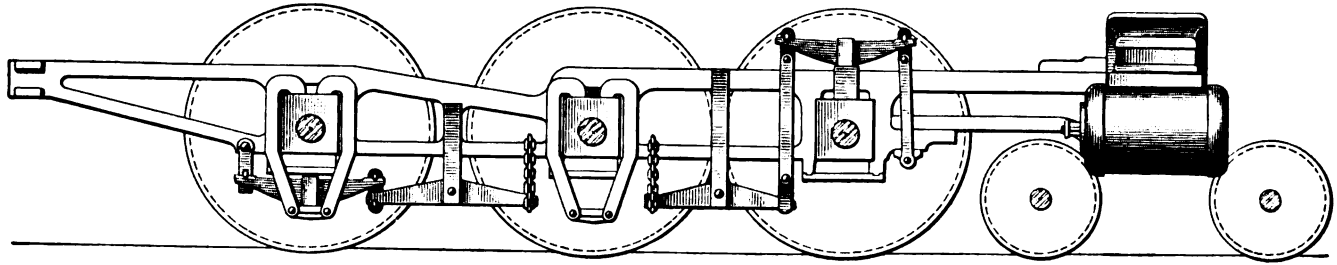

FIG. 51.

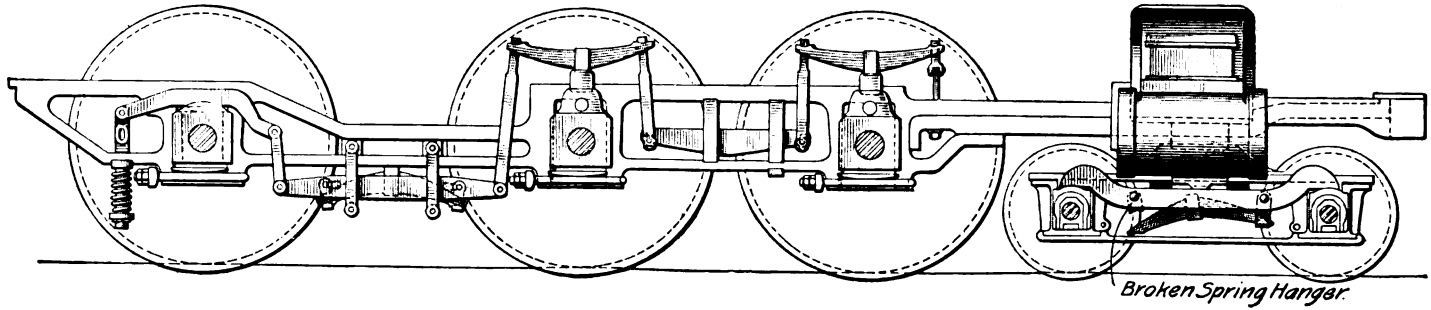

FIG. 52.

may mar the surface of the main journal. Next, pry up the engine-truck frame on the broken side until it is level with the opposite side, and place blocks between the top of the truck equalizer and the under side of the truck frame, as shown in Fig. 52, so as to carry it level. The engine may then be run off the wedges and the blocks removed from the top of the front driving boxes; the engine is then ready to proceed.

BROKEN TRUCK EQUALIZER.

117. Should one of the truck equalizers break, place a block between the top of the front driving boxes and the frame, as before, and run the front drivers up on wedges in order to take the weight off the truck; then remove the spring and broken equalizer, and place, on top of the truck boxes, blocks of wood of the proper thickness to carry the truck level. Then, having run the front drivers off the wedges, and removed the blocks from above the front driving boxes, the engine is ready to proceed.

CONSOLIDATION ENGINE.

BROKEN FRONT SECTION OF SIDE ROD.

118. If the front section of the side rod on a consolidation engine should break, and no other damage be done, remove the broken section and its mate. If the front crankpin does not clear the crosshead key, cut off the end of the key. If the pin does not clear the crosshead and guides, the front driver will have to be swung clear of the rail and carried that way, with the pins up to clear the travel of the crosshead. To do this, the wheels must be run up on wedges to the desired height, and blocks placed between the bottom of the driving boxes and pedestal brace, so as to carry the wheels in position; also, block between the top of the frame and the spring saddle on both sides so as to relieve the front drivers of their load. The drivers must then be secured in such a way as will prevent their turning.

BROKEN MIDDLE SECTION OF SIDE ROD.

119. In the event of the middle section of the side rod breaking, it will be necessary to take down all the side rods. If it is found that the front crankpin will not clear the crosshead key or the crosshead, swing the wheel in the manner described in the preceding article. With all the side rods down, only the main drivers will be in service, and it will be necessary to exercise care in opening the throttle.

BROKEN BACK SECTION OF SIDE ROD.

120. If when the back section of a side rod breaks no other damage is done, it will only be necessary to remove that section and its mate. Then proceed, using the other sets of drivers.

BROKEN TIRE ON FRONT DRIVING WHEEL.

121. When the tire on a front driver of a consolidation engine breaks, if no other damage is done, run that wheel up on a wedge about the height of the tire, and fit one block in place of the cellar and another below the driving box, as shown in Fig. 53. Then block between the top of the frame and the spring saddle in order to relieve that driving box of the weight it carried. This method of blocking will permit of the use of all springs.

If the second pair of drivers are flangeless, care must be exercised in rounding curves to prevent that pair of drivers leaving the track, as on short curves the truck may swing the front end of the engine far enough to allow the wheels with the blind tires to drop off the rails. The driver brake should be cut out, and if the front section of the side rod is not damaged sufficiently to cause its removal, it may remain up.

BROKEN TIRE ON SECOND DRIVER.

122. Should the tire on the second driver of a consolidation engine break, run that wheel up on a wedge about the thickness of the tire, and block as shown in Fig. 54. This gives the use of all the springs, which is an advantage. Cut out the driver brake and proceed.

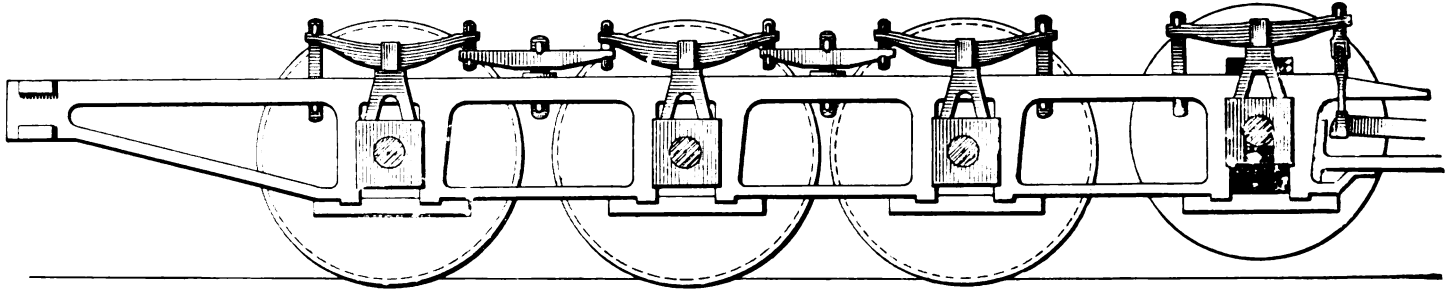

FIG. 53.

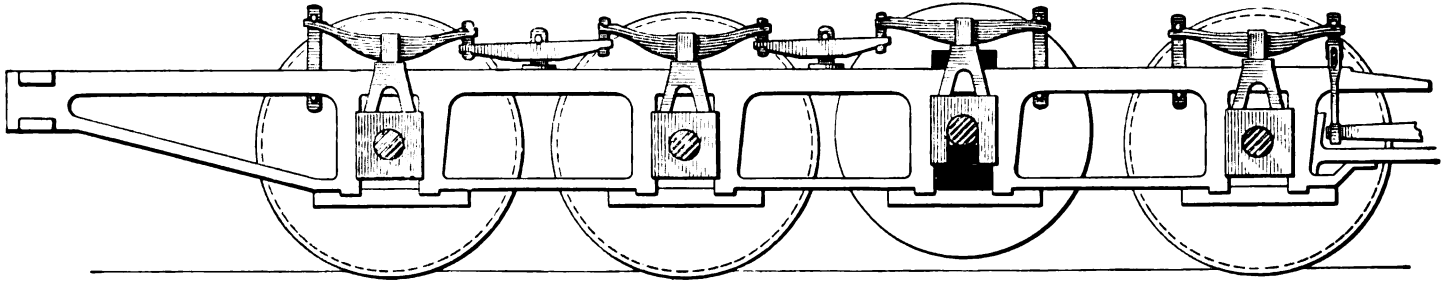

FIG. 54.

It will not be necessary to take down the side rods unless they are damaged in such a way as to require their removal. In the event of the middle section being injured, all the side rods will have to come down and the driver brake must be cut out entirely, the engine being brought in by means of the main drivers only. In the event of the side rods coming down, care should be taken to see that the front crankpin clears the crosshead sufficiently to be safe; if it does not, that set of wheels should be swung as previously explained.

BROKEN TIRE ON THIRD, OR MAIN, DRIVER.

123. In case the tire on the main driver breaks, if no other damage is done, run that driver up on a wedge until it is about the thickness of the tire above the rail, then block it in this position, as shown in Fig. 55. Also block between the top of the frame and the spring saddle, as shown. By this means all the springs are in use. Cut out the driver brake, but do not take down the side rods unless they are so injured as to require it.

BROKEN TIRE ON BACK DRIVER.

124. If no other damage is done, whenever the back tire breaks, run that wheel up on a wedge and block as indicated in Fig. 56. Then cut out the driver brake, as in previous cases, and proceed. However, should the second and main tires be blind, chain around the tail-piece of the engine frame on the disabled side and pass the chain up and across to the opposite side and secure it to the front corner of the tender frame, wedging it there as tightly as possible, so as to cause it to crowd the flange of the rear driver against the rail. In this event, the engine should be run cautiously, especially on curves and through frogs and switches.

BROKEN FRONT DRIVING AXLE.

125. When the front driving axle breaks outside of the driving box, it is necessary to remove the front section of side rods. When an engine is fitted with the alligator type of crosshead, it is a rather difficult matter to dispose of the

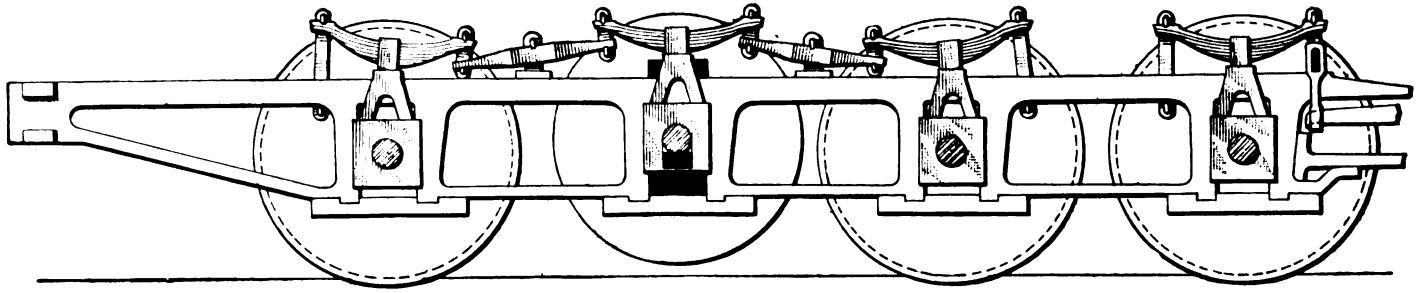

FIG. 55.

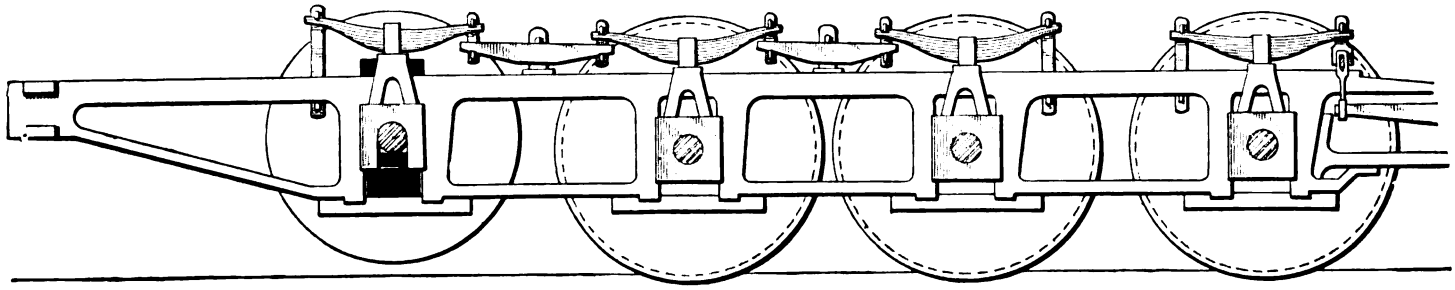

FIG. 56.

driver that is broken. To do this, remove the main rod on the disabled side and push the crosshead forwards in order to give as much space as possible between the guide yoke and the end of the crosshead, and thus allow more freedom in working the wheel out of the way. To assist in disposing of the wheel, cut off the ends of two or three ties and dig below them, so that when the wheel is pried off the rail and allowed to drop into the hole, it can be worked out from under the guides. After the wheel is removed, jack up the broken end of the axle until it is in its usual position, and then block between the bottom of the driving box and pedestal brace, so as to carry the box in this position, and block between the top of the frame and the spring saddle in order to relieve the box of its weight. Cut out the driver brake and connect up the main rod again on the disabled side of the engine.

If the crankpin on the opposite side does not clear the crosshead, the wheel should be swung clear of the track and carried there with the pin on the top quarter, and the wheel should be secured in this position so that it cannot turn. If the second and third drivers are fitted with blind tires, great care must be taken when going around curves in order that the wheels with the blind tires may not drop off the rails.

BROKEN AXLE ON SECOND DRIVING WHEEL.

126. In case the axle on the second driver breaks outside of the box, it will be necessary to remove all side rods. Remove the main rod on the disabled side so as to make it easier to remove the driver, after which the main rod may be connected up again. Before doing this, however, jack the broken end of the axle into position and block between the bottom of the box and the pedestal brace to hold the axle in this position; also, block between the top of the frame and the spring saddle to relieve the box of its load. The driver brake should be cut out.

If this pair of drivers is fitted with blind tires having no collars on the axle, it will be necessary to also swing the wheel on the opposite side, as otherwise there will be nothing to keep

that wheel on the rail. The wheel may be swung up and carried as already described, and it should be firmly chained to prevent its working out far enough for the crankpin to catch the main rod and thus cause further damage. The engine may then proceed by using the main drivers only.

BROKEN THIRD, OR MAIN, AXLE.

127. In case the third, or main, driving axle breaks, it is hard to say just how much damage will result. Should no other damage be done, however, all the side rods and the main rod on the disabled side must be taken down. Block the crosshead securely, disconnect the valve rod, and clamp the valve in mid-position so as to cover the steam ports to the cylinder, then remove the broken-off wheel, jack up the broken end of the journal to position, and block below the bottom of the box and the pedestal brace, in order to carry the journal in this position. Also, block between the top of the frame and the spring saddle, to relieve the box of the weight it carried. If the main wheels have blind tires and no collar on the axle, it will be necessary also to swing the main wheel on the opposite side. To do this, remove the main rod on the other side of the engine and clamp the valve in mid-position on its seat; then raise the driver until the box is at the top of the jaws and block it in this position, as already described; then chain the wheel securely to the frame, so as to prevent it working out. In this case both the main drivers are out of service and it will be necessary to have the engine towed to the shop. If time is valuable and it is an object to clear the main line as soon as possible, the eccentrics and links may be left up and the engine must be run or towed carefully in order to avoid further damage. As in all other cases of broken axle, the driver brake must be cut out of service.

On many engines, the eccentrics are placed on the second driving axle while the main rod is connected to the third pair of drivers. In this case, anything that will cause the side rods to be taken down will render the engine entirely helpless and it will have to be towed to the shop.

BROKEN BACK DRIVING AXLE.

128. When the back driving axle breaks, if no other damage is done, remove both back sections of the side rods, jack the broken end of the journal up level and fasten it there by blocking between the bottom of the box and the pedestal brace, as has been described in previous articles.

If the firebox extends over the frame and the springs between the pedestal jaws under the top frame rail, pry up the back end of the spring as high as possible, and block it there, even if it is necessary to disconnect the front end of the back equalizer to do so. If the springs and equalizers are above the frame, the block should be placed between the top of the frame and the spring saddle; the object in both cases is to relieve the box of the weight it carries. Should the second and third drivers have blind tires, it will be necessary to chain around the tail-piece of the engine frame on the disabled side, and then pass the chain across to the opposite side and secure it to the front corner of the tender frame, wedging it there as tightly as possible, so as to crowd the engine over against the flanged driver. Before proceeding, cut out the driver brake and run cautiously, especially on curves, and look out that the flange does not lead into frogs and switches.

In running backwards, if it is necessary to go around very sharp curves, it may be well to use a wedge in addition to the chain already mentioned; the wedge being placed between the tank and the engine at such times as the flanged wheel is on the inside of the curve. Care must be taken, however, not to get the wedge in too tight, as that will have a tendency to crowd the tender off the track.

BROKEN FRONT DRIVING SPRING.

129. In case of a broken front driving spring on an engine having a spring rigging like that shown in Fig. 57, the cross-equalizer will drop down on the frames; in that event, jack up the back end of the long truck equalizer and block between the top of the frame and the bottom of the cross-equalizer on the end next to the broken spring, so as to hold the back end of the truck equalizer in its proper position. Next run the second

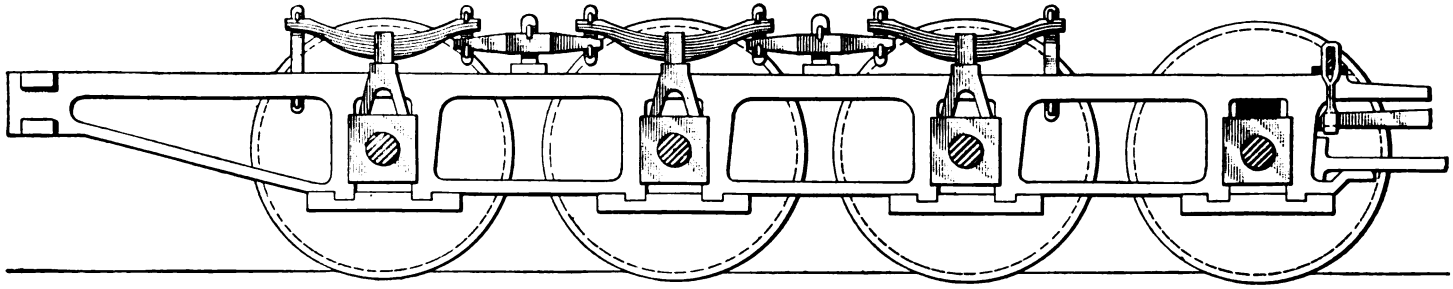

FIG. 57.

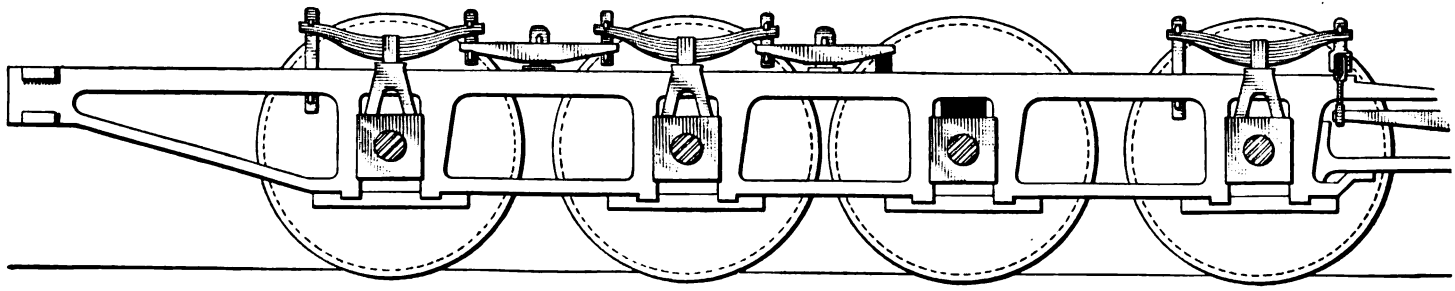

FIG. 58.

driver up on a wedge to raise the frame to its proper height above the front driving box, and block between the top of the front driving box and the frame in order to make the front driver carry its share of the load.

BROKEN SECOND DRIVING SPRING.

130. Whenever the second driving spring breaks, place a block between the top of the front driving box and the frame, as shown in Fig. 58, so as to take up the play, and run this driver up on a wedge sufficiently high to raise the frame the proper height above the second driving box; then block between the top of the second driving box and the frame so as to make the second driver carry its share of the weight. Next pry up the front end of the front equalizer to its normal position and block between this end and the frame in order to hold it in that position. This will permit of the use of all the springs except the broken one, and the engine will ride rigidly on the second driver on the disabled side. The front driver should be run off the wedge and the block removed from between its driving box and the top frame before proceeding.

BROKEN CROSS-SPRING ON BROOKS CONSOLIDATION ENGINE.

131. A broken cross-spring on a Brooks consolidation engine will allow the front end of the engine to settle upon the driving boxes until the pilot rests on the rails; also, a greater strain will be thrown on the springs and journals back of the broken spring, which will have a tendency to cause the journals to heat. To block up for an accident of this kind, proceed as follows: First block on top of the pony-truck frame hangers directly under the frame of the engine, then run the truck wheels up on wedges sufficiently high to level the engine; next, place a block between the top of each front driving box and the frame so as to carry the engine rigidly on the front drivers; then run the truck wheels off the wedges and run the front driving wheels up on thinner ones, so as to permit the removal of the blocks from between the pony-truck frame hangers and

the engine frame; jack up the back end of the truck equalizer sufficiently high to put a portion of the weight of the engine on the truck, and chain it in position to a short piece of rail or a tie placed across the top of the frames in such a position as not to rest on the brake cylinders. The front wheel may then be run off the wedges and the engine is ready to proceed, the weight of the front end of the engine being carried on the front driving wheels and the trucks, as before the cross-spring was broken. The equalizer extending from the guide yoke to the back end of the truck equalizer will not require any attention, as it will carry on the guide yoke and front hangers, or connecting bar, between the driving brake cylinders; the brake rigging should be disconnected before the engine is raised, but it may be connected up again and can be used with safety.

BROKEN LONG TRUCK EQUALIZER.

132. In the event of a long truck equalizer on a consolidation engine breaking, proceed in exactly the same manner as when that equalizer breaks on a mogul engine, as explained in Art. **72.**

BROKEN FRONT PIN OF TRUCK EQUALIZER.

133. In the event of the front pin of the long truck equalizer breaking, proceed as you would in the case of this pin breaking on a mogul engine, as described in Art. **75.**

COMPOUND LOCOMOTIVES.

DESCRIPTION, OPERATION, AND OPERATING.

GENERAL DISCUSSION.

DEFINITIONS.

1. A **compound engine** is one in which steam is first admitted to one cylinder and expanded, after which it is exhausted into another and larger cylinder, in which it acts on a second piston, and is expanded again; the steam is thus expanded more than it would be if used in but one cylinder. The smaller cylinder into which the steam is first admitted is called the **high-pressure cylinder,** since it is operated by high-pressure steam direct from the boiler. The steam that is admitted to the second or larger cylinder has had its pressure reduced considerably by expansion; hence, the larger cylinder is called the **low-pressure cylinder** on account of its being operated by steam of a lower pressure than that used in the smaller cylinder. An engine that has only one cylinder in which to expand the steam is said to be a **single-expansion,** or **simple, engine.** The ordinary standard locomotive consists of two simple engines. An engine that has two cylinders in which to expand the steam, one of which discharges into the other, is said to be a **double-expansion,** or **compound, engine.** Some engines have three or even four cylinders, in which the steam is expanded as many times as there are cylinders; but, while these, strictly speaking, are compound

For notice of copyright, see page immediately following the title page.

engines, they are not called by that name, but are distinguished from the double-expansion engine by the names *triple expansion* and *quadruple expansion*, respectively, common usage applying the name of *compound* to the double-expansion engine only.

DIFFERENCE BETWEEN COMPOUND AND SIMPLE LOCOMOTIVES.

2. Compound locomotives as used in this country are of the double-expansion types, and have either two or four cylinders, depending on the make of the locomotive. Those of the two-cylinder type have a cylinder placed on either side, like a simple locomotive, the high-pressure cylinder exhaust passage being connected to the low-pressure cylinder steam chest by means of a receiver placed in the extended front end. Those of the four-cylinder type have a compound engine on either side; that is, there is a high-pressure and a low-pressure cylinder on each side of the locomotive, the two cylinders on a side being connected by the proper passages made in the cylinder saddle. The general construction of a compound locomotive is practically the same as that of a standard simple locomotive; in the four-cylinder types, however, there is a difference in the arrangement of the cylinders, pistons, crossheads, and valves; but the boiler, frames, truck wheels, driving wheels, and valve gear are the same as those of a simple locomotive.

ADVANTAGES OF THE COMPOUND.

3. Adaptability to Different Classes or Service. The advantages of the compound over the simple engine depend to a considerable extent on the class of service; in general, the greatest economy will be obtained when the work is hardest and most constant, and the speed moderate. As the load decreases and the speed increases, the economy of the compound decreases, until, at a point approaching light road service and high speed, the compound will show no economy over the simple engine. The compound will probably show to the best advantage in heavy service on level divisions where the engine can be loaded to its most economical point on both

out-trips and in-trips. Compounds, as a rule, do not "drift" as easily as simple engines; when running on a down grade with steam shut off, the pistons (especially the low-pressure pistons) act as air compressors, which send a strong jet of air through the stack, thus producing a draft through the fire at a time when no steam and practically no draft is required. The consequence is that considerable coal is wasted while drifting, and the economy of compounds is reduced considerably at such times. It is due to this loss while drifting that a compound is not as economical on hilly as on level divisions. Another reason is that an engine can only save coal during the time coal is being used, so that, if steam is worked throughout the whole run on both the in-trips and out-trips, the compound will make a better showing than it will if steam is only worked during a part of each trip.

The compound is advantageous in heavy, fast passenger service also, and especially so on the very fast trains. The probable reason for this is that such service requires so much power that the boiler of the simple engine is overtaxed, and, to supply the necessary steam, it must work at a very wasteful rate of combustion; whereas the compound, which requires less steam to do the work, generates steam at a much less rate—hence with greater economy.

4. Other Advantages.—In addition to the saving of fuel, the compound has other advantages over the simple engine. Since it does its work with less steam than the simple engine, it necessarily must use less coal and less water. The saving in water is a very decided advantage, especially in localities where the supply of water is limited or where the water is bad. On account of using less water than the simple engine, it is often possible for a compound to make a longer run between supplies—to avoid taking bad water that would cause foaming. Also, by using the good water only, less sediment will collect in the boiler, which will steam more freely, and the boiler can be run for a longer period of time without being washed out. Further, with a given quality of water, good or bad, the amount of sediment in the boiler of a

compound locomotive will be less than in the boiler of a simple one, because the compound uses less steam in doing the same amount of work.

5. The compound has still another advantage over the simple locomotive, because in times of emergency it can be made to increase its (compound) tractive force 25 to 30 per cent. In general practice it is customary to make this maximum tractive power of compound (when working as such) and of simple locomotives about 22 per cent. of the adhesive weight (the weight on the rails under the drivers), in order that all weather and rail conditions may be met without causing excessive slipping. The maximum tractive force of the simple engine cannot be varied, but that of the compound can. The tractive force of some compounds is increased by admitting *live* steam at a reduced pressure into the low-pressure cylinders; while in other types of compounds it is increased by converting the locomotive into a simple locomotive for the time being, the high-pressure exhaust going directly to the atmosphere, and live steam at a reduced pressure being admitted to the low-pressure cylinder. This, in some cases, will increase the power of the locomotive 25 or 30 per cent. Of course, this increased power is not to be used under ordinary conditions, but only in emergencies, such as in starting a very heavy train, or when in danger of stalling on a grade. It is found that the adhesion between the drivers and the rails increases considerably under certain conditions to such an extent that the tractive power can be run up to 30 per cent., or more, of the adhesive weight without danger of slipping the wheels, a gain of 8 per cent. At such times the compound can utilize its reserve power, and will thus be able to haul a load during that time that would stall a corresponding simple engine.

HOW ECONOMY IS EFFECTED.

6. Object of Compounding.—The principal object in compounding locomotives is to effect **a saving in fuel**; to do this, the compound must use less coal than a simple locomotive doing the same work. The economy of the compound

locomotive is due, *first*, to the higher steam pressures that can be used advantageously; *second*, to reduced cylinder condensation; *third*, to greater expansion of the steam, the initial pressure often being 200 pounds, while the exhaust steam escapes at a pressure that is only sufficient to maintain a proper draft through the fire; and *fourth*, to a slower rate of combustion in the firebox. Of course, since the compound and simple locomotives are being compared for **fuel economy**, everything that will effect that economy must be considered; in other words, both the boiler and engine must be considered.

7. **High Pressures.**—Both the size and the weight of the simple locomotive have been increased greatly within the last few years, and the construction and quality of the material used have been improved so as to permit the use of steam at higher pressures. This has had the result of raising the pressure from 120 or 130 pounds to 180 or 220 pounds; but, owing to the limitations of its stroke, cut-off, and rate of expansion, the simple engine is unable to fully realize the advantages of pressures above that amount. In fact, it is found in practice that the economy of a simple engine using steam at 180 pounds is as great as, if not greater than, when using steam at 200 pounds. Of course, increasing the boiler pressure increases the power of an engine, but, on the other hand, since the rate of expansion remains the same, the pressure at which the exhaust steam escapes to the atmosphere, and also the back pressure in the cylinders, increases also; hence, the amount of heat wasted increases with the pressure, so that no advantage is gained by increasing the pressure above a certain point. If greater expansion could be obtained without increasing the cylinder condensation, greater economy would result, but this is not possible with the simple engine.

8. **Cylinder Condensation.**—With compound locomotives, it is possible to use pressures of 200 pounds or more, and to reduce both the cylinder condensation and the exhaust pressure; hence, greater economy can be obtained with compounds by using steam of higher pressure. Condensation is less, for the reason that the steam is expanded in two cylinders instead of in

one, as in the simple engine; hence, the range of pressure and consequent range of temperature in either cylinder of the compound is very much less than it is in the cylinder of a simple engine. The amount of condensation that will take place depends on the difference between the temperature of the cylinder walls at admission and the temperature of the entering steam; and, since this difference is very much less in the compound than in the simple engine, it follows that the condensation will be less in the compound. With a cross-over compound, the steam in passing from one cylinder to the other goes through the receiver which is enclosed in the smoke arch, and the high temperature there tends to reheat the steam.

9. Increased Expansion.—The reduction in the exhaust pressure is brought about by expanding the steam considerably more than is done in the simple engine. The exhaust pressure of a simple engine using high-pressure steam is so high as to be very wasteful, whereas the exhaust pressure of a compound is no higher than is necessary to maintain the proper draft through the fire. The high exhaust pressure of the simple engine represents a waste of considerable power; the compound, on the other hand, by expanding the steam to a much lower pressure, saves a great deal of power that is wasted in the simple engine; therefore, it can do the work with less steam and will require less coal and water.

10. Slower Rate of Combustion.—Assume two locomotives, one simple and the other compound, but both of the same size and type: The boilers will have equal heating and grate surfaces, and should therefore be equally economical for like rates of combustion; but owing to its increased rate of expansion and decreased cylinder condensation, the compound engine requires less steam than the simple engine, and its rate of combustion will be less. This not only means that the compound locomotive requires less coal, but that the coal used is burned at a slower, and consequently more economical, rate. A number of experiments conducted by Prof. W. F. M. Goss, of Purdue University, demonstrated that, when coal (Brazil block) was burned at the rate of 50 pounds per square foot of grate

surface per hour, 8½ pounds of water were evaporated for each pound of coal used; while, when the rate was increased to 180 pounds of coal per square foot of grate, only 5½ pounds of water were evaporated per pound of coal—a loss of about 35.3 per cent. Strictly speaking, the above relationship between the water evaporated and the coal burned applies to the boiler from which the relationship was determined, but all locomotive boilers may be expected to give the same general result; that is, the valves may vary some, but they will be in the same general proportion.

11. Milder Exhaust.—The milder exhaust of the compound is in several respects more advantageous than the stronger exhaust of a simple locomotive. In the first place, the heating surfaces of the boiler absorb heat from the gaseous products of combustion as they pass on their way to the stack, and the slower the velocity of the gases, the greater will be the amount of heat surrendered, and the less will be the amount carried away as waste heat; hence, the milder exhaust and slower rate of combustion of the compound cause more of the heat of the gases to be delivered to the water, and less to be lost in the waste gases. Also, a thinner fire can be carried, which still further insures better combustion.

There is still another advantage, in that less unconsumed fuel is carried through the tubes into the smokebox, and thence out of the stack. This not only represents an actual saving in fuel, but also greatly diminishes the chances of fires along the roadway, due to live sparks alighting on inflammable material. In some experiments conducted by Professor Goss, it was found that, while the rate of combustion for a simple locomotive was varied from 64 to 241 pounds of coal per square foot of grate surface, the spark losses ranged between 4.3 and 15.5 per cent. of the coal fired.

DEGREE OF ECONOMY EFFECTED.

12. It can no longer be doubted that the compound locomotive, when assigned to the proper class of service, is much more economical, both in fuel and in water, than the simple

locomotive in the same service. Carefully kept records of competitive long-service tests in both passenger and freight service—during which compound and simple locomotives were compared that were as nearly alike in weight, boiler capacity, steam pressure, and general design as possible—show that, in the right class of service, compound locomotives, when properly handled, effect a saving in fuel of from 15 to 25 per cent., and a saving in water of about 15 per cent. Many long-service tests on different roads throughout the country seem to show that the cost of running repairs of the latest improved types of compounds is nearly, if not quite, as low as the running repairs of simple engines in the same service. For instance, the cost of running repairs, together with the mileage made between April 1, 1897, and September 30, 1898, for compound and simple locomotives on the Northern Pacific Railway, is shown in the following table.* The last column on the right shows the average cost of repairs per 1,000 gross-ton-miles.

COST OF RUNNING REPAIRS.

Locomotives.	Locomotive Miles.	Gross-Ton-Miles.	Repairs per Locomotive Mile.	Repairs per 1,000 Gross-Ton-Miles.
Compound A . . .	56,886	42,146,900	$ .0161	$ .0217
Compound B . . .	60,234	49,070,628	.0154	.0182
Compound C . . .	54,497	42,404,236	.0154	.0198
Compound D . . .	51,248	40,544,366	.0121	.0153
Simple 507	52,915	31,400,344	.0166	.0280
Simple 520	63,234	38,163,393	.0120	.0198
Simple 566	52,738	34,612,835	.0184	.0284

EARLY FAILURES.

13. Considerable trouble was experienced with some of the earlier forms of compounds; the cost of maintenance was not only higher than that of a simple engine, but the liability of the compound to failure, on account of breaking down, made its performance unsatisfactory. The failures, however, were not

* Edwin M. Herr, *Proceedings* of the Western Railway Club.

generally due to trouble with the purely compound features—namely, the intercepting and separate exhaust valves (when present), the receiver in the two-cylinder type, and the large low-pressure cylinder—but were due to trouble with parts that are common to both simple and compound locomotives. That is, most cases of failure were due to broken frames, cylinders, piston rods, or valve gear, or to unequal wear on the two sides of the engine, or to cut or badly worn high-pressure steam valves. These defects in the compound were clearly chargeable to faulty design, poor construction, or improper care in maintenance, and by studying the causes of failure and remedying such defects as developed during operation, the weak places have gradually been strengthened until at the present time the cost of running repairs is quite satisfactory.

PROMINENT TYPES.

14. The Different Systems.—There are only two types of compounds that are used to any extent in this country; namely, the **four-cylinder compound** and the **two-cylinder compound.** Of the four-cylinder compounds, there is only one system—namely, the Baldwin (Vauclain)—that is used to any extent, although there are four-cylinder compounds in use which have the cylinders on each side arranged in *tandem* and the pistons attached to the same piston rod. The principal two-cylinder types in use are the Richmond, the Schenectady, the Pittsburg, and the Rhode Island. There is also the Baldwin two-cylinder type.

15. Baldwin (Vauclain).—This compound is known as the Vauclain compound, so called after its inventor, Mr. Samuel M. Vauclain. It has two cylinders—one low pressure and one high pressure—on each side, arranged one above the other in the same vertical plane, and it is called a **non-receiver,** or **continuous-expansion,** compound, from the fact that each high-pressure cylinder exhausts directly into the low-pressure cylinder that is on the same side of this engine. The area of the low-pressure piston is about three times that of the high-pressure piston.

Baldwin Two-Cylinder.—This compound, only recently introduced, is provided with an intercepting and a separate exhaust valve, and is of the cross-compound automatic type.

16. Richmond (Mellin).—This compound was invented by Mr. C. J. Mellin. It has two cylinders, one on either side, the exhaust passage from the high-pressure cylinder being connected with the steamway to the low-pressure cylinder by means of a large reservoir or receiver placed in the smokebox. In other words, the high-pressure exhaust steam must cross over from one side to the other in passing from the high-pressure into the low-pressure cylinder; hence this type is often called a **cross-over,** or **cross-compound,** type. It is also often called a **receiver** compound, to distinguish it from types that have no receiver. This system has an **intercepting valve** in the cylinder saddle, and is provided with a separate exhaust passage for the high-pressure cylinder exhaust, for use during the time the engine is working simple. It is known as an *automatic* system for the reason that, when starting compound, the intercepting and reducing valves automatically move to simple position for a revolution or two, or until the receiver is charged to pressure, when they automatically return to compound position. The area of the low-pressure piston is about two and one-half times that of the high-pressure piston.

The capacity of the receiver used in cross-compound locomotives varies with the make of the locomotive. It is based on the capacity of the high-pressure cylinder, and in some makes it has from two to three times the capacity of that cylinder, while in others it has from three to four times the capacity. Generally, large receivers give less variation in receiver pressure, and hence are conducive to economy; but for good working, the receiver capacity should not be less than twice the capacity of the high-pressure cylinder.

17. Schenectady (Pitkin).—The Schenectady compound, invented by Mr. A. J. Pitkin, is also of the two-cylinder cross-compound type; it has an intercepting valve, and is provided with a separate exhaust port for the exhaust of the high-pressure steam during the time the engine is working simple. The

Schenectady, like the Richmond, is automatic in its action, and its low-pressure piston has about two and one-half times the area of the high-pressure piston.

18. Pittsburg (Colvin).—This compound is also of the cross-compound type, and has an intercepting valve and a separate exhaust passage for the high-pressure exhaust. It is strictly non-automatic, however; that is, the intercepting valve must be moved from one position to another by the engineer.

19. Rhode Island.—This compound, designed by Chas. H. Batchellor, is also of the cross-compound type similar to those just described.

BALDWIN (VAUCLAIN) SYSTEM.

DESCRIPTION.

20. General Arrangement.—The **Vauclain Compound** locomotive consists of two compound engines, one on either side; the two cylinders *A* and *B*, the valve chamber *C*, and a half saddle, being cast in one piece (Figs. 1 and 2). The arrangement of the cylinders and valve bush in the saddle

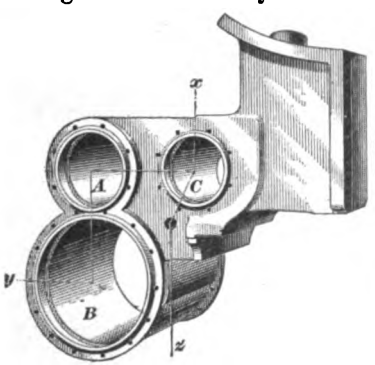

FIG. 1.

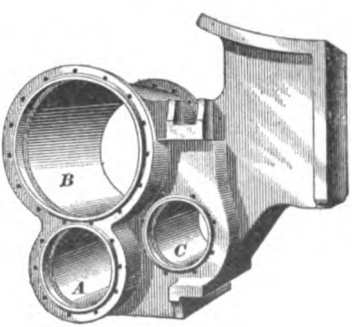

FIG. 2.

depends on the size of the driving wheels, as with small wheels the large, low-pressure cylinder would strike the ground. In such cases this cylinder is placed above. In eight- and ten-wheeled locomotives having large drivers the arrangement used

will be that shown in Fig. 1; in mogul, consolidation, and decapod locomotives, the arrangement will be that shown in Fig. 2. It will be observed that, whatever the arrangement, the one cylinder is directly above the other—their center lines being in the same vertical plane—and the valve chamber *C*, which takes the place of the steam chest, is situated between the cylinders and the smokebox, as close to the cylinders as convenient, in order that the steamways leading to the cylinders may be as short as possible. The smaller cylinder *A* is

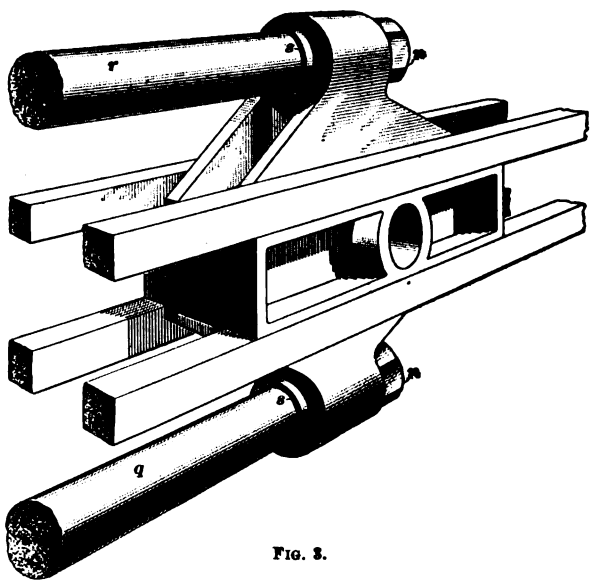

FIG. 3.

called the **high-pressure cylinder,** for the reason that steam is admitted to it directly from the boiler and at nearly boiler pressure. The steam is allowed to expand in this cylinder, thereby having its pressure reduced to a greater or less extent, and is then discharged into the larger cylinder *B*, called the **low-pressure cylinder,** on account of its being operated by steam of much lower pressure than that used in the cylinder *A*. The steam is expanded still farther in the low-pressure cylinder, and is then discharged into the atmosphere through the exhaust in the usual manner.

The pistons that operate within the two cylinders are connected to the same crosshead, an illustration of which is given in Fig. 3. The piston rods *r* and *q* are made of equal diameter, and with a shoulder *s* on the crosshead end to prevent the rod from being forced into the crosshead; also, by the use of this shoulder, the end that enters the crosshead can be made of equal diameter with the body of the rod, thus greatly strengthening the rod at the crosshead. The holes made in the crosshead to receive the piston-rod ends are tapered to insure a perfect fit, and are bored in such a manner as to insure the rods being perfectly parallel to each other. The rods are secured to the crosshead by means of large nuts *n*, *n*, and these, in turn, are prevented from coming loose by taper keys through the ends of the rods.

21. The Piston Valves.—The valve used to distribute the steam to the cylinders is of the piston type, and works within the valve chamber *C*. In reality, it is a double valve, and, by its peculiar construction (being hollow), is enabled to do the work of two valves; that is, it controls the admission of steam to, and the exhaust of steam from, both the high- and the low-pressure cylinders. A perspective view of this **piston valve**

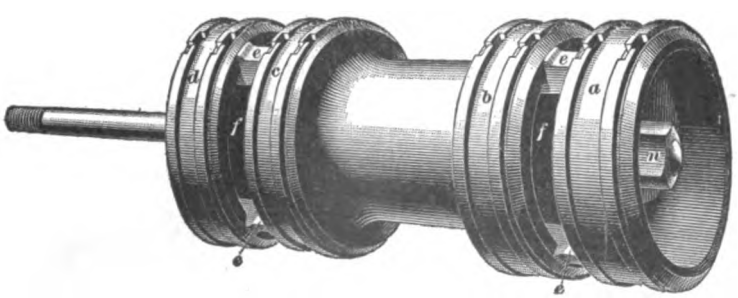

FIG. 4.

is given in Fig. 4, Fig. 5 being a cross-sectional view of the valve in the valve chamber, showing the interior of the valve and the cavities in the casting surrounding the valve bush. As will be seen, the valve is fitted with two pairs of cast-iron packing rings at either end, which constitute the edges of the valve. The rings on the outer heads *a* and *d* control the admission of

steam to, and the exhaust of steam from, the high-pressure cylinder, while the rings on the heads *b* and *c* perform the same duties for the low-pressure cylinder. The two end heads *a* and *d*, Fig. 5, are made solid, while the two inner heads *b* and *c*, together with that part of the valve between them, are hollow

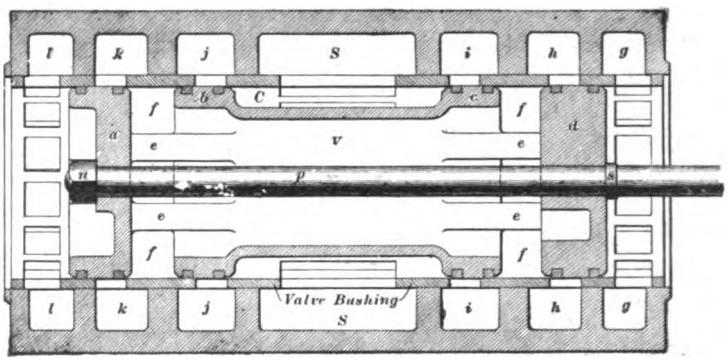

FIG. 5.

and are secured to the outer heads by several ribs *e*. The slots *f*, *f* between the heads *a*, *b* and *c*, *d* are thus connected through the inner cavity of the valve *V*. The valve stem *p* passes clear through the valve and is held in position by the shoulder *s* and the nut *n*.

22. Movement of Piston Valve.—When the cylinders are arranged as in Fig. 1, with the low-pressure cylinder underneath, a **rocker** is used to transmit the motion of the eccentrics

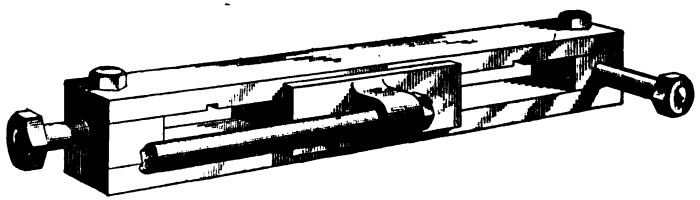

FIG. 6.

to the valve; but when the low-pressure cylinder is on top, as in Fig. 2, the upper bar of the frame prevents the use of a rocker, and the valve gear must then be made direct-acting. The method used to transmit the motion of the eccentrics to

the valve, when a double front rail is used, consists of a small crosshead and guides, Fig. 6, together with a valve stem that connects the valve with the crosshead, and a valve rod to connect the crosshead with the link. A later design employs a rocker-arm, which does not reverse the motion of the valve in relation to the link block, and uses a transmission bar. When a direct-acting valve mechanism is used, the eccentrics must be

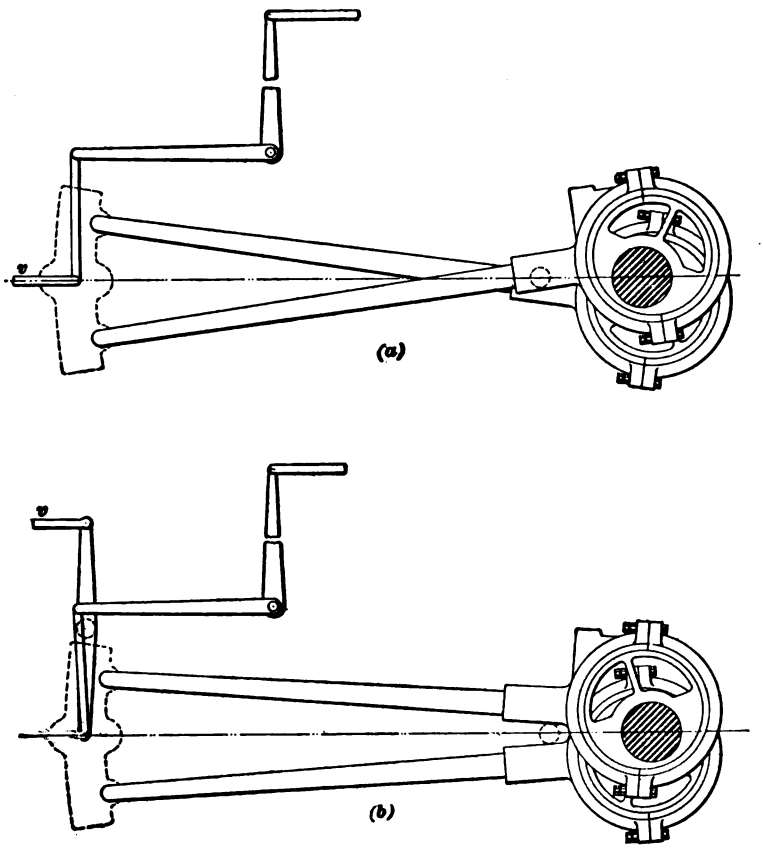

FIG. 7.

placed on the driving axle as shown in Fig. 7 (*a*), view (*b*) showing the position of the eccentrics on the driving axle relative to the main pin when an indirect motion is used. It

will be noticed, view (*a*), that with a direct motion the eccentric rods are crossed when the engine is on the forward center, and the rod of the upper eccentric is connected to the bottom of the link; with an indirect motion, however, the rods are not crossed, and the said rod is connected to the top of the link.

23. Valve Bushing.—In order that the steam may be properly distributed to the steam cylinders, it is necessary that the port openings in the steam chest (valve chamber *C*) be

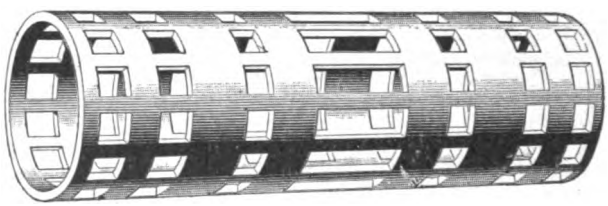

FIG. 8.

machined accurately to the required sizes. Now, since it would be both difficult and costly to machine the passages in the cylinder castings themselves, they are made larger than required for the finished ports, and the steam chest is bored out sufficiently larger in diameter than the diameter of the valve to permit the use of a bushing similar to that shown in Fig. 8. This bushing is made of hard cast iron, and is forced into the steam chest under pressure, so as to make steam-tight joints between the ports, thus preventing leakage of steam from one steam passage to another. All the ports in the bushing can be machined with great accuracy, so that a uniform distribution of steam is made to the cylinders under all conditions.

24. Steam Chest.—In Fig. 9 is shown a perspective view of the cylinders and saddle of a Vauclain compound, in which a section through the steam chest and high- and low-pressure cylinders is taken on the dotted lines *x y*, Fig. 1, the upper part being removed to show the interior of the steam chest and cylinders. *V* is the piston valve, *v* its stem, *R* and *Q* the high-pressure and low-pressure pistons, respectively, and *r* and *q* their rods. As will be seen, there are a number of chambers

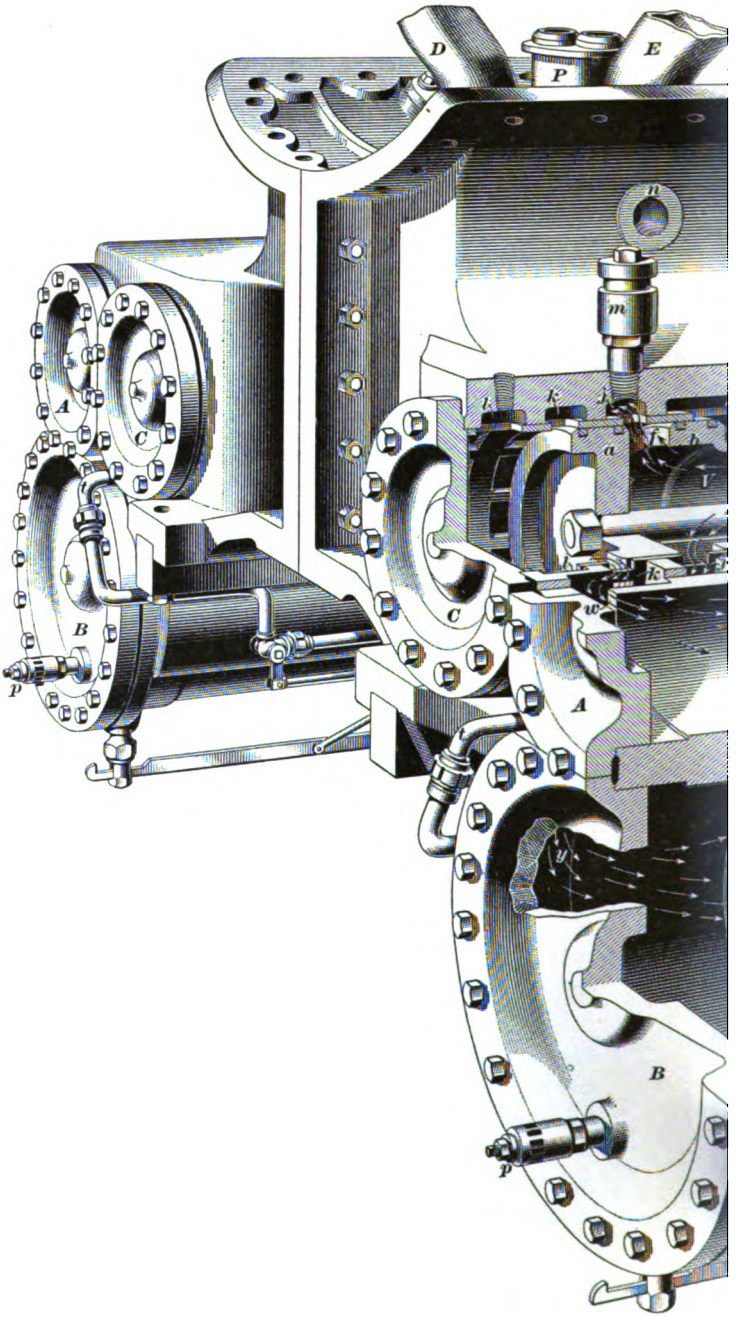

FIG. 9.

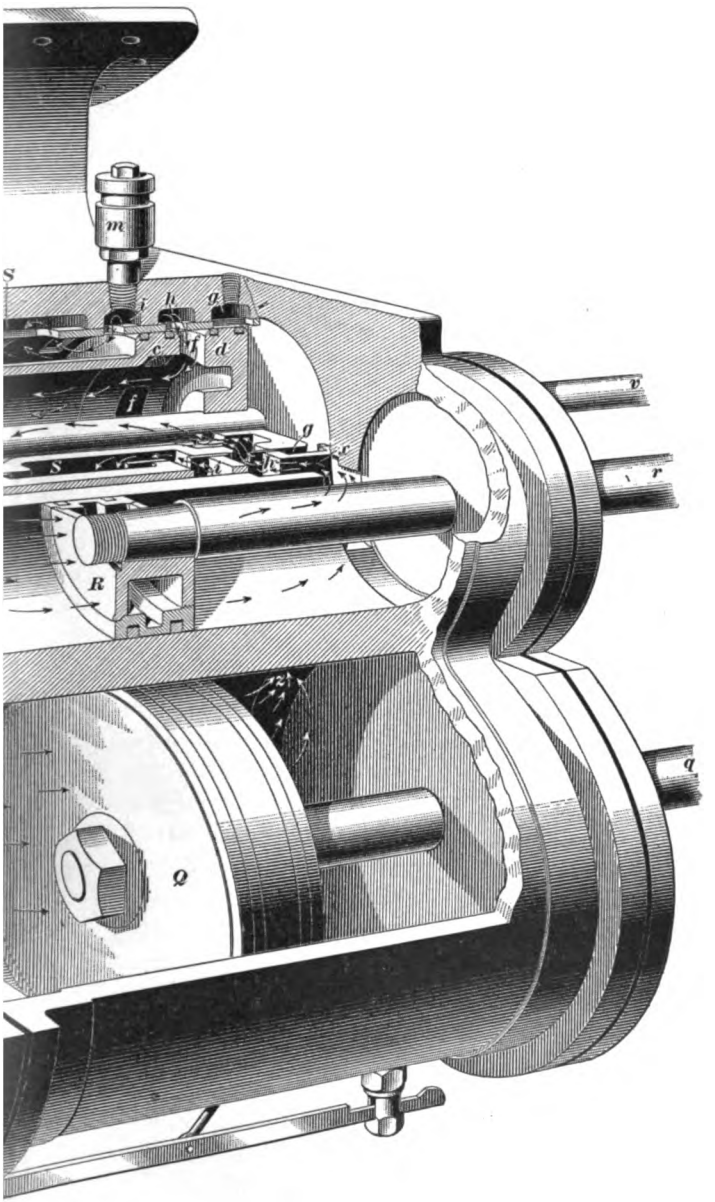
m
S
h
a
c
d
f
g
S
v
r
R
q
Q

cast in the saddle that extend completely around the valve bushing. The steam pipe *E* connects with a steamway (in the cylinder saddle) that divides into two branches; the end of one branch forms chamber *g*, while the end of the other forms chamber *l*, both of which surround the valve bush. Steam pipe *D* supplies steam to the right-hand cylinders. Chamber *k* is the steam-chest end of the steam passage *w* that leads to the front end of the high-pressure cylinder *A*, while chamber *h* is the end of the other steam passage *x* that leads to the back end of the cylinder. The chambers *j* and *i* are the steam-chest ends of the steam passages *y* and *z* that lead to the front and back ends, respectively, of the low-pressure cylinder *B*. Chamber *S* forms the steam-chest end of the exhaust steamway (in the cylinder saddle) that leads to, and connects with, the exhaust pipes *P*. It will thus be seen that steam from the boiler enters the steam chest through the end cavities *g* and *l*, so that, when the throttle is open, the two ends of the steam chest are filled with steam. Also, it will be seen that the steam must pass from the steam chest through chamber *k* or chamber *h* in order to get into the front or back ends of the high-pressure cylinder, respectively. Also, for steam to enter the front or back ends of the low-pressure cylinder, it must pass through chamber *j* or chamber *i*, respectively. Steam, in exhausting to the atmosphere from the lower pressure cylinder, must pass out through the cavity *S*. Two relief valves *m*, *m* are screwed into holes that lead to the passages *j* and *i*, and another valve is screwed into a hole *n* leading to the steamway in the cylinder saddle. The arrangement of the cylinders, steamways, and cavities in relation to the steam valve will be more clearly seen by referring to Fig. 10.

OPERATION.

25. Forward Stroke.—The views of the steam chest and cylinders in Figs. 10 and 11 are not true sectional views, but are conventional views made up for the purpose of showing the relation of the high- and low-pressure cylinders to the steam valve, as well as the relation of the chambers *h*, *i*, *j*, etc. to the

steamways *w*, *x*, *y*, and *z* that lead to the ends of the two cylinders. Also, the operation of the engine can be more clearly shown by means of these figures.

Suppose the engine to have been working, so that both cylinders are working steam; then the operation for the forward stroke, Fig. 10, will be as follows: With the valve in the position shown, steam from the steam chest enters the back end of the high-pressure cylinder *A* through chamber *h* and the steamway *x*, as indicated by the arrows, forcing the piston towards the front end of the cylinder. The steam in the front end of the high-pressure cylinder is exhausting through the steamway *w*, chamber *k*, cavity of valve *V*, chamber *i*, and steamway *z*, into the back end of the low-pressure cylinder *B*, as indicated by the arrows, thus forcing the low-pressure piston towards the front end of its cylinder also. The exhaust steam in the front end of the low-pressure cylinder is exhausting to the atmosphere through the passage *y*, chamber *j*, cavity of valve *V*, and the exhaust port *S*, as indicated.

26. Backward Stroke.—In the backward stroke of the pistons, Fig. 11, the valve is admitting steam to the front end of the high-pressure cylinder, as shown, while the steam in the back end of the high-pressure cylinder is exhausting into the forward end of the low-pressure cylinder; hence, both pistons are being forced towards the back end of their cylinders. The exhaust steam in the back end of the low-pressure cylinder is passing through the steamway *z*, chamber *i*, and cavity of valve, into the exhaust passage *S*. By comparing Figs. 10 and 11, it will be seen that the high-pressure cylinder receives the steam directly from the boiler through the steam chest, while the low-pressure cylinder receives its supply of steam directly from the exhaust side of the high-pressure cylinder. In other words, the high-pressure cylinder receives steam from the boiler for a certain part of the stroke, allows it to expand practically for the remainder of the stroke, and then discharges it into the low-pressure cylinder, where it is still further expanded, after which it is discharged through the exhaust pipes in the usual manner. It is obvious that if this compound locomotive is started from

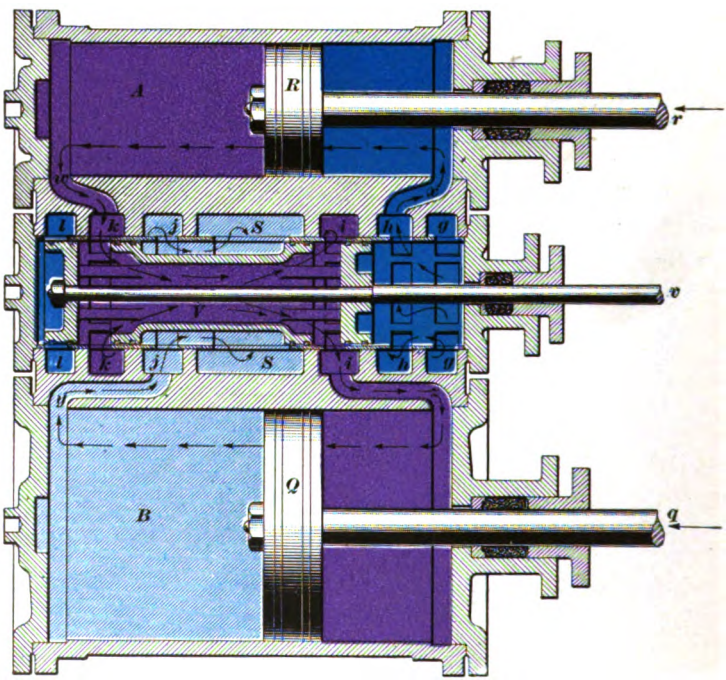

FIG. 10.

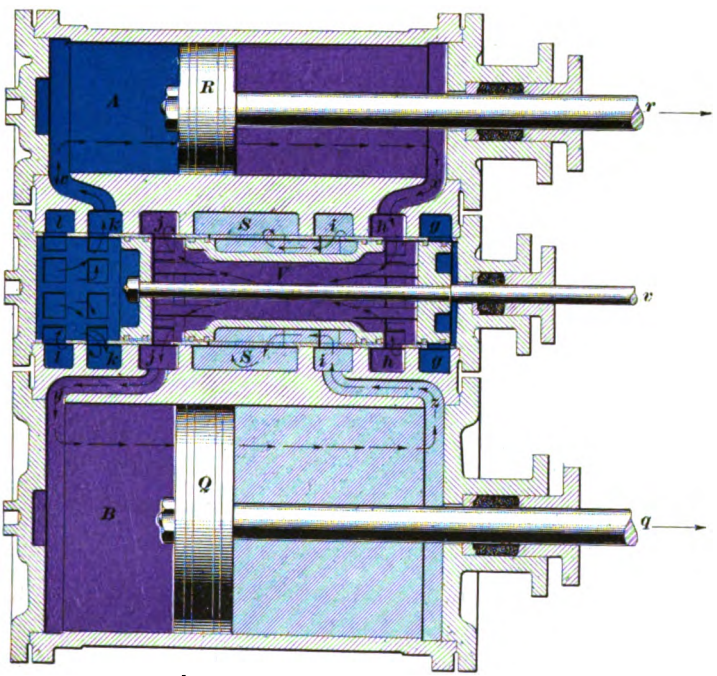

FIG. 11.

a state of rest while working compound, no steam can enter the low-pressure cylinders until after part of a revolution has been made by the drivers; hence, in that case, the duty of giving the train its first motion would fall entirely on the high-pressure cylinders, while the low-pressure cylinders would lend absolutely no assistance at the very time their help was most needed. This would not only greatly reduce the starting power of the locomotive, but, with a heavy train, it would subject certain parts of the driving gear to such strains as would

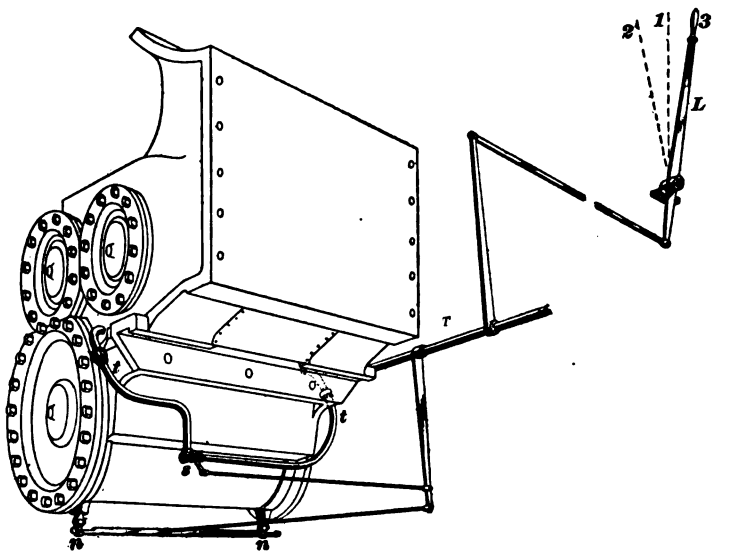

FIG. 12.

probably lead to breakdowns. To overcome this difficulty, it was found necessary to devise a means of admitting steam from the boiler directly into both the low-pressure and the high-pressure cylinders while starting the train; and the device by means of which this has been accomplished is known as the **starting valve.**

27. General Arrangement of Starting-Valve Gear. The arrangement of the **starting-valve gear** is clearly shown in Fig. 12. The valve *s* is the starting valve, and it is connected by the pipe *t* to the two steamways *h* and *k*, Fig. 11,

that lead to the opposite ends of the high-pressure cylinder. This valve is merely a *by-pass* valve, and it is operated by the same lever L in the cab that operates the cylinder cocks n. Another arrangement of the starting valve places it above the steam chest, in which case it has a separate lever in the cab for operating it, and it is not connected with the cylinder cocks. This starting valve is simply a plain plug cock in a straight pipe.

28. Construction of Starting Valve.—Sectional views of the **starting valve** are shown in Fig. 13 (a), (b), and (c). One end of the pipe t connects with the top opening W, the other end connects with the side opening U, while the small opening N on the bottom leads to the atmosphere. When the handle H is pointing directly down, as in view (a), the valve is closed, since the plug of the valve blanks all the openings. When the handle is moved to the forward position, view (b), the passage *3* through the plug of the valve connects the port opening N with port W, while the passage *4* connects with port U; hence, there is a direct opening to the atmosphere through the pipe *5*, while at the same time there is direct passage between the ports W and U through the passages *3* and *4*. Thus, when in this position, the valve not only acts as a by-pass valve, but also as a cylinder cock for the high-pressure cylinder, since steam can pass from one pipe t to the other through the passages *3* and *4* in the plug of the valve, or from either pipe to the atmosphere through port N and pipe *5*.

When the handle of the valve is in the position, view (c), the passage *4* in the plug connects with the port W, while the passage *3* connects with the opening U, and the port N leading to the atmosphere is blanked; hence, in this position the valve acts simply as a by-pass valve, allowing steam to pass through it and pipe t in either direction, but preventing any discharge of steam to the atmosphere through the port N. With the other type of starting valve, the opening at port N is omitted and the valve is simply a by-pass valve with but two positions.

29. Operation of Starting Gear.—The operation of the starting gear can best be explained by referring to Fig. 14. If the cylinder casting, Fig. 1, were cut through on the line $x\,z$,

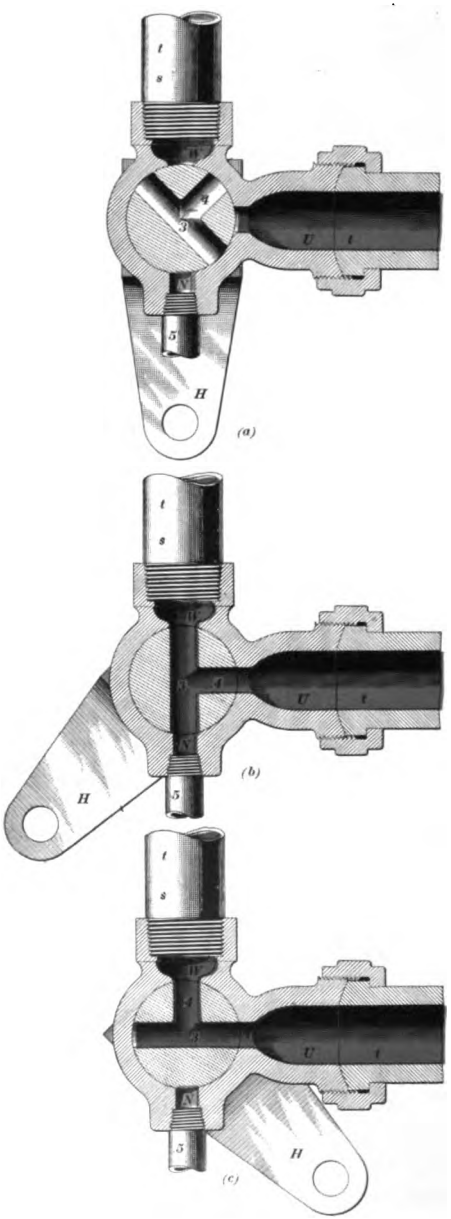

FIG. 13.

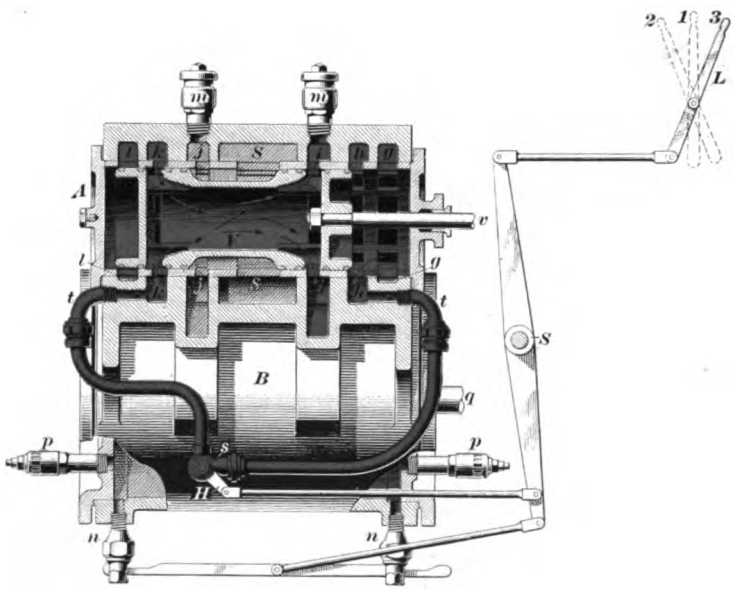

Fig. 14.

and the right-hand portion were removed, then the remainder would show a section somewhat as in Fig. 14. The high-pressure cylinder *A* cannot be seen, as it is on the far side of the steam chest, but the back side of the low-pressure cylinder *B* can be seen. It will be observed that one end of the pipe *t* is screwed into a hole that is drilled into chamber *k*; chamber *k*, it will be remembered, is one end of the steamway that leads to the front end of the high-pressure cylinder, and it opens also into the front end of the steam chest through the ports in the valve bushing. The other end of the pipe *t* is screwed into a hole that is drilled into chamber *h*, thus making direct connection between this end of the pipe, the back end of the high-pressure cylinder, and the back end of the steam chest. Thus the two ends of the high-pressure cylinder can be connected through the starting valve. The handle *H* of the starting valve is connected to the same lever as is the mechanism that operates the cylinder cocks, and when the lever *L* is in its middle position *1*, the starting valve is closed. When the engine is operated with the starting valve in this position, the engine is said to be working *compound*, since no **live steam** * enters the low-pressure cylinder. If the lever *L* is moved forwards to position *2*, the handle *H* will be moved forwards also, and the starting valve and the cylinder cocks to both the high- and the low-pressure cylinders will be open, and live steam can pass to the low-pressure cylinder through the starting valve, as indicated by the arrows. The engine is then said to be working *simple*, since live steam enters the low-pressure cylinders. If lever *L* is moved to position *3*, the handle will be moved to its back position; in this position, the cylinder cocks will be closed, but steam can still pass from the steam chest and high-pressure cylinder to the corresponding end of the low-pressure cylinder, as indicated by the arrows. For example, in the figure, the valve is forwards, and is admitting steam into the back end of the high-pressure cylinder through chamber *h*; at the same time, steam passes from chamber *h* through the first part of pipe *t*, the starting valve *s*, and the second part of pipe

* **Steam direct from the boiler.**

t, into chamber *k*, and thence through the valve *V* and chamber *i* to the back end of the low-pressure cylinder, as indicated by the arrows. In this position of the starting valve, also, the engine is said to be working simple. It should be noted that, since live steam enters the cavity *k*, it is free to fill the front end of the high-pressure cylinder and to act therefore as back pressure on the high-pressure piston. This, of course, reduces considerably the force with which the high-pressure piston is moved forwards, but this is more than compensated for by the increase of total effective force on the low-pressure piston, due to its greater area. The latter has about three times the area of the high-pressure piston; hence, for every pound of force exerted as back pressure on the high-pressure piston, the live steam exerts an effective force of 3 pounds on the low-pressure piston, and the power of the engine is correspondingly increased. However, the starting valve should not be used except in emergencies, such as when starting a heavy train or when in danger of stalling on a grade.

30. Relief Valves.—It is usual to supply the cylinders of locomotives with **relief,** or **vacuum, valves,** the duty of which is to prevent the formation of a vacuum in the cylinders that would draw in hot gases and cinders. Vauclain compounds are supplied with relief valves also, although they are situated differently from those on simple engines. As already remarked, a relief valve is screwed into the hole *n* (see Fig. 9) that leads to the steamway in the cylinder saddle; hence, if a vacuum tends to form in the steamway, or in the high-pressure steam chest or cylinder, this valve will open and admit air to prevent the formation of a vacuum. Also, the relief valves *m*, Figs. 9 and 14, are screwed into holes that lead to the cavities *j* and *i*, and help prevent the formation of a vacuum in the low-pressure cylinder.

A relief valve to supply air to the low-pressure cylinder when drifting is shown in Fig. 15 (*a*). The valve rod *V*, which extends through the front head of the steam chest and is provided with suitable packing, is hollow from the point *X* to the front end where the relief valve *R* is attached. A number of

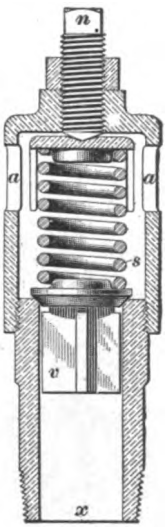

FIG. (a).

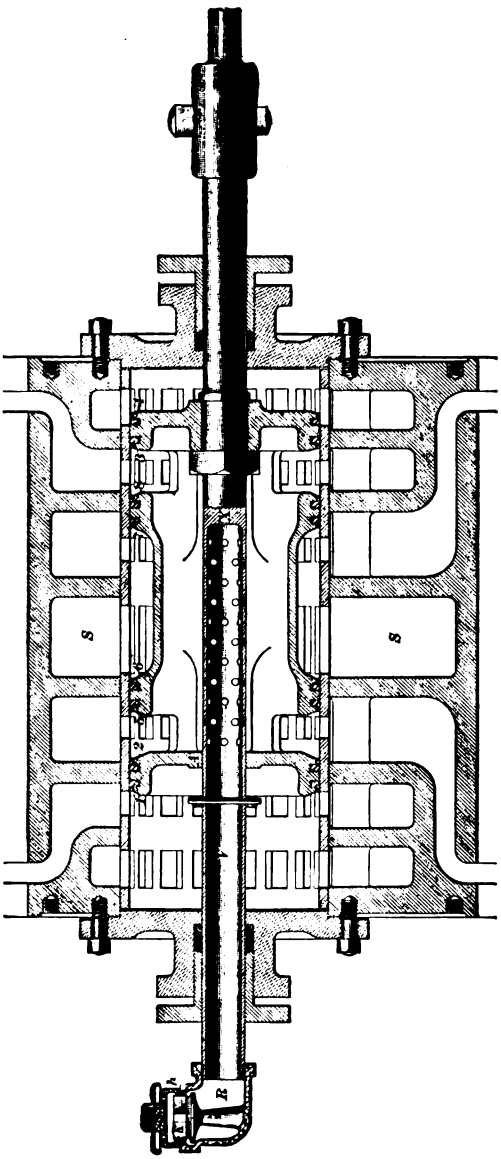

FIG. 15 (b).

holes are drilled through the rod, as shown, which establish communication between the inside of the piston valve and the atmosphere when the valve *K* is down off its seat *h*.

The space inside the piston is so connected to the low-pressure cylinder that when drifting with steam shut off the air from the atmosphere can flow in and relieve the partial vacuum caused by the movement of the low-pressure piston. When the engine is working steam the hollow valve rod fills with steam, which closes the valve *K*. By extending the valve rod in front, it acts as a support to the piston valve, and thus tends to reduce the wear on the bottom of the valve and bushing.

The low-pressure cylinders are also equipped with water-relief valves *p*, *p*, Fig. 14, attached to the front and back cylinder heads, to prevent the breaking of a cylinder head in case water should get into the cylinder. These water valves also act as safety valves to relieve excessive pressure of any kind, and they can be adjusted, by means of an adjusting screw, to open at any desired pressure. A sectional view of the water valve is given in Fig. 15 (*b*). The end *x* screws into the steam chest, and when the pressure on the valve *v* becomes great enough to compress the spring *s*, the valve will open and allow the excess pressure to escape to the atmosphere through the openings *a*, *a*. The tension of the spring *s* can be regulated by means of the adjusting screw *n*.

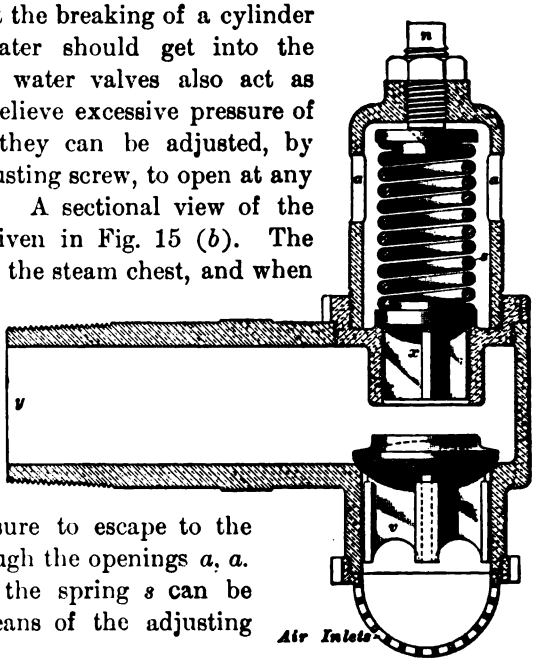

FIG. 16.

When an engine has the low-pressure cylinder on top, as in Fig. 2, a different arrangement must be adopted on the low-pressure cylinders, and a combined pressure and vacuum relief valve, similar to that shown in Fig. 16,

is used, one in each head of the low-pressure cylinder. If a vacuum tends to form in the cylinder, air enters the valve through the air inlets at the bottom, and, raising the valve *v*, passes on to the cylinder through *y*. Any excessive pressure in the cylinder will raise the valve *x* against the action of the spring and allow the excess of pressure to escape through the openings *a*, *a*. The tension of the spring *s* can be regulated by means of the adjusting screw *n*.

OPERATING.

31. General Considerations.—Before an engineer can hope to become a successful runner of compound locomotives, he must learn, first of all, to handle the reverse lever properly. The quadrant of the reverse lever is usually so made that it is impossible to cut off steam in the high-pressure cylinder at less than half stroke, and the reverse lever can be safely carried in any notch, from the corner to the half-stroke notch, without injury to the fire. This is due to the milder exhaust of the compound, which thus enables the fireman to carry a lighter fire than he would with a simple engine. Follow the old rule of carrying as light a fire as possible.

32. Handling Cylinder-Cock Lever.—Then there is the proper handling of the starting device and cylinder cocks. It is a good rule, when handling compounds, to always open the cylinder cocks in starting the locomotive from a state of rest, so as to permit the water of condensation to escape from the cylinders. Of course, by opening the cylinder cocks, the starting valve is opened, and live steam is admitted to the low-pressure cylinder, causing the train to start quickly and smoothly. Sometimes, however, as when in a crowded station, it is undesirable to open the cylinder cocks, in which event the engineer should move the cylinder-cock lever backwards to the position for admitting steam to the low-pressure cylinder without opening the cylinder cocks. If the cylinder cocks are opened in starting, they should be closed as soon as the cylinders are free of water, and, whatever the position of the

cylinder-cock lever, it must be moved to compound position (middle position) before the reverse lever is moved from the corner. If it is necessary to open the cylinder cocks when at full speed in order to relieve the cylinders of water, it may be done without moving the reverse lever from its position, since at high speeds the steam will not pass through the starting valves quickly enough to give an excessive pressure in the large cylinders. At slow speeds, however, the lever should always be in the corner during the time the starting valve is open. If it is necessary to open the cylinder cocks at slow speeds, first drop the reverse lever into the corner and let it remain there until the cylinder-cock lever has been moved to its middle position again. It is to be remembered that a locomotive will not make as good time with the starting valve open as with it closed, besides using a great deal more coal and water; hence, an engineer should never make a practice of running with the starting valve open, but should use it only in emergencies.

33. Handling Reverse Lever.—Experiment and also general experience tend to show that the simple engine is most economical when cutting off at about one-quarter stroke; the most economical point of cut-off for the compound engine, on the other hand, is about five-eighths stroke. Experiments show also that, as the reverse lever of the simple engine is notched towards the corner, the amount of water used per horsepower per hour increases rapidly, whereas the amount of water used by the compound increases at a much slower rate. This peculiarity of the two types of locomotives is quite noticeable, especially to an engineer that has handled both types. The rate for the compound increases quite rapidly, however, when it is being run with the starting valve open; hence, for the sake of economy, this valve should be used as seldom as possible. If, during the run, the locomotive is called on for an extra effort that tends to slow down the speed of the train, the reverse lever should be dropped—a notch or two at a time—soon enough to maintain the speed as nearly as possible. In this way less coal and water will be used than will be the case if the train is allowed to slow down considerably before the lever is dropped,

and then have to be brought up to speed again. Also, the unequal strain and wear on the crossheads, guides, and piston rods will be much less when working in the running cut-off than when using a very long cut-off or the starting valve. As the lever is dropped below the proper running cut-off, as well as when the starting valve is open, the strain on the high-pressure side of the crosshead is decreased and that on the low-pressure side is increased. For this reason, the lever should be dropped a notch or two early enough to avoid having to go clear into the corner, or opening the starting valve. The starting valve should not be opened until the reverse lever has been gradually notched forwards and is in the last notch, and the locomotive is in danger of being stalled, and it should be closed as soon as the danger of stalling is passed.

34. Handling a Vauclain.—In starting a train with a Vauclain compound, first place the reverse lever in the corner notch, then move the cylinder-cock lever to its forward position to open the cylinder cocks and starting valve, and then open the throttle. As soon as the cylinders are free from water and the train has attained a speed of from 4 to 6 miles per hour, move the cylinder-cock lever to its mid-position, thus closing both the cylinder cocks and the starting valve, and causing the engine to work compound. If the engine is equipped with the other style starting valve, move it to *closed* position. *After closing the starting valve,* and as the speed of the train increases, hook up the reverse lever a notch or two at a time until the proper speed is attained. If the locomotive at any time develops more power than is required with the reverse lever in any notch, hook it up a notch or two more; and if, with the lever in the last notch and the high-pressure cylinder cutting off at about half stroke, it should still develop too much power, partially close the throttle and thus reduce the power developed. If running on a down grade on which it is not necessary to work steam in the cylinders, keep the throttle open just a "crack," so as to allow sufficient steam in the cylinders to assist in lubricating the parts and prevent the formation of a vacuum, which retards the movement of the piston. A sufficient amount of

steam for this purpose will just keep the relief valves closed. Should the grade be such as to prohibit this practice, then close the throttle and gradually move the reverse lever—a few notches at a time—towards the forward corner, and then move the cylinder-cock lever to its backward position, in which it opens the starting valve only, since this allows air to circulate either way through the pipe *t*, thus relieving the vacuum formed and making the engine drift more easily.

35. A reference to Figs. 13 and 14 will show that, in this position of the starting valve, the pipe *t* connects the two ends of the high-pressure cylinder together; also, since the chamber *i* leads to the back end of the low-pressure cylinder, it will be plain that, with the steam valve *V* (i. e., the piston valve) in the position shown (see also Fig. 10), the front end of the high-pressure cylinder is connected with the back end of the low-pressure cylinder through the valve *V*; while, with the valve *V* in its back position (see also Fig. 11), the back end of the high-pressure cylinder connects with the front end of the low-pressure cylinder through chamber *j*. Thus, it will be seen that, when the engine is drifting with the starting valve open, the air that is compressed on one side of the high-pressure piston is free to flow to the other side of both the high-pressure and the low-pressure pistons, thus preventing, to a considerable extent, the formation of a vacuum there. Also, when the style of cylinder cock indicated is used (with small check valve), and the starting valve is in its backward position—so as not to open the cocks—any vacuum in either end of the low-pressure cylinder will cause the check-valve of the cylinder cock on that end to open and admit air, while the pressure in the opposite end of the cylinder, due to compression, will hold the check-valve in the other cylinder cock seated. It is better that the cylinder cocks should not be opened when drifting, as otherwise the air discharging from the low-pressure cylinder carries oil along with it, and, consequently, the cylinders are more liable to become dry and cut. The proper position for the reverse lever when drifting is as near the corner as practicable.

On an up grade, as soon as the engine shows signs of slowing

down, drop the reverse lever a notch or two, and continue to notch forwards as necessary until the lever is in the corner notch; then, should the train continue to slow up so that there is danger of stalling, open the starting valve until the danger is past, whereupon it should be closed. Compound engines of this type require about the same amount of cylinder oil as a simple engine of equal size and power; hence, the lubricator cylinder feeds should be set accordingly. Also, the wear of the crosshead and guides requires close attention to prevent lost motion. On account of the unequal strains that the crosshead is subjected to at all cut-offs, other than the proper running cut-off, the wear on some parts of the crosshead is excessive. The successful operation of this type of compound depends largely on the condition in which the crossheads are maintained. The wearing surfaces of the guides and crosshead are now being made considerably larger than formerly, so that the wear is much reduced.

BREAKDOWNS.

36. Broken Main Rod.—In the event of a main rod breaking, place the steam valve on that side in the center of the valve seat, as in Fig. 5—in which position all the ports are covered—and clamp it there, remove the broken rod, and securely clamp the crosshead; then run in with the other side. In engines having the direct valve gear, in which the valve stem is connected to a small crosshead, the valve will be properly placed if this crosshead is blocked so as to be in the center of the guides.

37. Broken High-Pressure Piston Rod.—In the event of a broken high-pressure piston rod, it is possible to proceed without taking down that side of the engine. Take off the front cylinder-head—or the pieces, if broken—remove the piston, and then plug the piston-rod hole in the back cylinder head from the inside. Next, replace the front head, if unbroken; or, if broken, clamp a heavy board over the end of the cylinder so as to make a joint as nearly steam-tight as possible; the engine is then ready for business. The steam will be distributed to this cylinder as though the piston were in place;

but, instead of doing work there, it will pass directly through the steam valve to the low-pressure cylinder, the same as the exhaust steam would. Of course, only three cylinders will be available for work, but the locomotive can be handled the same as before the accident occurred.

38. Broken Low-Pressure Piston Rod.—In case this piston rod breaks, take off the front cylinder head, remove the piston, and plug the piston-rod hole in the back cylinder head from the inside, as in the case of the high-pressure cylinder. Replace the cylinder head, and proceed with the run, using three cylinders. In this case, also, the locomotive can be run either simple or compound. If the front head is broken also, you can proceed without it, after removing the piston, the exhaust steam from the high-pressure cylinder being allowed to exhaust through the opening thus made. If the escaping steam obstructs the view so that it is dangerous to run with it thus escaping, try to board up the end of the cylinder, or, failing in that, take down that side of the engine and proceed by using the other side. If the cylinder head only is broken, proceed as above; only in that event do not remove the piston.

39. Broken Valve Stem.—In the event of a broken valve stem, clamp the valve in the center of its seat so as to cover all the ports, then take down the main rod, securely clamp the crosshead, and run in with the other side.

40. Other Breakdowns.—Broken packing rings, in either the steam valve or cylinder pistons, are very difficult to detect, and generally can only be noticed in their effect on the engines; that is, when the rings are faulty, the engine steams poorly and will not make time on the road. The low-pressure piston packing-rings require renewal more frequently than those of the high-pressure piston. Sometimes the cylinder-cock shaft *T*, Fig. 12, becomes strained, so that, when the cylinder-cock lever is moved, it will open the starting valve on one side of the engine, but will not open the one on the other side. This causes the exhaust to sound alternately light and heavy, and the trouble is very apt to be attributed to the valve gear; hence, before altering the valve gear, examine the starting valves, to

see whether they open and close simultaneously, and examine also the steam valve and low-pressure piston for broken rings.

41. Blows.—It is of great importance to be able to accurately locate blows in this type of compound, without having to make an actual examination of all the parts through which the blow is liable to occur. This is especially true in the low-wheel type of locomotive where the steam chest is located low down and inside the frames. In this arrangement it is necessary, in many cases, to drop the engine truck in order to get the valve out for examination, and then it may be found to be all right and that the trouble is elsewhere. The engineer is first warned of a blow by noticing a peculiarity of the exhaust. When there is a leaky valve or a leaky piston packing, the sound of the exhaust differs somewhat from that produced when there is a derangement in the valve gear, so that by noting the position of the crankpin as the exhaust occurs and listening to the sound of the exhaust as the engine is run slowly along, the source of the blow can usually be determined. If the exhausts occur at irregular intervals and one exhaust is heavier and one lighter than the other two, the trouble will be found somewhere in the valve motion, and its location and remedy will be the same as in a simple engine. If the exhausts are at regular intervals but of varying volume, the trouble will be found in the piston or valve packing, or in the starting valve or its connections. When running slowly, watch the right side, and if it is found that every time the engine passes the quarters a heavier exhaust occurs than when it passes the centers, either there is a leak of live steam into the low-pressure cylinder on the left side, thus accounting for the heavy exhaust from that side, or there is a leak past the low-pressure piston on the right side, which allows some of the steam to escape before the exhaust takes place, thus reducing the volume of sound when the exhaust does occur. In some cases the irregularity may be caused by the connections to the starting valve being out of order. When the cylinder cocks and starting valve are operated by one lever, the starting valve is under the cylinder, and frequently the rods and lever

connections are bent by striking obstructions along the road; this alters their length so that with the lever in the cab in its proper positions the altered length of the connections will throw the starting valve out of its proper position. If the connections are so bent that the starting valve is opened when the cylinder-cock lever is in compound position (position *1*, Fig. 12), it will allow live steam to go to the low-pressure cylinder on that side, and a heavy exhaust will occur from that side. If by placing the cylinder-cock lever in live-steam position (position *3*, Fig. 12) the exhausts are made equal, the trouble will probably be found in the connections. But such a condition might be had that when the lever is changed one starting valve would be closed and the others opened, which would still give the irregular exhaust but the time of occurrence would be reversed. An examination, however, will quickly show if this is the trouble, as with the cylinder-cock lever in compound position the starting-valve lever should be at right angles with the rail.

If the starting valve is all right, but it is thought that the engine is not doing its work as well as usual, look for the trouble on the side from which the light exhaust is coming, which, in this case, is the right side. To determine this, place the engine on the quarter on the right side with the reverse lever in the corner and the starting valve in position *3*, Fig. 12 (live-steam position), open the throttle and raise the cylinder-cock valves by lifting the slide rod, and if steam escapes from both cylinder cocks in considerable quantities it will indicate that the low-pressure cylinder packing is leaking on that side. This test is practically the same as the test for a cylinder packing blow in a simple engine.

The trouble might be in the valve packing rings *5* and *6* or *7* and *8*, Fig. 15 (*a*), though this is not likely. This can be proved by bringing the reverse lever to the center notch, when if the rings *5* and *6* or *7* and *8* are leaking, steam will continue to blow out of the cylinder cock until all the steam trapped in the inner cavity of the valve escapes. If but one pair of rings are leaking the exhaust will indicate this by giving three normal exhausts and one light one.

If the trouble is not found in the right side, the heavy exhaust is the abnormal one, and the trouble should be looked for on the left side. Place that side of the engine on the quarter, with the starting valve in closed or compound position, place the reverse lever in the corner, and open the throttle. An indication of pressures in the ends of the high-pressure cylinder can be had by slacking off on the union nuts at each, end of the live steam pipe *t*, Fig. 12. If steam blows from each it indicates either the valve or the high-pressure piston packing blowing. If, on bringing the reverse lever to the center notch, the blow ceases, the trouble will be found in the high-pressure piston packing; but if the blow continues, it will be the valve packing, though this does not prove that the piston packing is not blowing also. To determine if it is the piston packing, the valve packing must be made tight, and then if the engine still blows it indicates a blow in the piston packing. If the blow is past either pair of valve rings *1* and *2* or *3* and *4*, a heavy exhaust will be had from each end of the cylinder, as steam leaking into either end of the inner cavity of the valve will find its way into whatever port the other end of the cavity may be in connection with. When indicator plugs are placed in the cylinders they may be removed for the indication of pressures in the test. Most engines that have the starting valve independent of the cylinder cocks have cylinder cocks leading from the high-pressure cylinders, and these, when opened, will be the most convenient indication of the pressure in the opposite ends of the high-pressure cylinder. Sometimes the steam-chest bushing does not make a tight fit with the walls of the chest and allows steam to leak from one part to another, giving a blow that can only be located after all other possible places for a blow have been examined. By tapping with a hammer on the inside of the bushing, the defective joint can sometimes be determined by the difference in sound.

Small pieces of broken packing rings find their way into the cylinder cocks and get under the valves and hold them open, thus giving a sure indication of which side to look for the trouble. The large size cylinder cocks used in this type of engine make it imperative that when one is broken off, as is

frequently the case, the opening be plugged securely, as the steam blowing out naturally affects the power of the locomotive, and will cover the working parts with dirt and gravel. To plug these holes securely, place the engine on the center, so that the following head will be over the opening; then make a wooden plug of a proper fit, split it on the small end and insert a wedge in the split, and then drive the plug in securely. It is a good plan to make a small groove in the side of the plug to allow the accumulation of water in the cylinder to drip out.

BALDWIN TWO-CYLINDER COMPOUND.

DESCRIPTION.

42. General Arrangement.—The general arrangement of the high- and low-pressure cylinders and of the intercepting valve of the **Baldwin two-cylinder compound locomotive** is clearly shown in Fig. 17. In this type of compound, the high-pressure and low-pressure cylinders are arranged similarly to the cylinders of a simple engine, and the distribution of steam to the cylinders is effected by means of slide valves operating in the steam chests *S*, *S*. As will be seen, there is but one steam pipe *D* in the smokebox, and that connects with the steamway in the cylinder saddle that leads to the steam chest of the high-pressure cylinder *A*. The end *Y* of the receiver connects with a special passage in the saddle that leads to the intercepting valve *C*, while the other end *Z* of the receiver connects with the steam passage that leads to the steam chest of the low-pressure cylinder *B*. The exhaust pipe *P* connects with the regular exhaust passage leading to the low-pressure cylinder, and also, through a special passage, with the intercepting valve, which is situated in the same half saddle as the high-pressure cylinder; hence, by the action of the intercepting valve, as will be explained, the exhaust steam from the high-pressure cylinder may be made to go either through the receiver *Y Z* and the cylinder *B* and its exhaust passage to the exhaust pipe *P*—as when the engine is working compound—or direct through the special passage to the exhaust

pipe and the atmosphere without entering the receiver, as when working simple. Also, there is a special passage that connects with the steamway to the high-pressure cylinder and leads through the reducing valve K to the steam chest of the low-pressure cylinder; it is through this passage that live steam is admitted to the low-pressure cylinder while the engine is being worked simple.

43. Intercepting Valve.—If the cylinder saddle, Fig. 17, were cut through on the line $x\,y$, and the high-pressure cylinder

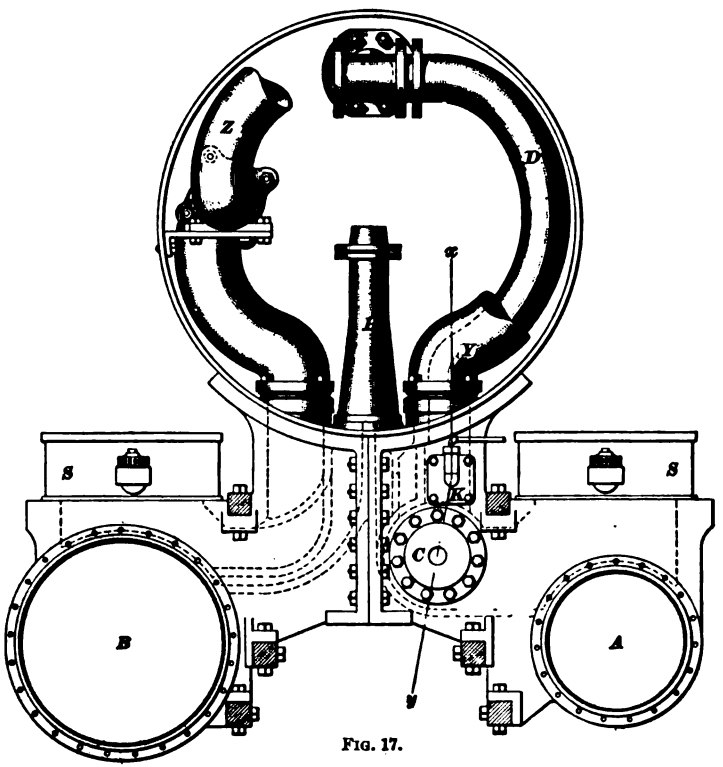

FIG. 17.

part removed, the left-hand part would present a sectional view of the intercepting and reducing valves similar to that shown in Figs. 18 and 19, depending on whether the intercepting and reducing valves were in simple or in compound position.

The intercepting valve consists of two pistons *a* and *b* connected together by means of the rod *x*, which also holds the pistons a definite distance apart. The valve is made to work steam-tight within the bushing *d* by means of packing rings, as shown. The bushing is provided with three ports *l*, *m*, *n* that connect with the chambers *F*, *c*, and *I*, respectively. Chamber *F* connects with the exhaust steamway of the high-pressure cylinder, chamber *c* connects with the special passage spoken of that leads direct to the exhaust pipe, while chamber *I* connects with the end *Y* of the receiver. When the engine is working simple, the spring *s* holds the intercepting valve in its extreme backward position against the head *h*, Fig. 18, in which position the cavity between the pistons *a* and *b* connects chambers *F* and *c*, and the piston *b* cuts off port *n*, thus closing communication between the chambers *c* and *F* and chamber *I*. When working compound, the valve is held in its extreme forward position, as shown in Fig. 19, in which position the cavity in the valve connects the chambers *F* and *I*, and the piston *a* closes port *m*, Fig. 18, leading to chamber *c*. The valve is moved forwards (to compound position) by admitting steam pressure to the chamber *Q* between the piston *a* and the head *h*; it is moved backwards (to simple position) by removing this pressure and allowing the spring *s* to force the piston back.

The duty of the intercepting valve, it will be observed, is simply to divert the exhaust steam of the high-pressure cylinder as it issues from chamber *F*, either directly to the exhaust pipe through chamber *c*, as when working simple, Fig. 18, or through chamber *I* into the receiver and thence to the low-pressure cylinder, as when working compound, Fig. 19. Live steam from the steam pipe *D* enters the steamway *G* and flows around the intercepting valve to the high-pressure steam chest; the intercepting valve, however, does not affect the live steam, its duty being entirely with the exhaust steam of the high-pressure cylinder.

44. Reducing Valve.—When the engine is working compound, live steam enters and is expanded in the high-pressure cylinder *A*, and, after expansion, is exhausted into the

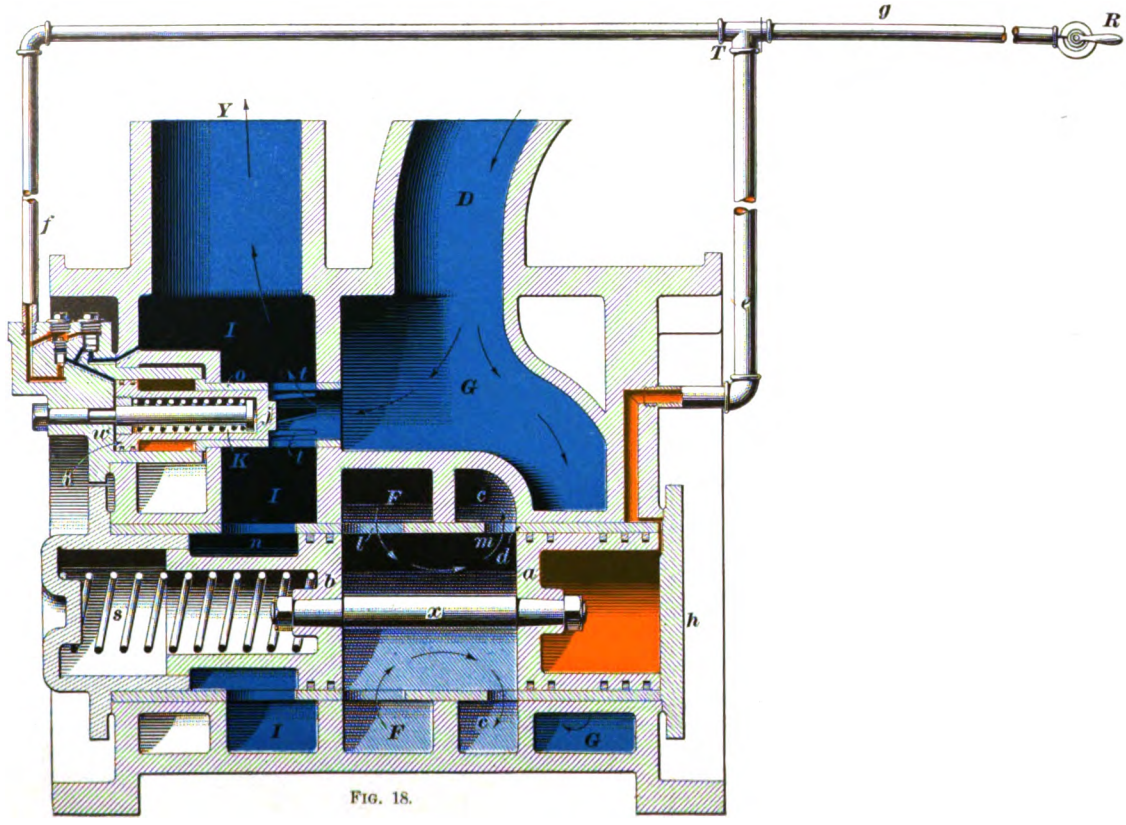

FIG. 18.

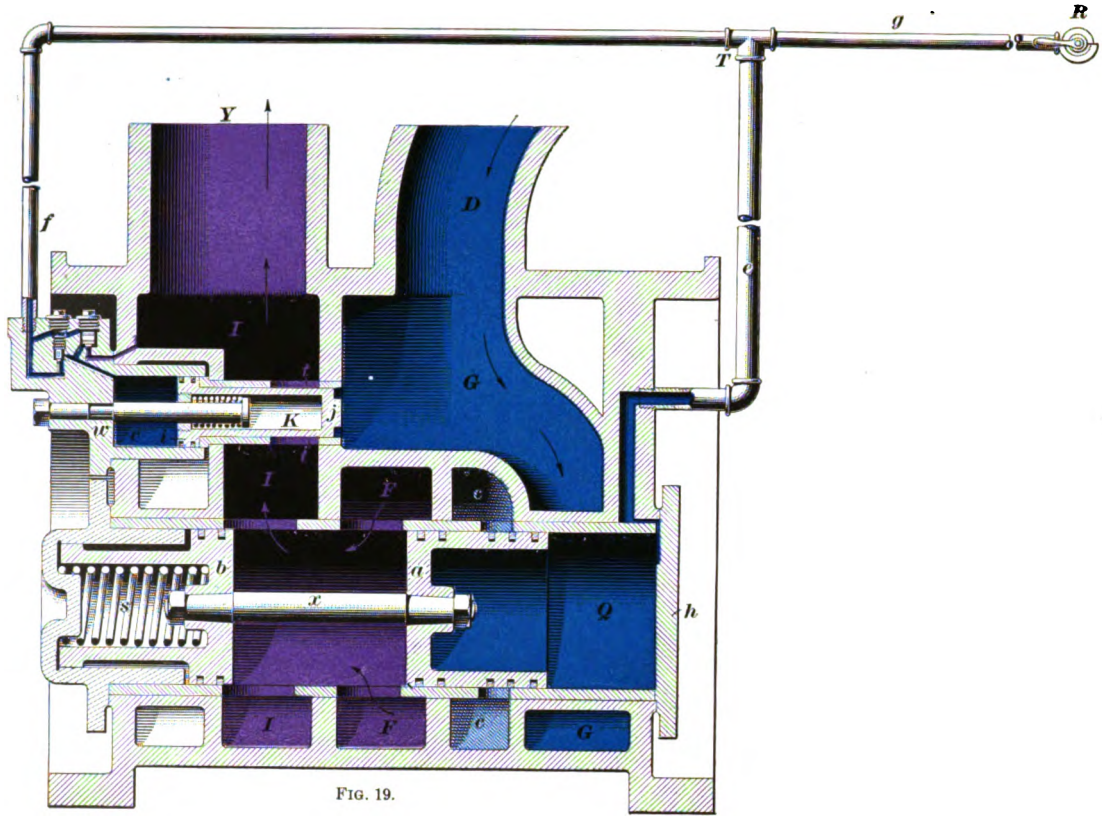

FIG. 19.

receiver *YZ*, from whence it passes to the low-pressure cylinder *B*. In the compound position, therefore, the steam supply for the low-pressure cylinder comes from the high-pressure exhaust steam; but, in the simple position, this exhaust steam discharges directly into the atmosphere, and it then becomes necessary to supply the low-pressure cylinder with steam at a reduced pressure from the boiler. Also, since the area of the low-pressure piston is about two and one-half times the area of the high-pressure piston, the pressure of the steam admitted into the low-pressure cylinder must be regulated so that the total force exerted on the two pistons will be equal. It is the duty of the *reducing valve K* to perform both of these functions. In other words, one duty of the reducing valve is to admit live steam at a reduced pressure into the receiver when the engine is working simple, and to exclude live steam from the receiver when the engine is working compound, since it is not then required; the other duty is to so regulate the pressure in the receiver, when live steam is being admitted, that the total force exerted on the pistons in the two cylinders will always be equal, regardless of the pressure of the steam in the steam pipe. The reducing valve remains inoperative during the time the engine is working compound.

45. The reducing valve *K*, Fig. 18, consists of two pistons, *i* and *j*, connected together by means of a sleeve. A spring is so arranged within the sleeve that it tends to hold the valve open—that is, in its forward position—as shown in Fig. 18. The valve works steam-tight within a bushing *o*, the back end of which is furnished with the ports *t*, so that, when the valve is in the position shown in Fig. 18 (position for working simple), live steam can pass from the chamber *G* through the ports *t* and into chamber *I*, and thence to the receiver. When the valve is moved to the position shown in Fig. 19 (compound position), no steam can pass between the chambers *G* and *I*, because the ports *t* are covered by the valve *K*. This valve can be moved, at will, backwards to its compound position by introducing steam pressure into the space *v*, between the piston *i* of the valve and the end *w* of chamber, while it is

forced forwards to simple position by the action of the spring as soon as the pressure in chamber *v* is removed. How the valve performs its functions can best be explained in connection with Fig. 20, which is a sectional view of the valve in simple position. In this position, live steam flows from chamber *G* through the ports *t* into chamber *I*, and thence to the receiver, as indicated by the arrows. While the reducing valve must be *made* to perform *one* of its duties, it is perfectly automatic in the performance of its other duty, namely, the work of regulating the pressure in the receiver when the engine is working simple. The reducing valve is then operated automatically by the pressure in the receiver, and it will close the ports *t* as soon as the pressure in the receiver is great enough to equalize the force exerted on the two pistons *j* and *i*, or it will open the ports should the pressure fall below that amount. Its operation as a pressure regulator is as follows: Live-steam pressure in chamber *G* is exerted on the face of the piston *j*, and tends to hold the valve open; the steam pressure in the receiver, on the other hand, passes through port *e*, raises valve *6*, and then flows through the passages *5* and *4* into chamber *v* (see Fig. 20), and thus acts against the face of the piston *i*, with a tendency to close the valve. Now, the piston *i* has about two and one-quarter times* the area exposed to the receiver steam that piston *j* has exposed to the live steam; hence, when the pressure in the receiver is a little less than half that of the live steam, the valve will be moved backwards and the ports *t* closed. When the pressure in the receiver is reduced so that the force exerted by the steam on *j* is sufficiently greater than that exerted on *i* to compress the spring, the valve will open; and so the action of the valve is carried on.

46. When the engineer wishes to work the engine compound, he admits steam (through the pipe *f*) to chamber *v* back of the piston *i* of the reducing valve; steam flowing from *f* passes through the passages *1* and *2*, raises valve *3*, and passes

* The two pistons *j* and *i* are so proportioned that equal cylinder power will be given to both sides of the engine, regardless of the amount of pressure carried in the boiler.

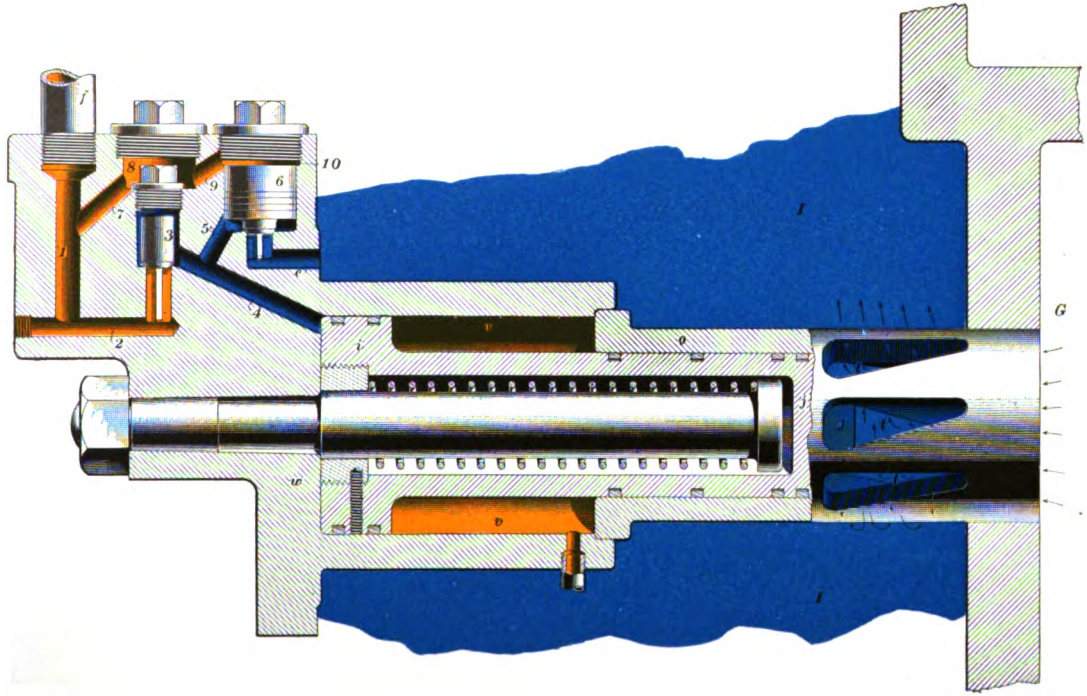

FIG. 20.

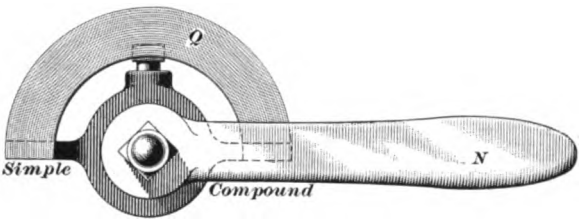

(b)

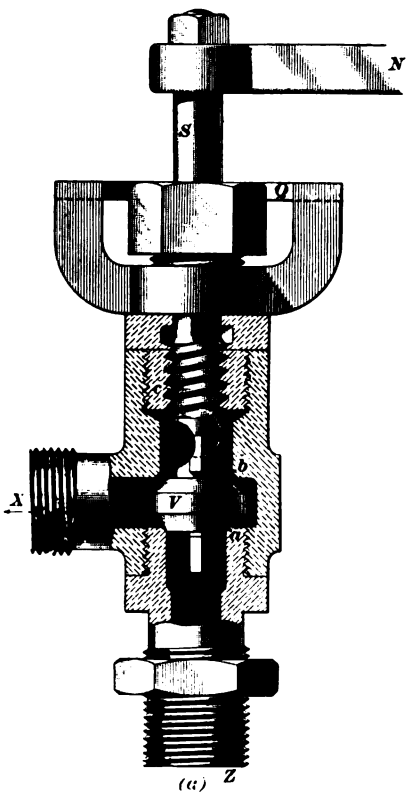

(a)

FIG. 21.

on through *4* to chamber *v*, and forces the reducing valve backwards, closing the ports *t*. Live steam cannot then enter the receiver, which is being supplied with steam by the high-pressure cylinder exhaust. It will be observed that pressure can pass to chamber *10* above valve *6* through the passage *7*, chamber *8*, and passage *9*; hence, valve *6* is held firmly on its seat during the time that the pipe *f* is charged with pressure.

47. Operating Valve.—Referring to Figs. 18 and 19, it will be seen that the pipes *e* and *f* are joined together at *T*, and are connected, by means of pipe *g*, to the operating valve *R* that is situated in the cab. It is by means of this valve that the engineer is enabled to change, at will, the intercepting and reducing valves from the simple to the compound position, or from the compound to the simple position. It will be noted that with this type of compound the intercepting and reducing valves are held in *compound* position by steam from the cab, whereas all other types, except the Pittsburg, are held in *simple* position by steam or air from the cab.

A cross-sectional view of the operating valve is shown in Fig. 21 (*a*), and a plan of it in Fig. 21 (*b*). As will be seen, the valve has three pipe connections, marked *X*, *Y*, and *Z*, respectively; the connection with pipe *g*, Fig. 18, is made at *X*, Fig. 21, the connection to the boiler at *Y*, while a pipe that opens to the atmosphere is connected to *Z*. Part of the valve stem is broken away, view (*a*), in order to show the steam connection *Y*. The valve *V*, it will be observed, has two seats, one at *a*, upon which it is shown seated, and the other at *b*. A handle *N* is connected with the valve spindle *S*, and the spindle is provided with screw threads *c*, so constructed that half a turn of the handle will move the valve *V* from one of its seats to the other, depending on the direction in which the handle is turned. There are two positions in which the handle *N* is carried; these positions, one *simple* and the other *compound*, are marked on the quadrant *Q*. When the handle is in the position marked *compound*, the valve *V* is on its lower seat *a*, as shown in the figure, and steam can then flow from the boiler through the connection *Y*, past the valve, and out through *X* and pipes *g*, *e*, and *f*, Fig. 19, to the

chambers Q and v, forcing the intercepting and reducing valves to their compound positions. The engine is then working compound. By turning the handle to the position marked *simple*, the valve V is raised to its upper seat b, thus cutting off the supply of steam from the boiler through Y; also, by raising the valve, the opening into the drip pipe Z is uncovered, and the steam pressure caught in the pipes g, f, and e discharges instantly to the atmosphere. This removes all pressure from the chambers Q and v; and, consequently, the intercepting and reducing valves assume their simple positions, Fig. 18, and the engine works simple.

OPERATION.

48. The Baldwin two-cylinder compound can be worked either as a simple or as a compound engine, at the will of the engineer, and the change can be made simply by moving the handle of the operating valve to the proper position. When the engine is at rest, the handle of the operating valve is in the position marked *simple*, and the engine is then in condition to work as a simple, or single-expansion, engine, since both the intercepting and reducing valves are in the *simple* position. The intercepting valve diverts the exhaust steam from the high-pressure cylinder into the special exhaust passage c, and thence to the exhaust pipe, while, at the same time, the reducing valve is wide open, allowing live steam to flow from chamber G into the receiver, from which the low-pressure cylinder draws its supply.

The locomotive can be used as a simple engine in making up trains and in starting trains; but, when the train is once fairly started, the engine should be worked compound, which is accomplished by moving the handle of the operating valve to *compound* position. This, as has been explained, admits steam from the boiler into the pipes e and f, which instantly moves both the intercepting and the reducing valves to the compound position. The exhaust steam from the high-pressure cylinder then passes into the receiver, instead of passing directly to the atmosphere, and forms the supply for the low-pressure cylinder, the reducing valve being held closed

by the steam pressure in chamber *v*. Should there be danger of stalling at any time, the locomotive should be changed to work simple until the danger of stalling is past, since more power is developed when working simple than when working compound. The reason a cross-compound has more power when working simple than when working compound, is that at such times the high-pressure piston is relieved of the back pressure from the low-pressure cylinder; in this case the high-pressure cylinder exhausts directly to the atmosphere. In addition to this, live steam at about half the boiler pressure is used in the low-pressure cylinder.

BREAKDOWNS.

49. Broken Main Rod: High-Pressure Side.—In the event of a main rod on the high-pressure side breaking, take it down, block the crosshead securely at the back end of the guides, disconnect the valve rod of the high-pressure valve, and place the valve in the center of its seat, so that it will block the ports, and clamp it there; place the handle of the operating valve in simple position, and proceed, using the low-pressure side only. With the operating valve in simple position, as recommended above, the intercepting and reducing valves will be moved to simple position by their springs, and the low-pressure side will be supplied, through the reducing valve, with live steam.

50. Broken Main Rod: Low-Pressure Side.—In case the main rod on the low-pressure side breaks, take it down and block the crosshead at the back end of the guides; disconnect the low-pressure valve stem, and clamp the valve in such a position that it will cover both ports; move the handle of the operating valve to simple position, and proceed, using only the high-pressure cylinder of the engine. Referring to Fig. 18, it will be seen that live steam will pass from chamber *G* to the high-pressure cylinder, and will exhaust through the emergency exhaust passage *c* directly to the atmosphere, without entering the receiver.

51. Broken Valve Stem.—In the event of either valve stem breaking, take down the main rod on that side, block the crosshead at the back end of the guides, clamp the valve in the center of its seat, and proceed, carrying the handle of the operating valve in simple position.

52. Failure of Intercepting or Reducing Valves. If either of these valves fail to operate properly, so that it is necessary to locate and remedy the trouble, take the head off the bushing of the valve causing the trouble, remove the valve, and ascertain and remedy if possible the cause of the improper operation of the valve.

53. Blows.—Blows that occur in the slide valves and piston packing of a Baldwin two-cylinder compound engine are located as in a single engine by working the compound engine in simple position. Steam is required in chambers v and Q to hold the reducing valve closed and the intercepting valve in compound position, as shown in Fig. 19. Any mishap that cuts off this steam supply will require the engine to be worked simple until repairs can be made.

Should the reducing valve K not make a tight joint in its bushing, it will allow live steam to flow into the receiver, thus increasing the pressure in the low-pressure cylinder, and an unequal amount of work will be done in the two cylinders.

RICHMOND COMPOUND.

DESCRIPTION.

54. General Arrangement.—Fig. 22 is a front view of the latest type of **Richmond compound engine,** showing the relative positions of the high-pressure cylinder A, low-pressure cylinder B, and intercepting-valve chamber C, together with the arrangement of the steam pipes D and E and the receiver YZ. The upper part of the receiver is broken away, in order that the steam pipes may be seen. It will be observed that the steam pipes are of unequal diameter. The one marked D is of the usual size, and connects directly with the steamway

(in the cylinder saddle) that leads to the high-pressure steam chest; its duty is to supply steam to this steam chest. The pipe *E* is much smaller, being only 3 inches in diameter, and connects with a special steamway that leads to a chamber surrounding the reducing valve. The exhaust passage from the high-pressure cylinder connects with the end *Y* of the receiver,

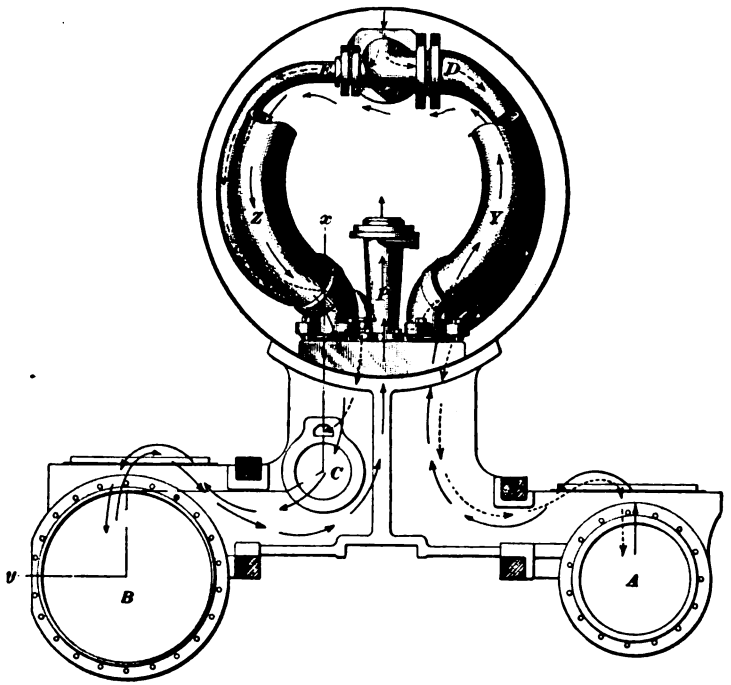

FIG. 22.

the other end *Z* of which connects with a special passage that leads to the intercepting-valve chamber *C*. Also, a passage (the steamway to the low-pressure cylinder) leads from the intercepting valve to the steam chest of the low-pressure cylinder, while the exhaust passage from this cylinder leads directly to the exhaust pipe *P*.

This will be seen more clearly be referring to Fig. 23, which is a sectional view taken through the exhaust passages. The steam pipe *D* connects with the steamway *G*; this steamway

divides into two branches, one of which connects with the back end, and the other (marked x) with the front end of the steam chest. The exhaust passage H leads to the receiver. On the low-pressure side, I is the chamber with which the end Z of the receiver connects, while K is the exhaust passage that leads to

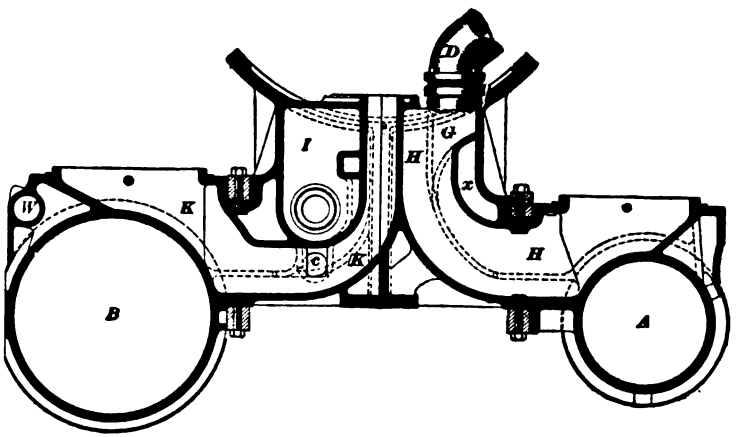

FIG. 23.

the exhaust pipe. The distribution of steam to the steam cylinders is effected by means of slide valves operating in the steam chests. W is the chamber in which the over-pass valves work.

55. Arrangement of Intercepting Valve, Etc.—A perspective view of the Richmond compound engine is given in Fig. 24, in which a part of the low-pressure cylinder and the left half of the saddle have been broken away (on the line xy, Fig. 22), in order to show the relative positions of the different valves and passages; also, the low-pressure steam chest has been removed. In the figure, M is the intercepting valve, by means of which the exhaust steam from the high-pressure cylinder is discharged either into the low-pressure cylinder when the engine is working compound, or directly to the exhaust pipe when it is working simple. The valve N is called the **emergency valve**, since, by its use, the engineer

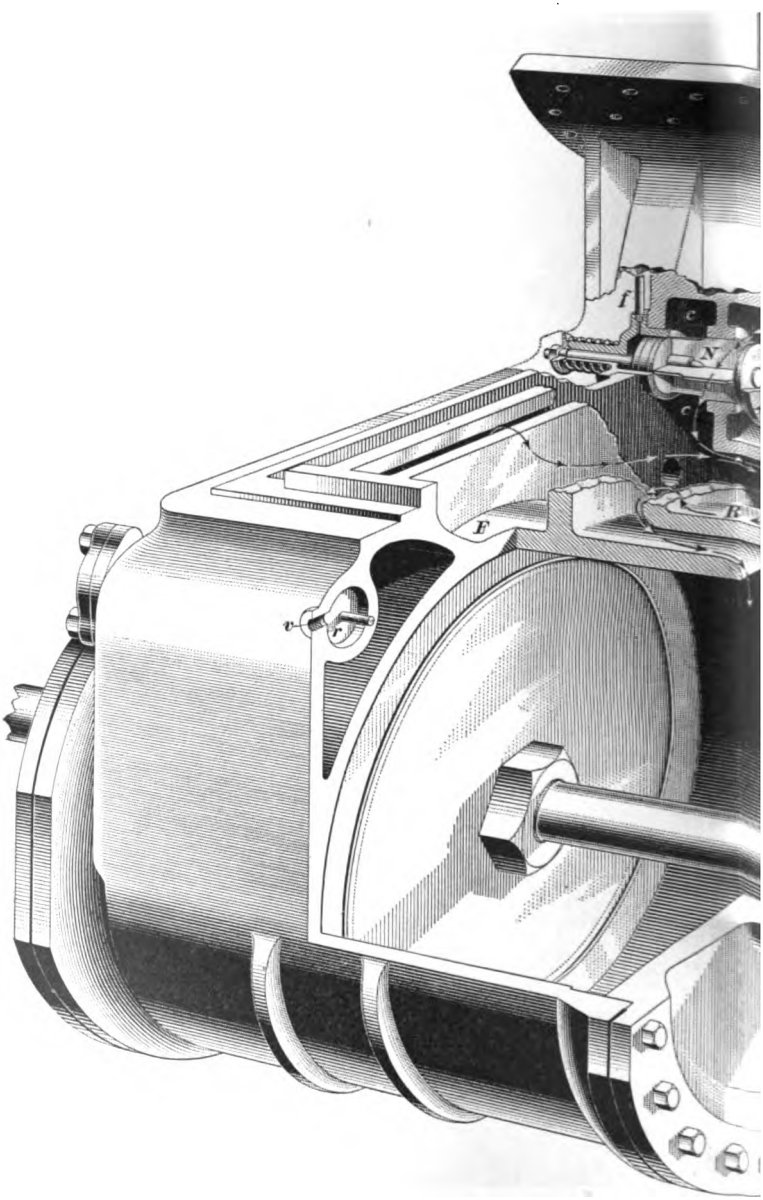

FIG. 3

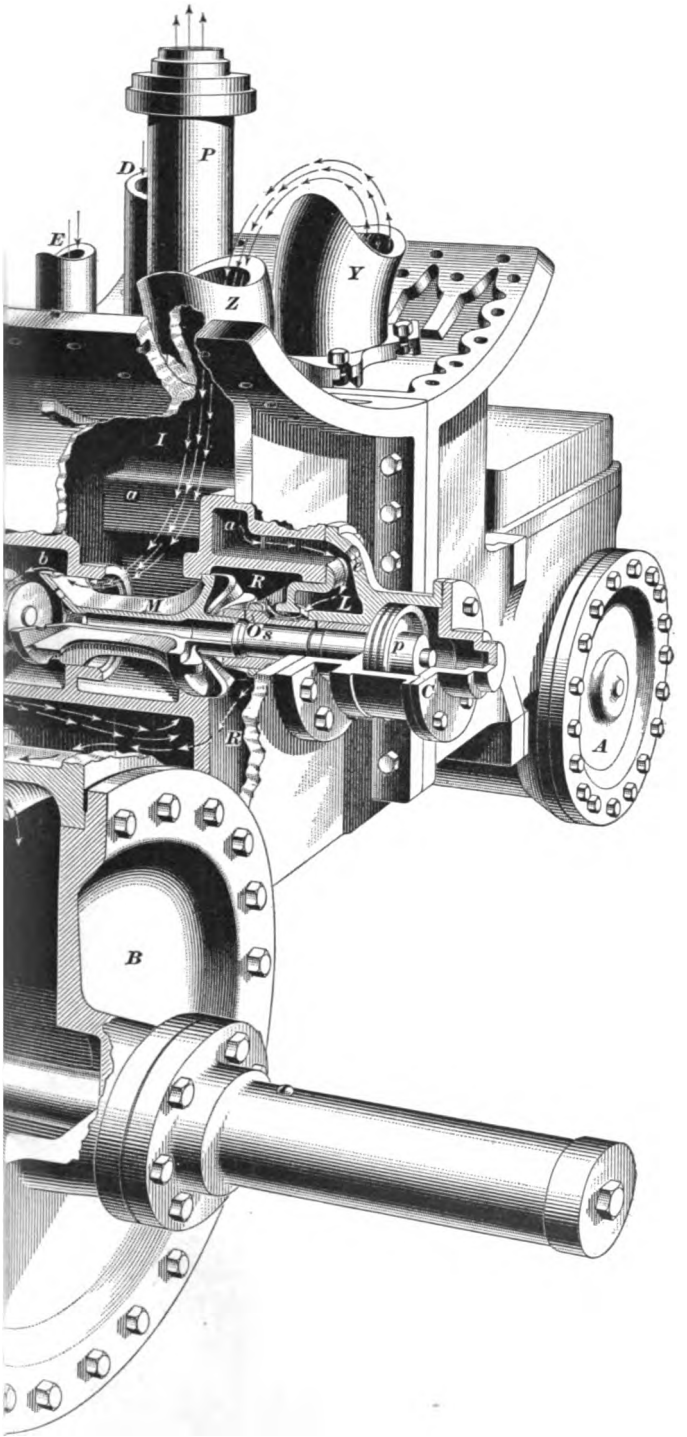

24.

can change the engine from compound to simple at will. This is accomplished, as will be explained further on, by causing the valve to open a special passageway *c* between chamber *I* and the regular exhaust passage *F*.

The reducing valve *O* is merely a cylindrical sleeve capable of sliding back and forth a distance of 1 inch on the stem *s* of the intercepting valve; its duty is to admit live steam at a reduced pressure into the low-pressure steam chest during the time the engine is working simple, and to regulate the pressure there to a certain percentage of that of the steam used in the high-pressure cylinder. The piston *p* on the valve stem *s* acts as an air **dashpot** for the intercepting valve, to prevent the valve slamming on its seat.

56. The chamber *I*, it will be observed, connects directly with the end *Z* of the receiver. The 3-inch steam pipe *E* connects with the passage *a* that ends in the chamber *L* surrounding the reducing valve. The passage *R* is the steamway that leads directly to the low-pressure steam chest; it is connected with chamber *L* through the reducing valve *O*, and with the chamber *I* through the intercepting valve *M*. A chamber *b* separates chamber *I* from the emergency exhaust passage *c*, and the exhaust passage leads directly to the regular exhaust passage *F*. The over-pass valves *r* are shown also, while an air-discharge valve is connected with the opening that is directly below the exhaust valve *N*. The different valves are shown in their simple positions—that is, in the positions they assume during the time that the locomotive is being worked as a simple engine. As will be seen by the arrows, the exhaust steam from the high-pressure cylinder passes from the end *Y* to the end *Z* of the receiver, and thence, through chambers *I* and *b*, exhaust valve *N*, and emergency exhaust passage *c*, to the main exhaust passage *F* and the atmosphere. At the same time, steam passes from the small steam pipe *E* through the passage *a* to chamber *L*, thence through the reducing valve *O* and passage *R* to the low-pressure steam chest, as indicated by the arrows. The exhaust steam from the low-pressure cylinder passes directly to the main exhaust passage *F*, as indicated.

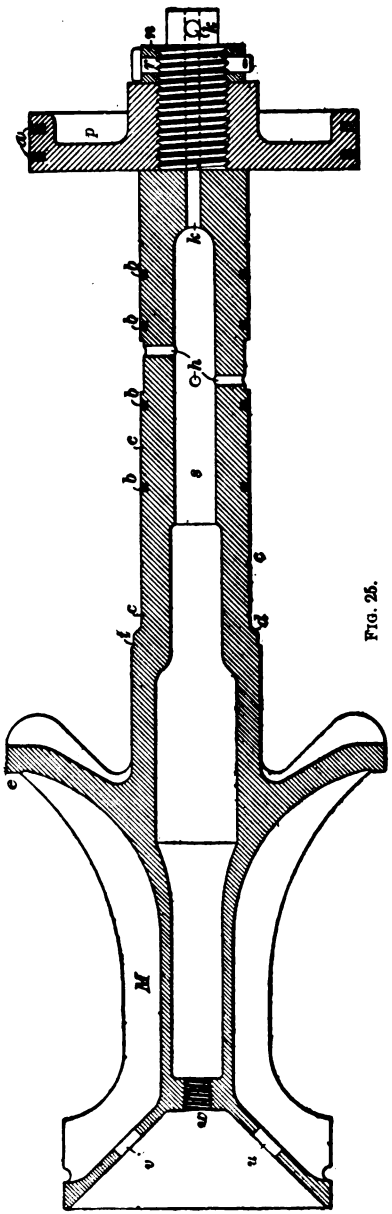

FIG. 25.

57. Details of Intercepting Valve. — This valve, sometimes called the *automatic starting valve*, is shown in section in Fig. 25. The piston *p* screws on to the valve stem *s*, and is held in position by the nut *n* and cotter pin *r*; also, the piston is fitted with two packing rings *a*. The valve stem *s* is fitted with four packing rings marked *b*, and water-packing grooves marked *c*. A shoulder *d* is beveled at an angle of 45°, and forms a steam-tight joint on the seat *c* on the inside of the valve *O*, Fig. 26. A groove *t* is cut in the shoulder *d*, the purpose of which will be seen later. The end *e* of the valve *M* is finished so as to make a steam-tight joint with its seat. It will be noticed, also, that two $\frac{3}{4}$-inch holes *u* and *v* are drilled through the small end of the valve, and a steel plug is screwed into the end at *w*. The object of the holes *u* and *v* is to insure receiver pressure in chamber *b*, to assist in balancing the valve *M*, during the time it is in compound position. The plug *w* is intended merely to

plug up the core hole to the inside of the casting. The leakage holes *h* are intended to prevent any steam pressure accumulating under the sleeve, where it would interfere with the proper operation of the valve. The steam leaks out through the holes to the bottom of the stem *s*, and thence through the passage *k* in the stem to the outer end of the dashpot, whence it escapes to the atmosphere through the hole *l* in the dashpot head. (See Fig. 27.)

58. Details of Reducing Valve.—The reducing valve *O* is shown in section in Fig. 26, in which the parts marked *4*, *5*, and *6* correspond to the parts similarly marked in Fig. 27. This valve, as has already been remarked, is in the form of a cylindrical sleeve, the inside diameter of which is just large enough to allow the sleeve to slip freely over the valve stem *s*. The sleeve is fitted with six packing rings and a water-packing groove *b*. The shoulder *c* is beveled at a 45° angle, and fits

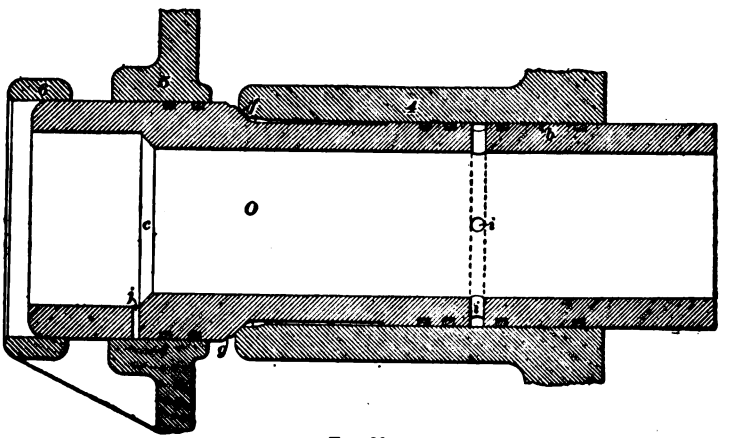

FIG. 26.

on and makes a steam-tight joint with the shoulder *d* of the valve stem *s*. A hole *j*, $\frac{1}{8}$ inch in diameter, is drilled through the sleeve in such a position that when the intercepting valve is closed and the reducing valve open, the hole is directly above the groove *t* in the valve stem, and steam from chamber *L*, Fig. 27, can then pass through *j* into groove *t*. A 45° beveled joint is also made at *f* with the piece *4*, and the shoulder *g* is

notched out as shown. The sleeve is about 1 inch shorter than the valve stem *s*, so that it can be moved back and forth on the stem that distance. The holes *i* are leakage holes, and serve the same purpose as the holes *h* of the stem.

59. Operation of Reducing Valve.—It will be remembered that the exhaust steam from the high-pressure cylinder discharges directly into the receiver; hence, when the intercepting valve *M* is closed, two or three exhausts will fill the receiver and chamber *I* with steam at the regular receiver pressure. It will readily be seen, also, that, after the throttle is closed, the low-pressure cylinder will quickly relieve the receiver and chamber *I* of all pressure by withdrawing the steam from them; hence, there will be no pressure in the receiver by the time the engine is to be started.

When the throttle is opened in starting the locomotive, steam flows from the boiler into the high-pressure steam chest through the steam pipe *D*, Fig. 24, and also into chamber *L* surrounding the reducing valve through the 3-inch pipe *E* and passage *a*. The steam in chamber *L* exerts a pressure on the shoulder *g* of the sleeve, tending to move the sleeve and intercepting valve into the simple position, as shown in Fig. 27; and, since there is no pressure in chamber *I* (the engine not having exhausted yet), the valves are forced into that position, thus closing the valve *M* and allowing live steam at a reduced pressure to flow into the passage *R* and the low-pressure steam chest, as indicated by the arrows. This live steam raises the pressure in chamber *R* until it is a little less than half that exerted by the live steam in chamber *L*; it then exerts sufficient force on the end *n* and surface *z* of the sleeve to overcome the force exerted on the shoulder *g*, and the sleeve, consequently, is moved forwards on the stem *s* until it closes the passageway between the chambers *L* and *R*, as shown in Fig. 28, and cuts off the supply of live steam from chamber *R*. A reduction of pressure in chamber *R* again causes the reducing valve to move into the position shown in Fig. 27. Thus, by opening and closing the passage between chambers *L* and *R*, as described, the reducing valve maintains a pressure in the chamber *R* that is about four-tenths that of the

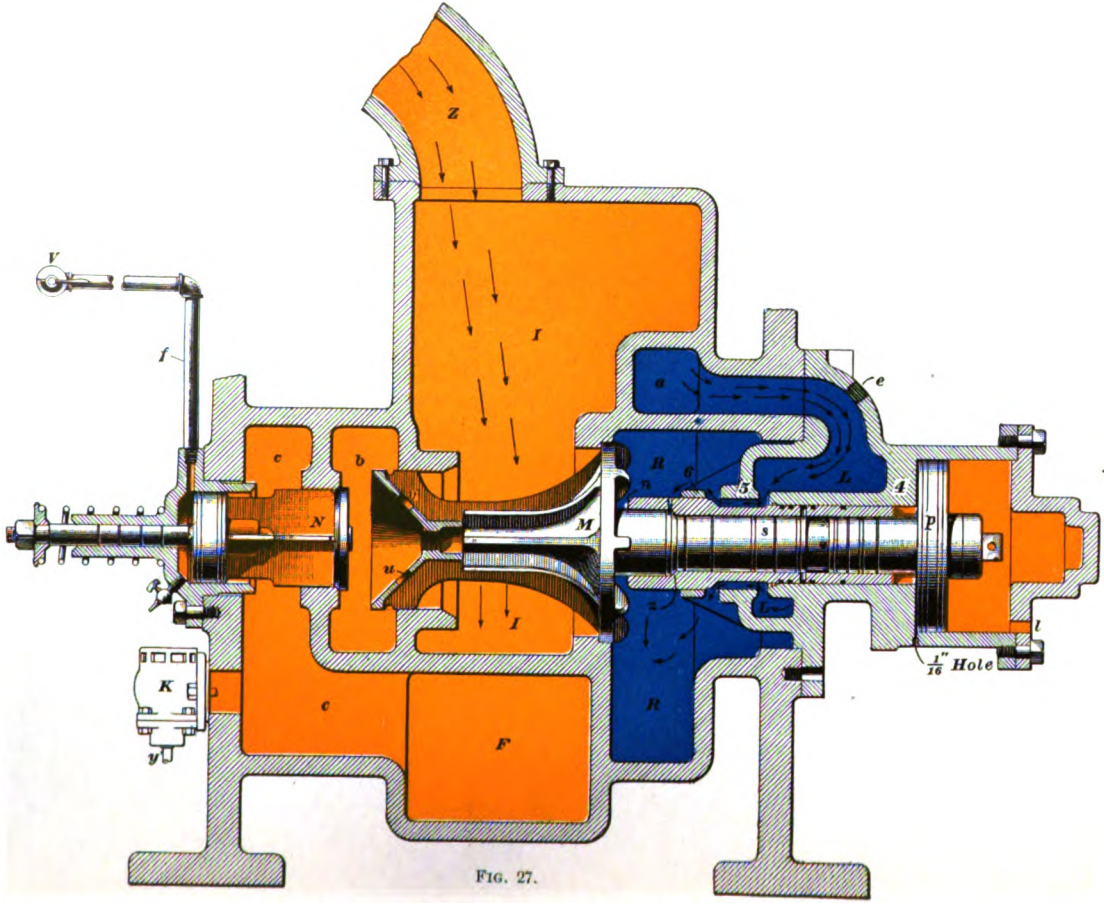

FIG. 27.

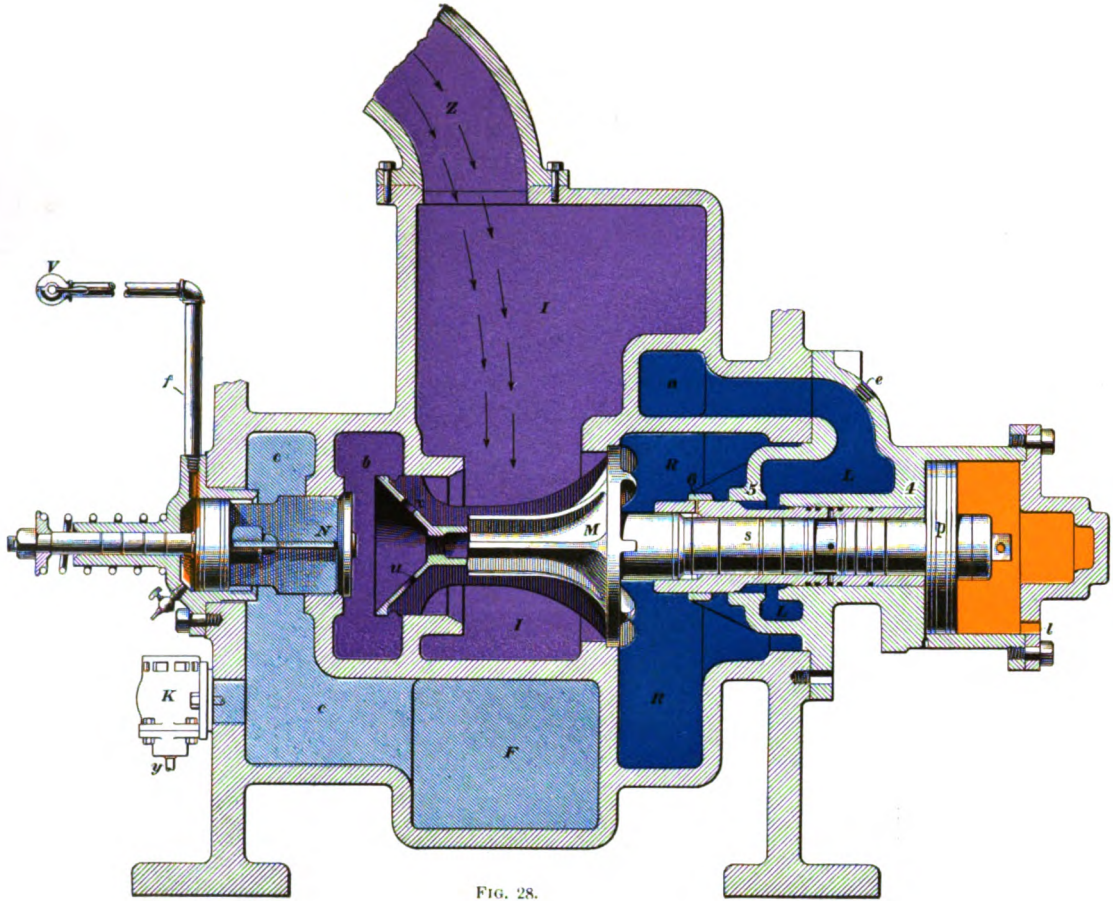

FIG. 28.

live steam in chamber L; hence, the pressure of the steam used in the low-pressure cylinder, when the engine is working simple, is about four-tenths that used in the high-pressure cylinder, this ratio of pressure being maintained in order to make the total force exerted on the high-pressure and low-pressure pistons equal, the area of the latter piston being made two and one-half times the area of the former.

OPERATION.

60. As a Compound Locomotive.—Assume that the locomotive is to be started as a compound engine. When the throttle is opened, steam flows into the high-pressure steam chest, and thence into one end of the high-pressure cylinder; at the same time steam flows into chamber L, opens the reducing valve, and closes the intercepting valve, and then passes on to the low-pressure steam chest and cylinder. Therefore, in starting compound, both the high-pressure and the low-pressure cylinders, for a few seconds, receive steam directly from the boiler; the live steam for the low-pressure cylinder, however, is reduced by the reducing valve to the required pressure. As the locomotive moves forwards, the high-pressure cylinder exhausts into the receiver at every revolution of the drivers, and, since the intercepting valve is closed, the exhaust steam accumulates and raises the pressure in the receiver, until, after three or four exhausts, the pressure has increased sufficiently to force the intercepting and the reducing valves forwards to their compound positions, as shown in Fig. 29. Closing the reducing valve cuts off the live steam from the low-pressure cylinder, and this cylinder is then supplied with exhaust steam from the receiver, the steam passing through the intercepting valve to the low-pressure steam chest. It will thus be seen that, when starting the locomotive in compound position, it works as a simple engine for two or three revolutions, and then automatically changes to compound.

From the foregoing, it will be seen that the valves are wholly automatic in their action during the time the engine is working compound; that is, in starting the locomotive, the reducing

valve opens and the intercepting valve closes automatically, and they remain thus until the exhaust steam from the high-pressure cylinder raises the pressure in the receiver to the required amount, whereupon the intercepting valve opens and the reducing valve closes automatically. The valves are then in their compound positions, and they remain there as long as the engine is working compound. The intercepting valve is automatically closed by the pressure of the steam on the shoulder *g* of the reducing valve, as already explained. The reason it opens automatically is as follows: The front end of the valve is larger than the back end; besides this, the pressure on the small end is balanced; hence, the valve is unbalanced, and any pressure in the receiver will give it a tendency to open. As the pressure in the receiver increases, this tendency increases, until, finally, it is great enough to move the valve forwards, thus opening it.

61. As a Simple Locomotive.—It may be necessary in starting a very heavy train, or in order to avoid stalling on a grade, to work the engine simple for a time until the train is fairly under way or the danger of stalling is past, after which it should be changed to compound. To do this, however, it is necessary that the engineer be provided with some means by which he can convert the engine from compound to simple and back again at will. In the Richmond compound this is provided for as follows: The chamber *x*, Fig. 30, back of the emergency valve *N*, is connected by means of a pipe *f* with an operating valve *V* situated conveniently in the cab. When the engineer wishes to work the engine simple, he turns the handle of the valve *V* to the position marked *simple*; this admits steam through the pipe *f* to the space *x* back of the valve *N*, and forces the valve forwards, thus opening it.

When the valve *N* is closed, the pressure in chamber *b* is maintained equal to that in chamber *I* through the two $\frac{3}{4}$-inch holes *u* and *v*; hence, while the exhaust valve *N* is closed, the pressure on the small end of the intercepting valve *M* is balanced. When the valve *N* is opened, however, the pressure in chamber *b* escapes through the valve *N* and the passage *c* into

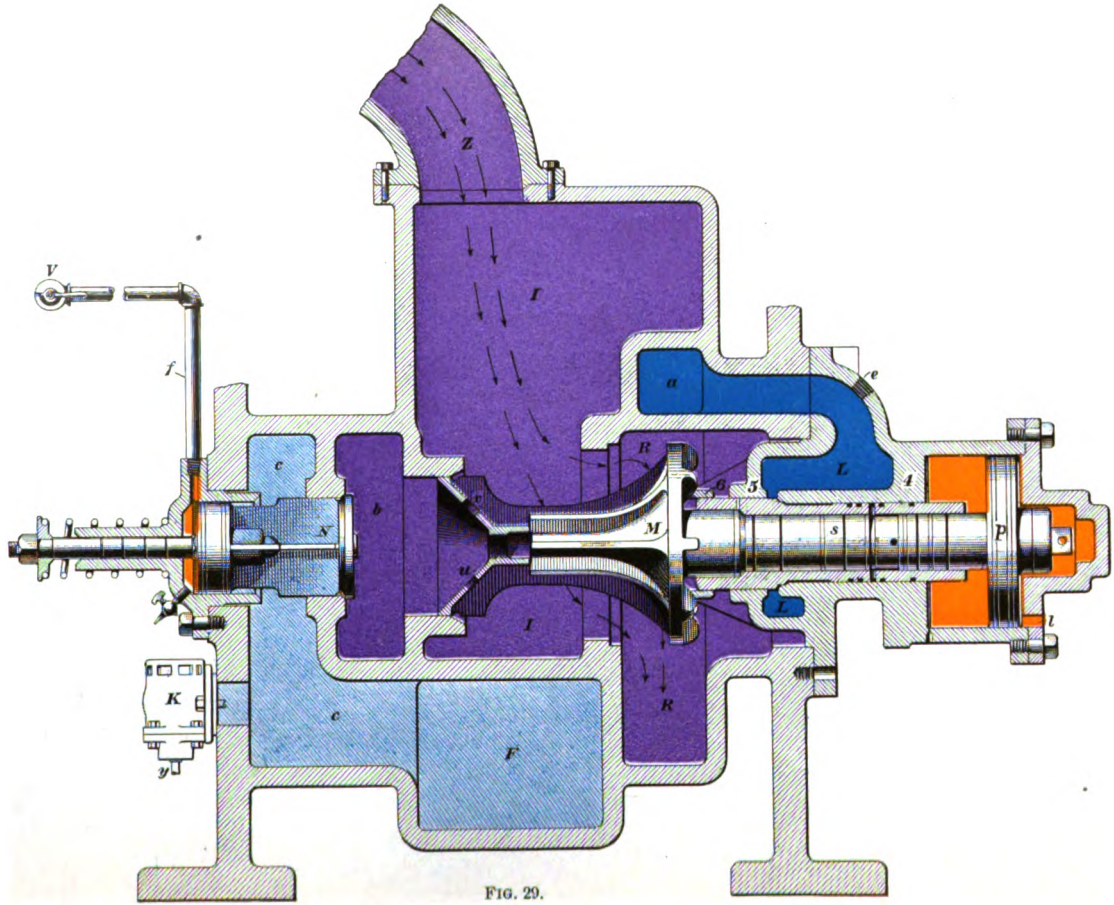

FIG. 29.

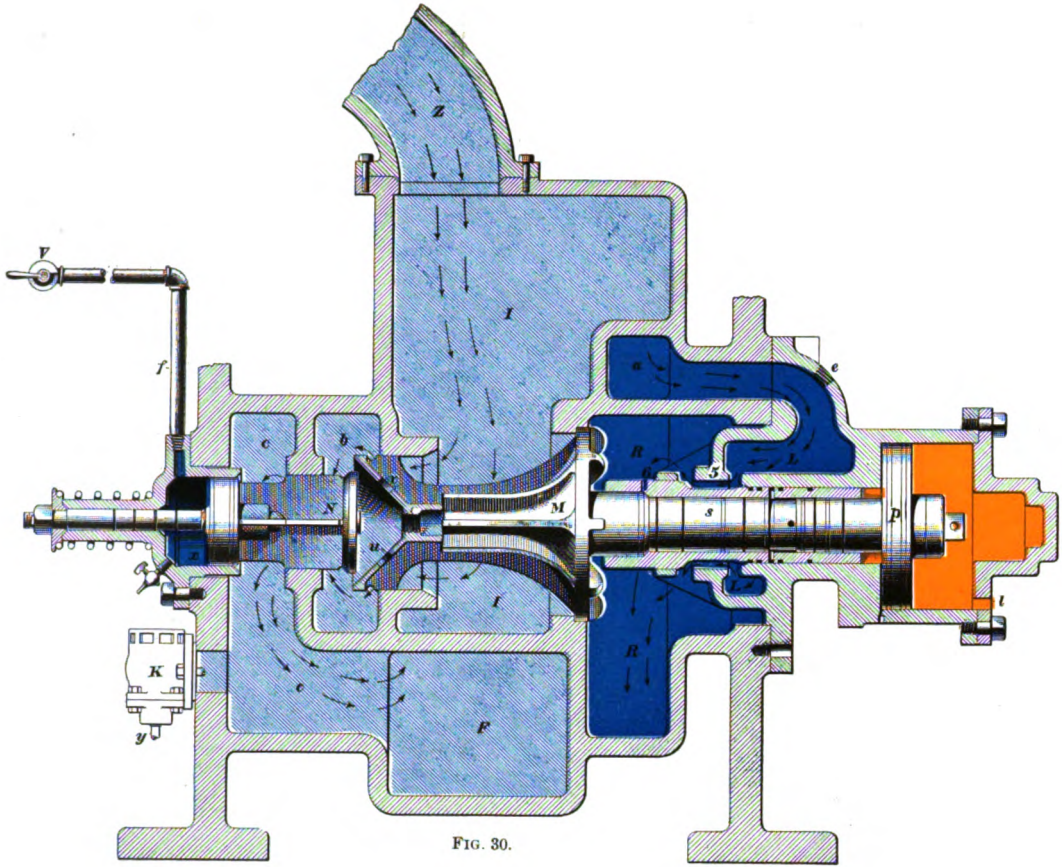

FIG. 30.

the main exhaust passage *F*, thus removing, practically, all the pressure from that face of the intercepting valve *M* that is in chamber *b*. The combined pressures of the steam in chamber *I* on the small end of the valve *M*, together with that of the steam in chamber *L* on the shoulder *g*, Fig. 26, of the sleeve, is then great enough to overcome the pressure of the steam in chamber *I* on the large end of the valve *M*; consequently, if the valves are not already in their simple positions, they will be moved there. When the valves have assumed their simple position, Fig. 30, live steam passes through the reducing valve and passage *R* into the low-pressure steam chest, while the exhaust steam from the high-pressure cylinder flows directly into the atmosphere through the receiver, emergency valve *N*, emergency exhaust port *c*, the main exhaust passage *F*, and the exhaust pipe, as indicated by the arrows. As long as the handle of the operating valve is left in the position marked *simple*, the engine will work as a simple engine; but, when it is turned to the position marked *compound*, the pressure in pipe *f* and chamber *x* is removed, and the pressure of the exhaust steam against the back head of the valve *N*, together with the action of the spring, causes the valve *N* to close. This closes the only outlet from the receiver; hence, the exhaust steam from the high-pressure cylinder raises the pressure in the receiver until it is sufficient to open the intercepting valve, and thus automatically converts the engine into a compound.

OPERATING AND PROTECTIVE DEVICES.

62. Operating Valve.—In Fig. 31 is given a sectional view of the **emergency operating valve** used in connection with the Richmond compound. The connection *X* is screwed into the steam turret; the pipe *f*, Fig. 30, that leads to the emergency valve, connects at *Y*, while a pipe connected to *Z* leads to the atmosphere. The valve *V* is a double-seated valve, operated by means of the handle *H*, and is moved from one of its seats to the other by a half turn of the handle. The operating valve is usually so placed on the turret that the engine is working compound when the handle points to

the front, and is working simple when the handle points to the rear. The tapped hole *O* (¼-inch pipe) is for a small oil cup.

The valve operates as follows: When the handle points to the front, as in the figure, the valve *V* is in the position shown, in which position the chamber *x* and pipe *f*, Fig. 30, are open to the atmosphere through the opening of the valve *V* and the connection *Z*. This is the compound position of the operating valve. When the handle is moved so as to point to the rear, the valve *V* is raised to its upper seat, thus closing the valve opening to connection *Z*, and opening that to connection *X*. Steam can now flow from the boiler through *X*, past valve *V*, out at *Y* into the pipe *f*, and so into the chamber *x*, back of the emergency valve *N*, thus opening the valve and causing the engine to work simple.

63. Over-Pass Valves.—Considerable trouble has been experienced with compound locomotives on account of the action they have on the fire when drifting down grade with steam shut off. While this trouble is present to a small extent in engines having small cylinders, it is especially noticeable in compounds in which the large low-pressure cylinder is connected directly with the exhaust. When drifting, the air drawn into the cylinders through the relief valves is compressed by the pistons, which act as air compressors, and thumping and rough riding of the engine result; also, the cylinders are cooled considerably by the air drawn in, and, after being compressed, the air is discharged through the stack and creates a draft that causes the fire to burn more than is desirable. The *over-pass valves* of the Richmond compound were designed with the object of preventing the above-mentioned evils. As will be seen at *W*, Fig. 24, they are placed together within a special chamber made in the cylinder casting, just below the steam chest,

Sectional views of the over-pass valves are given in Fig. 32 (*a*) and (*b*), in which (*a*) shows the position of the valves when steam is being used, and (*b*) shows the position of the valves when the locomotive is drifting with steam shut off. Fig. 32 is not a strictly accurate section of the parts and passages shown, but is so constructed as to show in effect just what

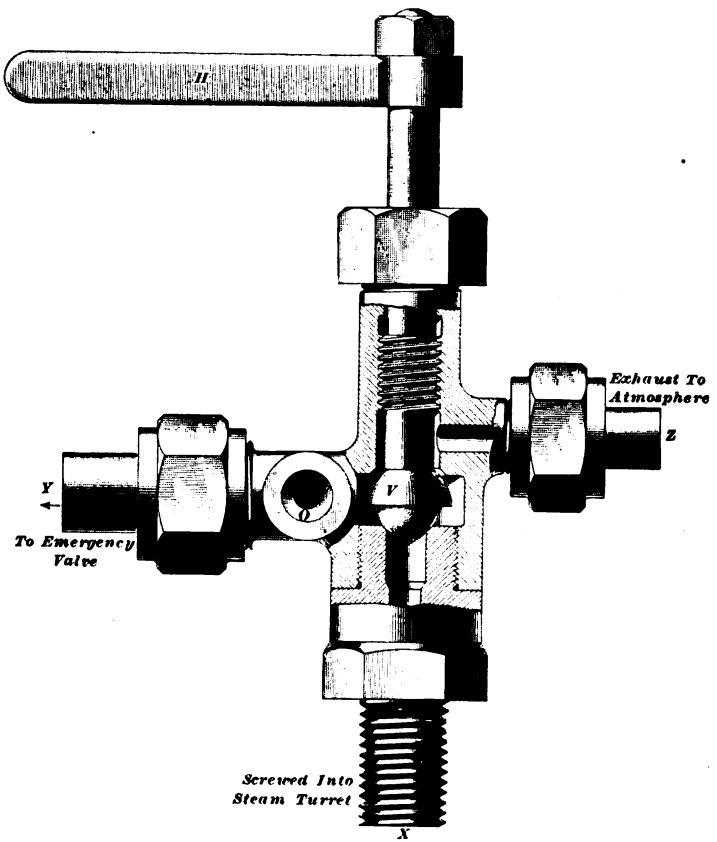
H
Exhaust To
Atmosphere
Z
Y
V
To Emergency
Valve
Screwed Into
Steam Turret
X

FIG. 31.

the connections are. Referring to the figure, *a* and *b* represent the two steam passages that lead from the slide-valve seat to the two ends of the low-pressure cylinder, *c* represents the chamber connecting with the exhaust passage *F*, Fig. 30, while *d* and *e* are the passages connecting with the supply ports in the steam chest. The space *S* between the valves *X* and *Y* is connected with the steam passages *a* and *b* by the ports *f* and *g*, respectively. The spaces *U* and *V* are connected with the passages *d* and *e* by means of the ports *h* and *i*, respectively. The edge of the inner faces of the valves *X* and *Y* are beveled so as to

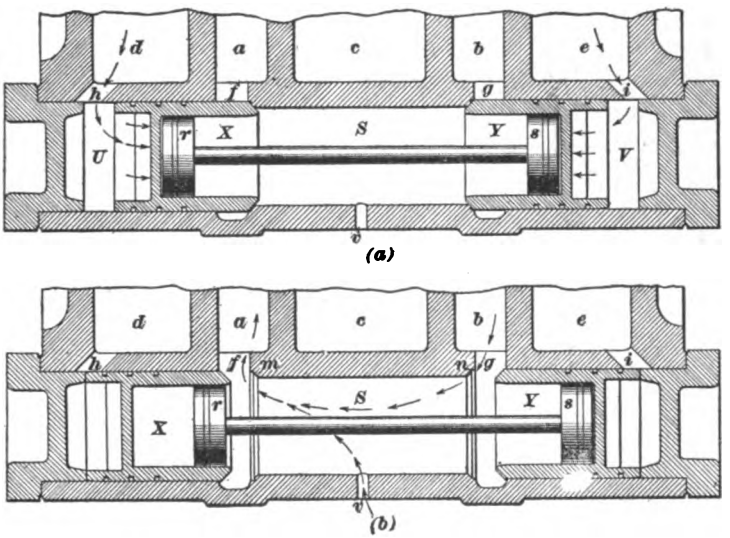

FIG. 32.

make a steam joint with the seats *m* and *n*. The two pistons *r* and *s* are necessary to cushion the movements of the valves *U* and *V* and prevent slamming, for these valves (sometimes made 5 inches in diameter) have a rapid motion. The operation of the valves is as follows: As long as the throttle is open, the passages *d* and *e*, and, consequently, the chambers *U* and *V*, are filled with steam and the over-pass valves are held closed, as shown in view (*a*); when the throttle is closed, however, and the locomotive is allowed to drift, a vacuum forms in the steam chest. This causes a vacuum to form in chambers *U*

and V, and the valves X and Y are forced apart into the positions shown in view (b). This opens a passage from one end of the cylinder to the other, so that the air that is being compressed ahead of the piston is free to flow into the other end of the cylinder, as shown by the arrows, thus preventing, to a considerable extent, the formation of a vacuum there. The space S between the valves is connected to the atmosphere through the small vent v, as it was found advisable to admit

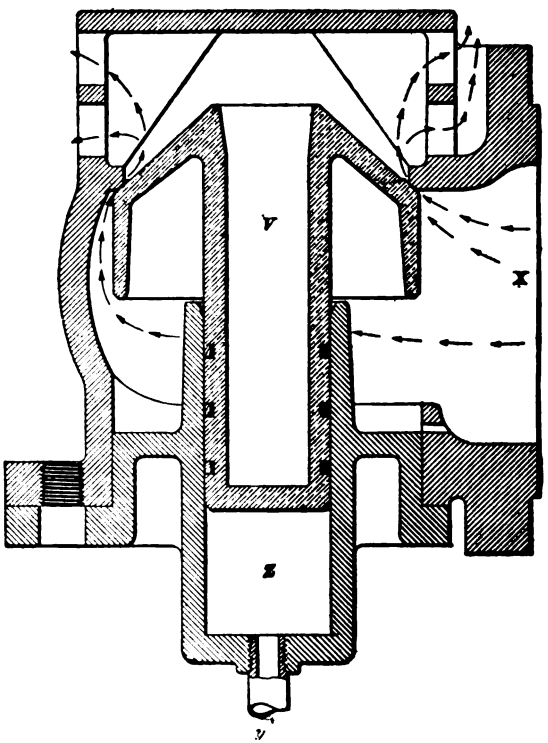

FIG. 33.

some external air in order to prevent the cylinder from becoming overheated by the heat generated in churning the air back and forth in the cylinder. Also, the vent helps to prevent a vacuum from being formed. The over-pass valves are only applied to the low-pressure cylinder.

64. Automatic Air-Discharge Valve.—A sectional view of the air-discharge valve *K* (see Fig. 27) is shown in Fig. 33. As will be seen, the stem on the valve *V* is provided with three packing rings to make it steam-tight. The pipe *y* connects with the live-steam passage that leads to the low-pressure steam chest, so that there is direct connection between that steam chest and chamber *Z*. The chamber *X* is in direct connection with the exhaust passage *c*, Fig. 30. The action of the valve is as follows: Chamber *Z* is filled with steam as long as the throttle is opened, and the steam exerts a pressure on the end of the valve stem that holds the valve *V* up against its seat, as shown. When the throttle is closed, however, the valve drops down and a direct opening is made between the exhaust passage *c* and the atmosphere, as indicated by the arrows. Thus, when the locomotive is drifting, air can pass either from or to the low-pressure cylinder through the air-discharge valve without passing through the exhaust pipe, and the result is that the action on the fire, caused by the discharge of air from the cylinder through the exhaust pipe, is very much modified, while sparks and hot gases are prevented from being drawn into the cylinder.

OPERATING.

65. Starting a Train.—Under ordinary conditions, a Richmond compound will start a train of moderate weight with the operating valve in the compound position, so to start such a train, place the reverse lever in the corner, turn the handle of the operating valve so that it points towards the front end (compound position), open the cylinder cocks, and, last of all, open the throttle; gradually hook up the reverse lever as the speed of the train increases, until it is in the proper running notch.

In starting on grades or in starting a heavy train, the engine should be worked simple until it has the train moving freely, when it should be worked compound. In other words, to start on a heavy grade or to start a heavy train, place the reverse lever in the corner, open the cylinder cocks, move the handle

of the operating valve to simple position (pointing to the rear), and then open the throttle. As soon as the train is moving freely, and it is possible to work the engine compound, do so, hooking up the reverse lever as the speed of the train warrants, until it is in the proper position.

66. Use of Operating Valve.—The engine should be worked simple only when it is absolutely necessary, as in the cases just cited, or when in danger of stalling, and it should be converted to compound again as soon as practicable, since the economy of the locomotive is very much reduced when working simple, and, besides, the exhaust has a very severe action on the fire at such times. It should be remembered that the reverse lever must first be placed in the corner before the operating valve is moved to simple position, and that the lever must remain in the corner as long as the operating valve remains in simple position, the handle of the operating valve always being moved to compound position before the reverse lever is hooked up. Also, the operating valve should only be used at speeds of less than 8 miles per hour.

67. Reverse Lever and Throttle.—When using the reverse lever, it must be remembered that the best position of the lever for a compound is somewhere between that of half cut-off and the corner, the exact notch depending, of course, on the controlling conditions, such as the load, grade, speed, etc. It must be remembered, also, that the train should be handled by means of the reverse lever rather than by the throttle; when working compound, the lever can be dropped much lower without tearing the fire, and this should be taken advantage of when necessary. The throttle should be carried as wide open as possible under the circumstances, and the engineer should use good judgment in this respect. Under some conditions it may be found advantageous and more economical to close the throttle slightly and to drop the reverse lever a notch, rather than to run with the throttle wide open; but it should be borne in mind that the best economy will result if the throttle is always carried as wide open as the controlling conditions will permit. It is important, also, that the cylinder cocks should

always be open when starting, as, at first, condensation is very rapid, especially in the high-pressure cylinder, and the resulting water greatly increases the danger of knocking out a cylinder head, should slipping occur.

68. Drifting.—It is very important that the reverse lever of an engine be carried near the corner when drifting with the throttle closed, and this should not be overlooked. The over-pass valves of the Richmond type are of great service when drifting, and they should receive sufficient attention to keep them in good working order. Failure of the over-pass valves to operate will be manifested by a blow through the vent *v* in the over-pass valve casing, Fig. 32, when working steam, and by a disagreeable thumping when the engine is drifting with throttle closed.

69. Oiling the Cylinders and Valves.—One of the two cylinder feeds of the lubricator is connected to the high-pressure steam chest in the usual manner, but the oil pipe from the other feed, instead of leading to the low-pressure steam chest, is connected at *e*, Fig. 27, to the live-steam passage *a* that leads to chamber *L*. When the locomotive is working compound, therefore, and the reducing valve is closed, it is impossible for oil to pass from the oil pipe at *c* to the low-pressure cylinder; hence, lubrication of the cylinders at such times is accomplished by means of the high-pressure feed only, and the other feed is stopped, as any oil delivered by it would only be wasted. The feed to the high-pressure steam chest should be set to feed from 6 to 10 drops per minute while running under ordinary conditions, the feed being increased when the steam is wet and during such times as the locomotive is being forced.

70. When starting *simple*, allow several drops of oil to pass through the feed to the low-pressure side, so as to lubricate the intercepting valve, but shut off immediately when the engine is converted to compound. When starting compound, allow about 6 drops to feed to the low-pressure side. During such times as it is necessary to run the locomotive simple, reduce the feed to the high-pressure cylinder, and start the feed on the low-pressure side; the oil for the low-pressure side can

then pass with the steam through the reducing valve into the low-pressure cylinder. Feeding oil into the intercepting valve is to be avoided as much as possible, since it has a tendency to gum up the small packing rings. The small oil cup that is screwed into the connection *O* of the operating valve, Fig. 31, should be filled with cylinder oil, and one cupful will provide the exhaust valve *N* with sufficient lubrication for two days, provided the oil is properly used.

BREAKDOWNS.

71. Broken Main Rod: High-Pressure Side.—In the event of a main rod breaking on the high-pressure side, take it down, disconnect the valve rod of that side and clamp it in the center of its seat, move the piston to the back end of the cylinder, and securely block the crosshead so as to hold it there; then move the handle of the operating valve to the simple position, and run in with the low-pressure side. The low-pressure cylinder will receive live steam, at a reduced pressure, through the reducing valve, and hence will act as a simple engine.

72. Broken Main Rod: Low-Pressure Side.—If the broken rod is on the low-pressure side, take it down, disconnect the valve rod and clamp it in the center of its seat, block the crosshead so that the piston will be in the back end of the cylinder, move the operating valve to the simple position, and run in with the high-pressure side. The exhaust steam from the high-pressure cylinder will escape directly to the atmosphere through the emergency exhaust passage *c*, and, while steam can enter the low-pressure steam chest through the reducing valve, it can go no farther.

73. Broken Valve Stem.—In the event of a valve stem breaking, proceed exactly as if the main rod on that side had been broken.

74. Blows.—In the Richmond compound, blows in the slide valves and piston packing are located the same as in simple engines, by operating the compound as a simple engine. If the reducing valve does not make a tight joint with the fitting *5*, Fig. 29, live steam from chamber *L* will find its way into the

low-pressure cylinder, causing a greater amount of work to be done by that side of engine than was intended, with a consequent strain of parts and loss of steam when working compound. In running along where a very light throttle is required, the exhausting steam from the high-pressure side may not have sufficient pressure to hold the intercepting valve in the compound position, so that the reducing valve will operate and allow some live steam to get into the low-pressure cylinder; when this occurs, the engine burns a great deal of coal and uses too much water. Should the emergency valve *N* not make a tight joint on its seat, the result will be that a portion of the receiver steam, which finds its way through the holes *a* and *r*, will pass by the leaky valve *N* and cause a blow at the stack between exhausts when the engine is working compound.

If the vent hole *l* in the dashpot head becomes stopped up, or the packing rings on the reducing valve leak so badly that this opening *l* cannot allow the steam to escape, the intercepting valve cannot move to the simple position even when the emergency valve is open, and it is sometimes necessary to take off the cap and push the intercepting valve to the simple position.

In case a low-pressure steam chest is broken, or in the event of any mishap that necessitates the placing of a gasket in the joint of the small steam pipe *E*, in order to get the engine in on one side, the intercepting valve should be removed and the reducing valve forced over against the dashpot head and secured there, after which replace the intercepting valve, disconnect properly, as in the case of a simple engine, and with the operating valve in simple position, run in with one side.

In the event of the pipe *f* being broken so that pressure cannot be admitted to chamber *x*, Fig. 30, the emergency valve may be opened, to cause the engine to work simple, by removing the spring on the spindle, pushing the valve in by means of the rod, and fastening it there. If the large head of the valve *M* does not make a tight joint on its seat when working simple, steam will leak by to the high-pressure exhaust and will cause a poor showing in economy in coal and water.

Sometimes the reducing valve becomes stuck on the stem of the intercepting valve in such a way that it will not operate to

allow live steam to flow from chamber *L* to chamber *R* in working simple, or it may be stuck in its other position so as to allow steam at boiler pressure to go into the low-pressure cylinder. To remedy this, the stem *s* should be cleaned and lubricated.

SCHENECTADY COMPOUND.

DESCRIPTION.

75. General Arrangement.—The general arrangement of the high-pressure cylinder *A*, low-pressure cylinder *B*,

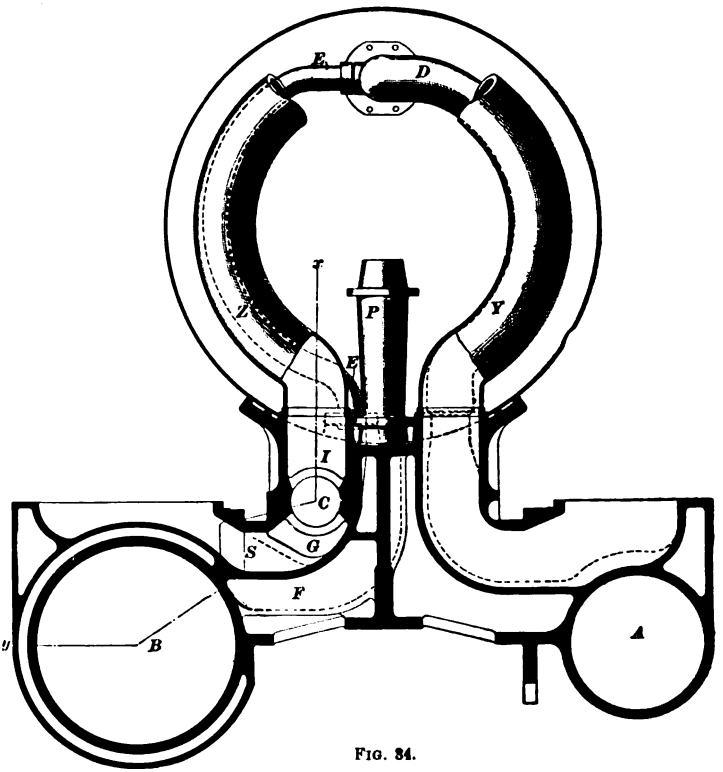

FIG. 34.

intercepting-valve chamber *C*, the arrangement of the steam pipes *D* and *E*, and the receiver *YZ* in the latest type of **Schenectady compound** are shown in Fig. 34. The upper

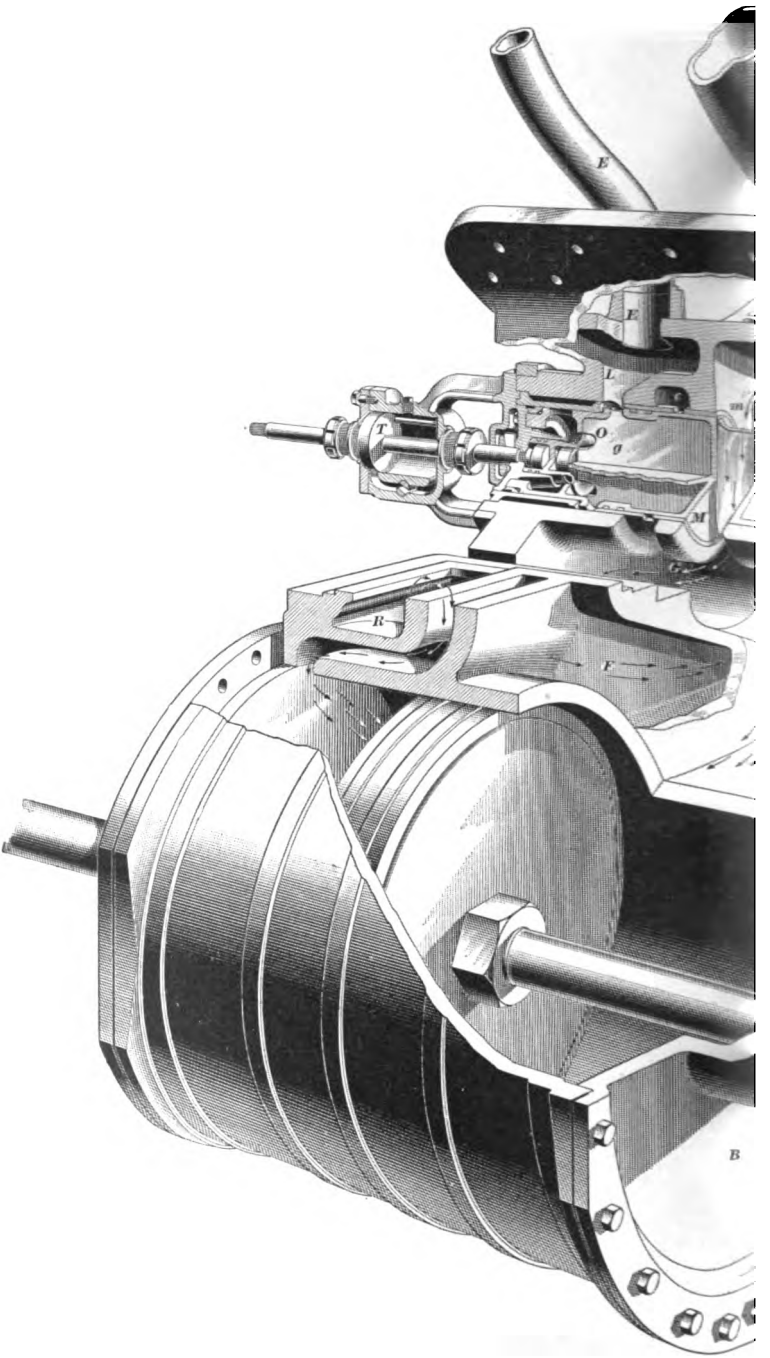

FIG. 35.

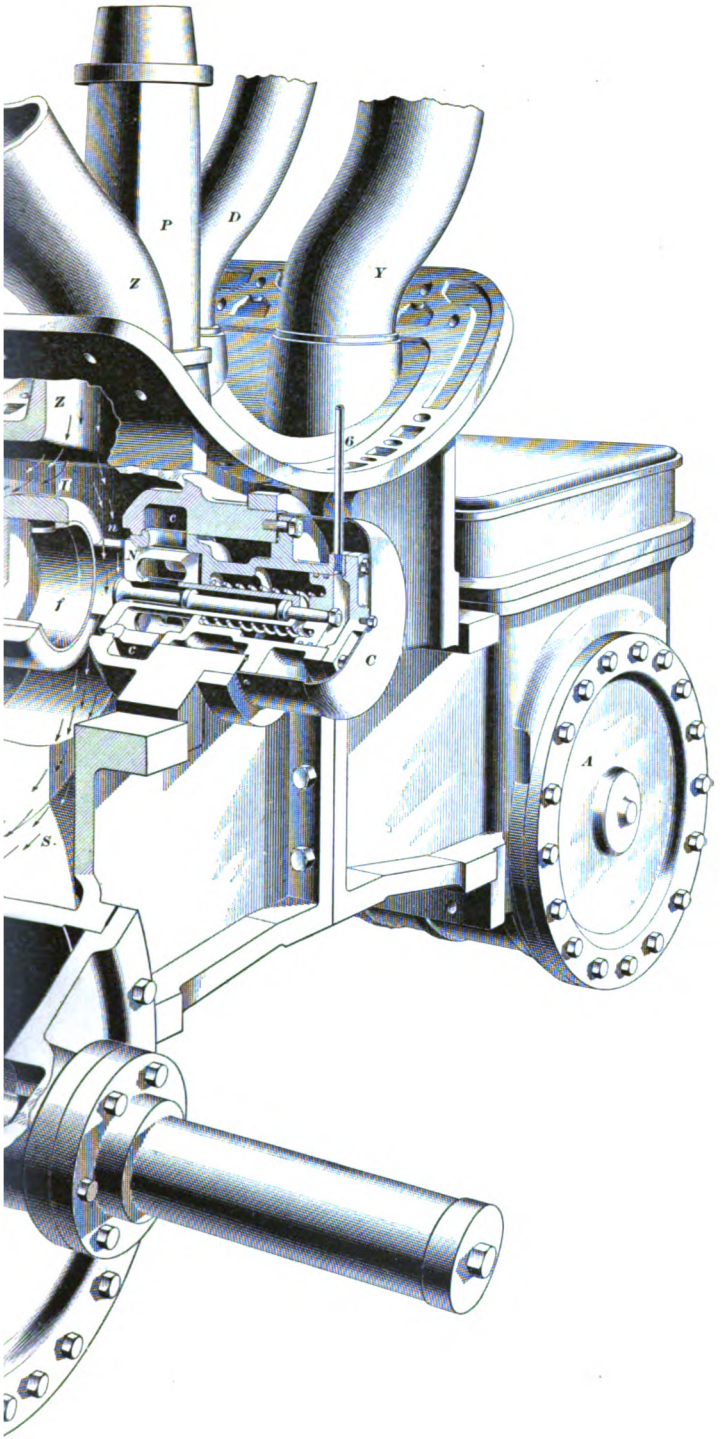
P
D
Z
Y
Z
G
H
e
n
N
f
c
C
A
S.

part of the receiver has been broken away, to show more clearly the arrangement of the steam pipes, while the lower part of the figure presents a sectional view of the saddle and cylinders with the steam-chest covers removed. It will be observed that the exhaust passage from the high-pressure cylinder *A* connects directly with the end *Y* of the receiver, the end *Z* of which leads to the chamber *I* surrounding the upper side of the intercepting valve. Also, it will be noticed that a chamber *G* surrounds the lower side of the intercepting valve, and connects the two ends of the low-pressure steam chest by means of a divided passage—the front branch *S* of which is shown. The exhaust passage *F* from the low-pressure cylinder leads directly to the exhaust pipe *P*. The distribution of steam to the cylinders is effected by means of slide valves in the steam chests.

76. Arrangement of Valves and Passages.—The arrangement of the several valves of the Schenectady compound is shown in perspective in Fig. 35, part of the low-pressure cylinder and the left half of the saddle having been broken away (on the line *x y*, Fig. 34), in order to show the relative positions of the valves and passages. In the figure, *M* is the intercepting valve that controls the passages *m* and *n* leading from chamber *I* to chamber *G*. The valve *N* is the emergency exhaust valve that controls the opening from chamber *I* to the emergency exhaust passage *c*. The reducing valve *O* admits live steam at a reduced pressure into chamber *G*, and regulates the pressure there to the required amount during the time that the engine is working simple.

The smaller steam pipe *E* leads into a chamber *L*, which ends in another chamber that entirely surrounds one end of the intercepting-valve bushing. The chamber *e* also surrounds the intercepting-valve bushing and opens into chamber *G* on the bottom side. The chamber *c* entirely surrounds the bushing of valve *N*, and connects with the emergency exhaust passageway that leads directly into the exhaust passage *F*. The chamber *G*, as has already been stated, divides into two passages *R* and *S*, the former of which leads to the back end, and the latter to the front end, of the low-pressure steam chest.

The exhaust passage *F* passes below chamber *G* and behind chamber *I*, and leads into the exhaust pipe *P*. The small pipe *6* leads to the operating valve in the cab.

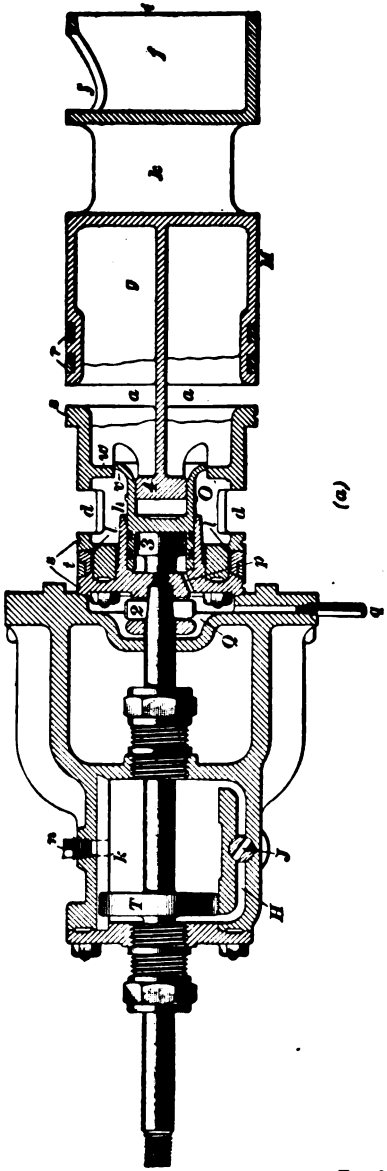

(a)

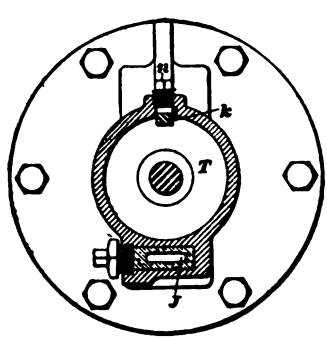

(b)

FIG. 36.

77. Intercepting Valve. From the sectional view given in Fig. 36 (*a*), it will be seen that the intercepting valve consists of three parts, marked *f*, *g*, and *h*. The end *i* of part *f* is carefully finished, also a hole *j* is cut in the top of *f*, and the parts *f* and *g* are connected by a rib *k* ¼ inch thick. The second part is cylindrical also, and forms a chamber *g* into which the ports marked *a* open. Two ribs, at right angles to each other, divide chamber *g* into four compartments, and each compartment is provided with a port, the ribs being broken away in the figure to show

the ports. There is a circular opening *v* in the end *w* through which the reducing valve *O* works. The third part of the intercepting valve forms a cylindrical chamber *h* having a number of ports marked *d* leading into it; also, it is connected with chamber *g* through the opening *v*. The second part *g* is fitted with two snap packing rings *r*, and a water-packing groove *s*, while the port *h* has water-packing grooves *s* and a packing ring *t*. Small holes *l* permit steam to flow from chamber *h* back of the ring *t*, and thus press it firmly against the valve bushing during the time chamber *h* is filled with steam. Also, a small hole *p* connects chamber *Q* with the space back of the reducing valve *O*, while chamber *Q* is connected with the atmosphere through the drip pipe *q*. A piston *T*, the rod of which is keyed to the intercepting valve, as shown, operates in a cylinder filled with oil, and forms an oil dashpot that prevents the intercepting valve slamming. As the piston *T* moves in either direction, it compresses the oil ahead of it, and thus forces the oil through the passage *H* and the plug valve *J* into the other end of the cylinder. The rapidity with which the piston will move depends on how fast the oil can pass through the valve *J*; and the object of valve *J*, therefore, is to provide a means of regulating the movement of the piston *T*, and hence of the intercepting valve *M*. If the valve *J* is wide open, the movement of the intercepting valve will be too rapid, and the valve will slam on its seat; by turning the valve *J* gradually in the direction to close it, the movement of the intercepting valve will become slower and slower, and will entirely cease when the valve is fully closed. To allow the intercepting valve to move faster, therefore, the valve *J* should be opened a little wider; to make the movement slower, the valve *J* should be partly closed. View (*b*) is a sectional view of the oil dashpot, taken at right angles to that shown in (*a*). The plug valve *J*, it will be observed, must be turned with a wrench. The "feather" *k* extends the full length of the cylinder, and the piston *T* is cut out to receive it, so that the feather prevents the piston turning in its cylinder; and since the stem of piston *T* is keyed to the intercepting valve by the key *2*, the valve, also, is kept from turning. The oil cylinder is

filled by removing the screw plug *n*; it should always be kept full of oil.

78. Reducing Valve.—The reducing valve *O*, Fig. 36, is free to move back and forth a distance of about $\frac{3}{4}$ inch between pistons *3* and *4*. The valve is bored out to a neat fit for the piston *3*, which forms a dashpot that prevents slamming, while piston *4* acts as a guide for the valve. Two packing rings are provided to prevent the leakage of steam back of the valve, while the outlet *p* permits any steam that may leak by to escape to chamber *Q* and thence to the atmosphere through the drip pipe *q*. Atmospheric pressure, therefore, is always maintained back of the reducing valve. Steam pressure in chamber *g* acts on the entire face of the valve *O* (*4* being only an easy fit in *O*), while the area exposed to the steam in chamber *h* is less than half as much; hence, when the pressure in chamber *g* is something less than half the pressure in chamber *h*, it will close the reducing valve. In other words, when the pressure in chamber *g* exceeds a certain percentage of that in chamber *h*, it will close the reducing valve; whereas, when it falls below that amount, the pressure in chamber *h* will open the reducing valve.

79. Emergency Exhaust Valve. — The emergency exhaust valve, Fig. 37, really consists of two valves *N* and *K* operated by the piston *5*. The chamber *x* back of the piston is connected, by means of a pipe *6*, to an operating valve conveniently situated in the engine cab; the operating valve is very similar to those already described, only in place of being piped for steam to the boiler it is piped for air to the engineer's brake valve. Sometimes, however, it is piped to both places, in which event either air or steam can be used to operate the emergency exhaust valve.

When pressure is admitted into chamber *x*, piston *5* is pushed forwards, thus unseating the valve *K*; but the valve *N* remains closed until the piston *5* strikes *N*, when it too is opened. The smaller valve *K* is provided in order that the locomotive can be smoothly changed from compound to simple and without a shock while working steam with the throttle in any position. It accomplishes this as follows: During the

time that the engine is working compound, the receiver is filled with steam at receiver pressure; now, if the large passage of valve *N* were suddenly opened to the exhaust, receiver pressure would quickly drop so low before the intercepting valve could move to simple position that the running gear would be subjected to severe stresses. If the small passage of valve *K* is opened to the exhaust for a few seconds before the large passage is opened, the receiver pressure will drop more gradually, and the intercepting valve will have moved to simple position and

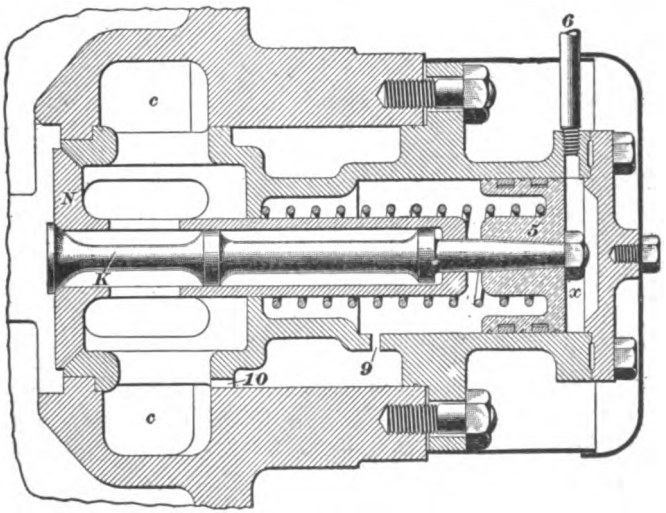

FIG. 37.

will have admitted live steam into the chamber *G* leading to the low-pressure steam chest through the reducing valve, by the time the larger passage is fully open, so that the receiver pressure will not fluctuate much, and the engine can be changed to simple without any disturbance. The small holes *9* and *10* prevent any accumulation of pressure in the chamber ahead of piston *5*, since *10* opens directly into the emergency exhaust passage *c*.

OPERATION.

80. Working Compound.—When this type of locomotive is starting with the operating valve in the compound position, it first works live steam in both cylinders for a few

revolutions of the drivers, and then automatically changes to a strictly compound locomotive as soon as the pressure in the receiver has been raised to the desired amount. The locomotive can be started compound by simply opening the throttle valve, the handle of the operating valve in the cab being left in compound position. This admits steam direct from the boiler into the high-pressure steam chest through the pipe *D*, Fig. 35, and into the chamber *L* through the small steam pipe *E*. The steam in chamber *L* passes through port *d* into chamber *g* of the intercepting valve, and, on account of the greater area in the front end *w'*, forces the intercepting valve into the position shown in Fig. 38. In this position, the intercepting valve closes the passages *m* and *n* that lead from chamber *I* to chamber *G*; and, since the exhaust valve *N* is closed, exhaust steam from the high-pressure cylinder banks up in the receiver as the locomotive moves forwards, and raises the pressure there. Also, in this position of the intercepting valve, live steam from chamber *L* passes through port *d*, reducing valve *O*, ports *b*, through chamber *e* into chamber *G*, whence it passes through the passages *R* and *S* into the two ends of the low-pressure steam chest, as indicated by the arrows. Both the high-pressure and the low-pressure cylinder, therefore, are operated for a time by live steam, although the pressure of the steam in the low-pressure cylinder is reduced by the reducing valve *O*. By the time the drivers have made two or three revolutions, the exhaust steam from the high-pressure cylinder has raised the pressure in the receiver sufficiently to cause it to move the intercepting valve into the compound position, as shown in Fig. 39. The intercepting valve remains in this position as long as the engine is working compound, for the following reasons: The pressure of the steam in the receiver on the faces *u* and *u'* balances, and hence produces no tendency to move the valve; the pressure of the steam from chamber *L*, acting on the faces *w* and *w'* of chamber *g*, has a tendency to move the valve into the simple position, but this tendency is overcome by the greater pressure of the steam in the receiver acting on the face *v* of cylinder *f*.

While the intercepting valve is in the compound position, it

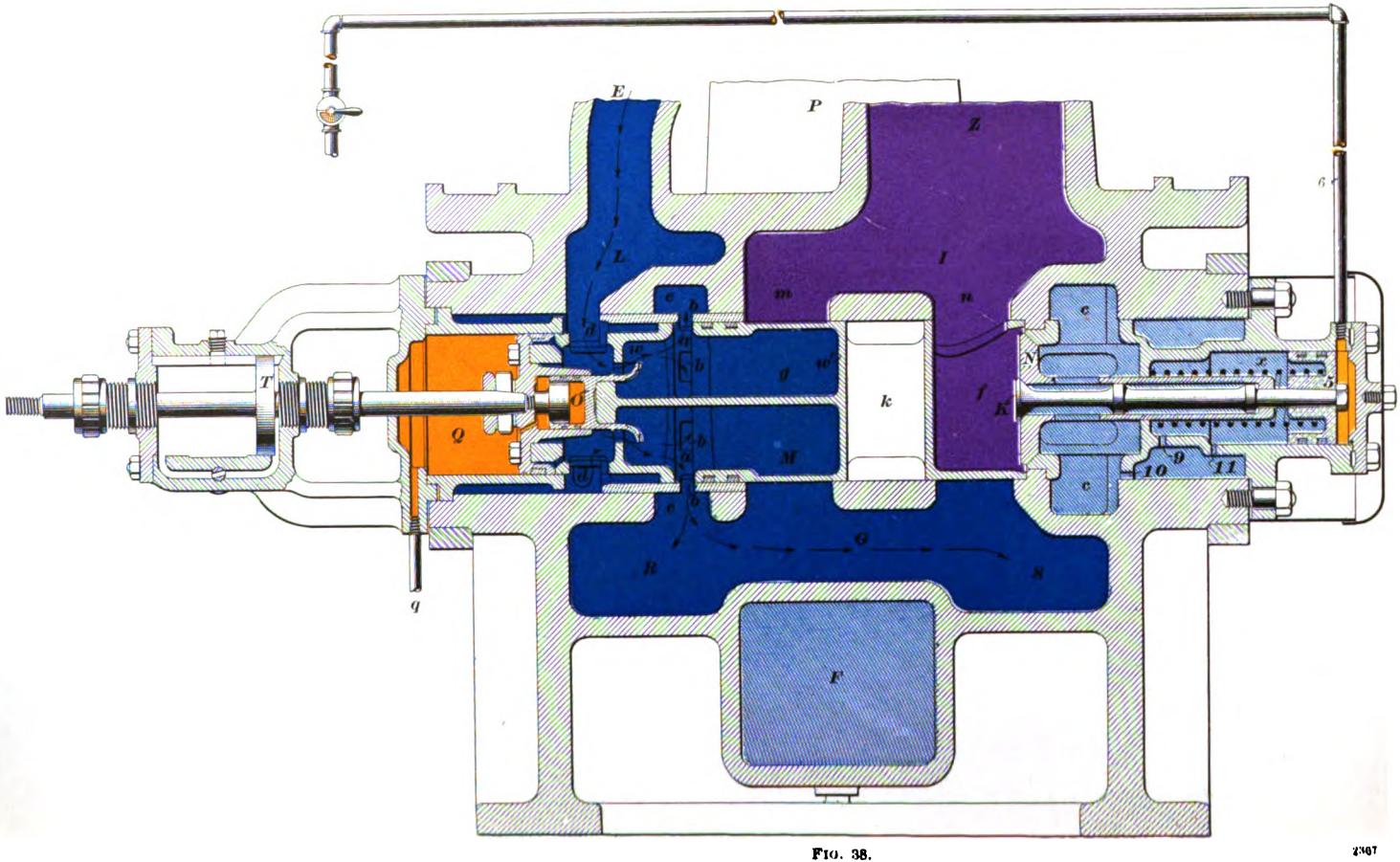

FIG. 38.

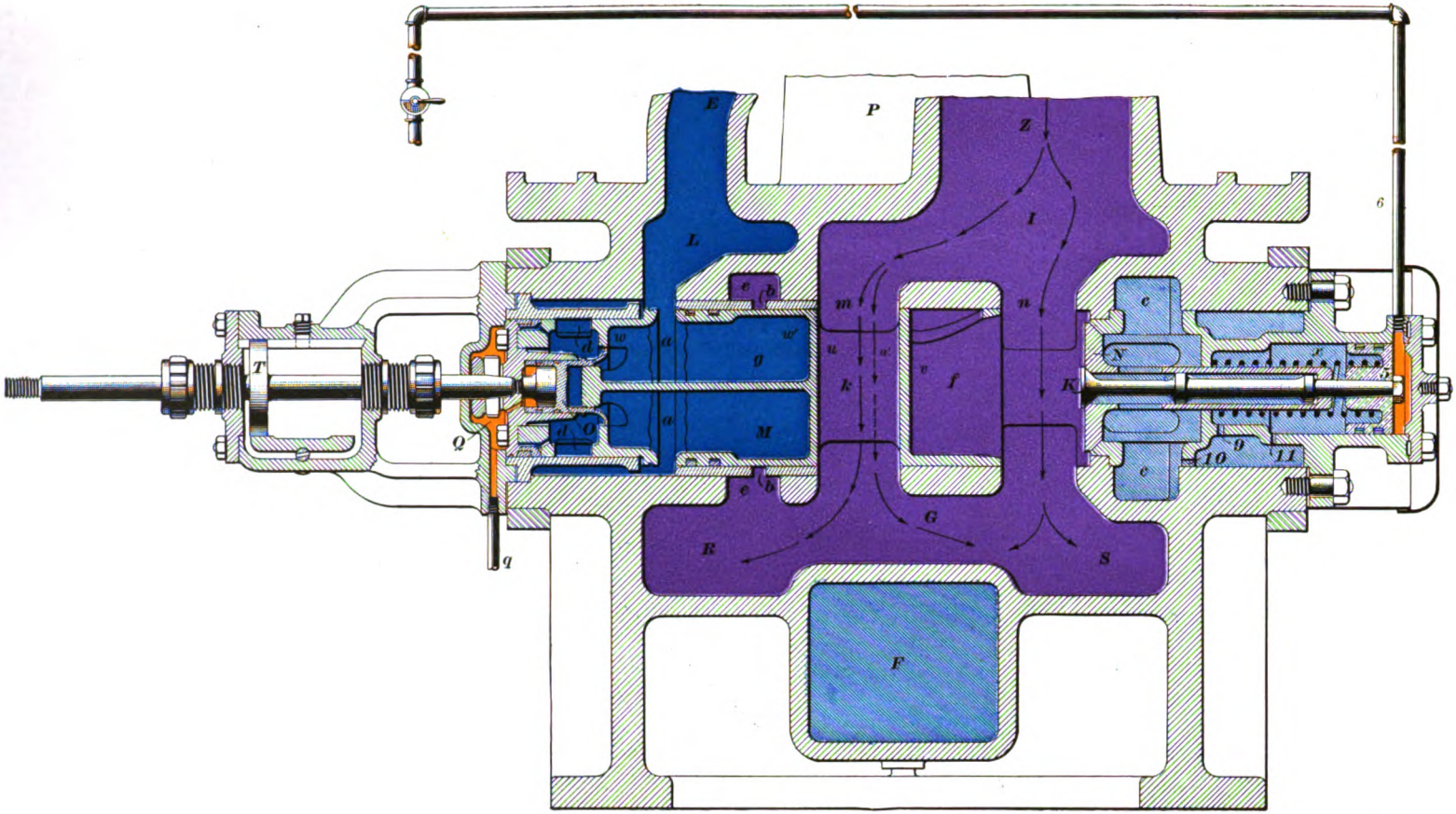

FIG. 39.

covers the ports *b* in its bushing; hence, no live steam can pass from chamber *L* into the low-pressure steam chest. The passages *m* and *n* from chamber *I*, however, are now open, so that the exhaust steam from the high-pressure cylinder is free to pass through the receiver into chamber *I*, and thence through the passages *m* and *n*, chamber *G*, and passages *R* and *S*, into the low-pressure steam chest, where it forms the supply of steam that operates the low-pressure cylinder.

81. Working Simple.—When the engineer desires to start the locomotive as a simple engine, he first turns the handle of the emergency operating valve to the position marked *simple*, so as to admit pressure into chamber *x*, and then opens the throttle (Fig. 40). The pressure in chamber *x* forces open the emergency exhaust valves *K* and *N*, while, by admitting steam into chamber *L*, the intercepting valve is caused to move into the simple position and to close the passages *m* and *n*; hence, the exhaust steam from the high-pressure cylinder passes through the receiver into chamber *I*, and is then obliged to pass out, through the exhaust valve *N* and the emergency exhaust passage *c*, into the main exhaust passage *F* and the atmosphere, as indicated by the arrows. The walls of chamber *I* are broken away to show how the passage *c* leads into the main exhaust passage *F*. The low-pressure cylinder is supplied with live steam at a reduced pressure through the reducing valve, as indicated by the arrows.

82. Changing From Compound to Simple.—At times, it is desirable to change the engine from compound to simple while working steam. To do this, the handle of the operating valve is merely moved to the position marked *simple*. This first causes the smaller exhaust valve *K*, and then the larger valve *N*, to open and reduce the pressure in the receiver gradually, until it is sufficiently reduced to operate the intercepting valve, thus converting the locomotive smoothly into a simple engine.

83. Changing From Simple to Compound.—To change the engine from simple to compound, the engineer simply moves the handle of the operating valve to the position

marked *compound.* This removes the pressure from chamber *x*, and the spring *11* forces the piston *5* into its forward position, closing the emergency exhaust valve. The steam from the high-pressure exhaust then raises the pressure in the receiver until it is sufficiently high to move the intercepting valve into compound position, when the locomotive operates as a compound.

OPERATING.

84. Working Compound.—To start the locomotive compound with a light train, it is simply necessary to move the handle of the operating valve into the compound position, if not already there, place the reverse lever in the corner, open the cylinder cocks, and, lastly, open the throttle. In starting thus, live steam is admitted into both cylinders for a few moments (see Fig. 38), after which the intercepting valve automatically cuts off the supply to the low-pressure cylinder, and connects that cylinder with the receiver, from which it thereafter receives its supply. Gradually hook up the reverse lever a couple of notches at a time, as the speed increases, until the lever is in the proper running notch, and carry the throttle as wide open as circumstances will permit.

85. Working Simple.—In starting on a grade or in starting heavy trains, the engine should be worked simple until the train is moving freely. To start an engine simple, move the handle of the operating valve into the position marked *simple*, drop the reverse lever into the corner, open the cylinder cocks, and then open the throttle. In this way, live steam will be worked in both cylinders (see Fig. 40) until the engineer converts the engine to compound. The engine, when worked simple to start a heavy train, will jerk less and will start the train more smoothly. It should be converted to compound, however, just as soon as possible after the train is moving freely. This is accomplished by turning the handle of the operating valve to the compound position. After changing to compound, the reverse lever should be hooked up a few notches at a time until in the proper running notch. As with the other types of compounds, the steam supply should be controlled with

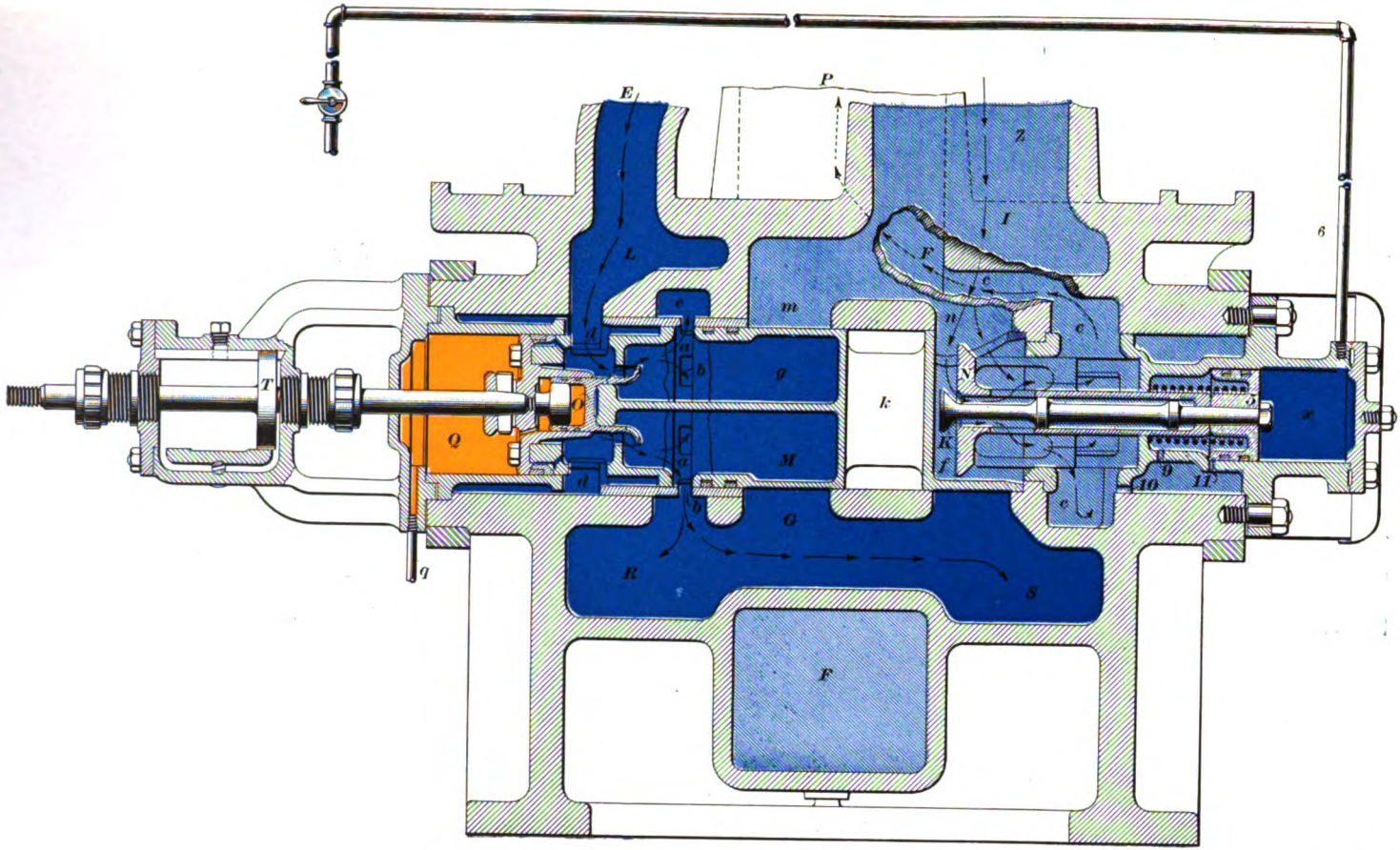

FIG. 40.

the reverse lever rather than with the throttle, and the throttle should be carried as wide open as circumstances will permit; in other words, carry the reverse lever and the throttle where they will handle the train best.

BREAKDOWNS.

86. Broken Main Rod: High-Pressure Side.—In case the rod on the high-pressure side breaks, take it down, block the crosshead securely, and clamp the valve on that side in the center of its seat, so as to cover both ports; then proceed, using the low-pressure side only. As soon as the throttle is opened, the steam in chamber *L* will force the reducing valve open, and live steam at a reduced pressure will be supplied direct to the low-pressure side.

87. Broken Main Rod: Low-Pressure Side.—In the event of a rod breaking on this side, take it down, block the crosshead in the back end of the guides, clamp the valve in the center of its seat, and move the handle of the operating valve to simple position; proceed, using the high-pressure side only. In this way, the high-pressure side will act as a simple engine, the exhaust passing out through the emergency exhaust valve.

88. Broken Valve Stem.—In the event of a valve stem breaking on either side, it will be necessary to disconnect the disabled side; hence, if a valve stem breaks, proceed exactly as though the main rod on that side had broken.

89. Blows.—In the Schenectady compound, blows in the slide valve and cylinder packing can be located in the same manner as in simple engines by working the compound simple.

When working compound, a blow of steam by the packing rings on the part *g* of the intercepting valve, Fig. 39, will allow live steam from chamber *L* to flow into chamber *G*, thus increasing the power on the low-pressure side.

The emergency exhaust valve *N* leaking, will allow receiver steam to blow into the emergency exhaust passage *c* and will be heard at the stack between exhausts when working compound.

Steam leaking by the packing rings on the reducing valve *O* will cause it to remain open when working simple if the vent pipe *q* is not kept open, thus getting boiler pressure in the low-pressure cylinder.

In case a low-pressure steam chest is broken, the engine can be brought in by using the high-pressure side as a simple engine. To do this, remove the intercepting valve and block the reducing valve in closed position, so that when the intercepting valve is replaced no steam can get into the low-pressure side with the intercepting valve in simple position.

Should the steam-supply pipe *6* to the chamber, Fig. 40, become broken, the intercepting valve can be forced into simple position by removing the head of chamber *x* and blocking the emergency exhaust valve open, in the position shown in Fig. 40.

PITTSBURG COMPOUND.

DESCRIPTION.

90. General Arrangement.—A cross-section of the cylinders and saddle of a **Pittsburg compound,** taken through the middle of the receiver *Y Z*, is shown in Fig. 41, in which *A* and *B* are the high- and low-pressure cylinders, respectively, and *C* is the intercepting-valve chamber. In this type of compound there is but one steam pipe *D*; it connects with a passageway back of chamber *I* (indicated by dotted lines) that divides into two branches at *G*, these branches leading to opposite ends of the steam chest. The exhaust passage *E* from the high-pressure cylinder leads to the under side of the intercepting valve in *C*, while directly above is the chamber *I* that connects with the end *Z* of the receiver. A passage *K* (indicated by dotted lines), back of the chamber *I*, connects one end of the intercepting valve with the exhaust pipe *P*. This is the emergency exhaust port through which the high-pressure steam exhausts during the time the engine is working simple. The end *Y* of the receiver connects with a steam passage *S* that divides into two branches which lead to opposite ends of the high-pressure steam chest. The exhaust passage *H* (indicated

by dotted lines) from the low-pressure cylinder leads directly to the exhaust. When this engine is working as a compound, therefore, the exhaust steam from the high-pressure cylinder first passes through the intercepting valve, and thence, through chamber *I* and the receiver into the low-pressure cylinder; the exhaust from the latter passes through the exhaust passage *H*

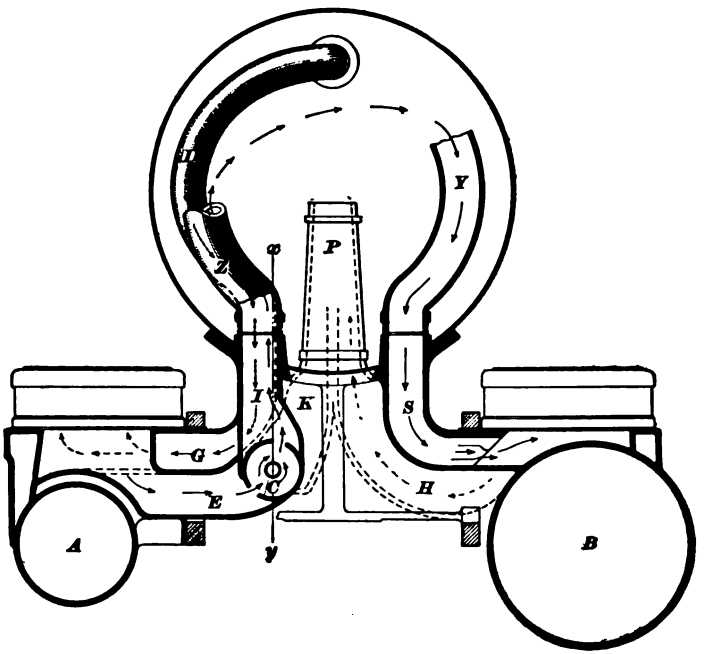

FIG. 41.

directly into the atmosphere. In working simple, the exhaust from the high-pressure cylinder passes directly into the atmosphere through the emergency exhaust port *K*.

91. Arrangement of the Valves and Passages.—A section of the high-pressure cylinder saddle, taken on the line *x y*, Fig. 41, showing the arrangement of the different valves and passages, is given in Fig. 42. In the figure, *M* is the intercepting valve and *O* the reducing valve. The chamber *I* connects with the end *Z* of the receiver. The passageway *F* connects with the steam pipe *D* and divides into two

branches *G*, as explained in connection with Fig. 41; hence, steam flows from the passage *F* directly into the two ends of the high-pressure steam chest. The passage *K* is the emergency exhaust passage, and leads into the main exhaust passage, as already explained. A short passageway connects chamber *c*, back of the reducing valve, with the steam passage *G* shown in Fig. 41; hence, cavity *c* is supplied with steam at the same pressure as the high-pressure steam chest.

92. Intercepting Valve.—This valve is in the form of a piston valve, and is so designed that it separates the ports *a* leading into chamber *I* from the ports *b* leading into the emergency exhaust passage *K*, although it can be made to connect the high-pressure exhaust port *E* with either port *a* or port *b* by simply changing its position. When the valve is in its backward position, as in Fig. 42, the cavity of the valve connects the exhaust port *E* from the high-pressure cylinder with the emergency exhaust port *K*, while, at the same time, the valve cuts off the ports *a* leading into the receiver. When in its forward position, it covers the ports *b* and connects port *E* with ports *a*. In order that the valve may be properly balanced, a passage *m* is made through it lengthwise, thus insuring the same pressure on both ends of the valve.

93. Operation of Intercepting Valve.—The means used to operate the intercepting valve are indicated in Fig. 43. The valve spindle *d* is connected, by means of the lever *L* and rod *R*, to a reversing mechanism *N* called the **reversing cylinder.** The object of this mechanism is to relieve the engineer of the necessity of converting the engine from simple to compound, or vice versa, by hand. A hand arrangement *H*, however, is provided for use in case of accident to the reversing cylinder. The steam for operating the reversing cylinder is supplied through the pipe *e*, and the supply is controlled by a valve operated by means of the rod *n*. This rod is so connected to the reach rod *r* that it operates a reversing valve *V*, so as to admit steam into the reversing cylinder and convert the engine into a simple one if the reverse lever is

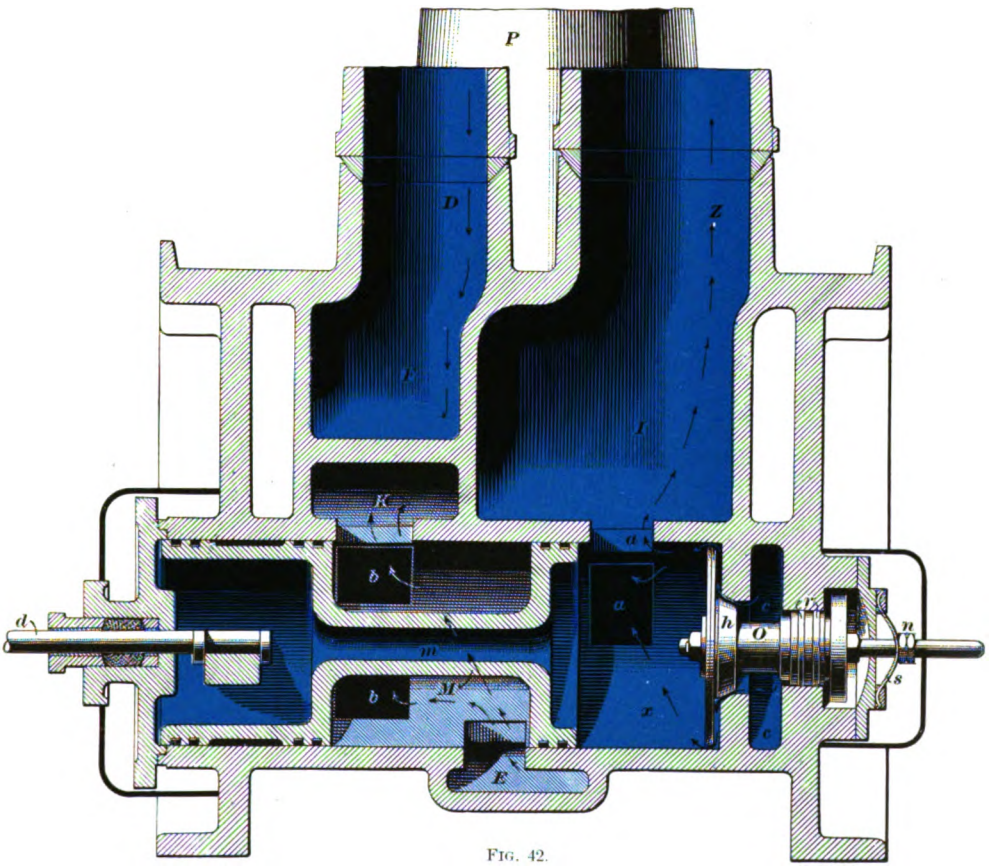

FIG. 42.

placed in either corner, or into a compound if the reverse lever is hooked up one or more notches from the corner. A stop-cock is placed in the steam pipe, so that, when desirable, steam can be entirely cut off from the reversing cylinder. Sometimes the mechanism for operating the reversing-cylinder valve is connected to the reverse lever instead of to the reach rod as described.

94. Reducing Valve.—The reducing valve *O* is shown open in Fig. 42, and closed in Fig. 43. It is provided with a ground-joint seat at *h*, Fig. 42, two packing rings *r*, and a spring *s*, the tension of the latter being adjusted by the nuts *n*. The tension of this spring should be only sufficient to prevent the valve rattling during the time the engine is running with steam off, and the valve should be easily moved by the hand against the action of the spring. The area of the valve *O* acted on by the steam in the chamber *x*, during the time the engine is working simple, is so much greater than that acted on by the steam in chamber *c* that the valve is closed when the pressure in chamber *x* increases to a certain proportion (sometimes less than a half) of that in chamber *c*. In other words, the reducing valve maintains a pressure in chamber *x* something less than half that in chamber *c*, thereby equalizing the total forces acting on the high-pressure and low-pressure pistons.

OPERATION.

95. Working Simple.—In this style of compound, the intercepting valve is wholly non-automatic, and it must be moved from the simple to the compound or from the compound to the simple position by means of the reversing cylinder *N* or the hand arrangement *H*, Fig. 43. So long as the reversing cylinder *N* is operative, the act of placing the reverse lever in either corner will cause the intercepting valve to be moved into the simple position (the handle *H* in its forward position); whereas moving the reverse lever one or more notches from the corner causes the intercepting valve to be moved into compound position, the handle *H* then going to its backward position.

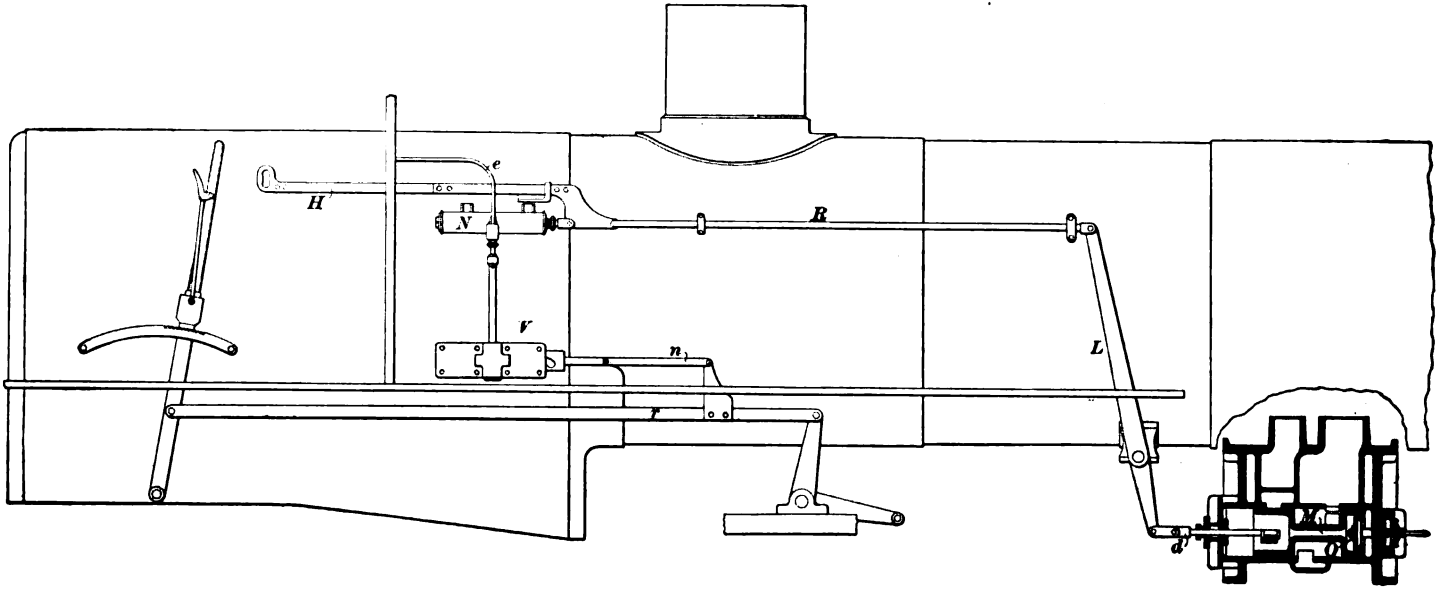

FIG. 43.

With the intercepting valve in the simple position, Fig. 42, the emergency exhaust port *K* is connected with the high-pressure exhaust passage *E* through the cavity of the valve *M* and the port *b*, and communication between the receiver *I* and the port *K* or *E* is cut off by the valve. When the throttle is opened, steam flows from the boiler into the high-pressure steam chest, and also into chamber *c*. The steam in the steam chest is used in the high-pressure cylinder and is then exhausted directly into the atmosphere through the exhaust port *E*, the emergency exhaust port *K*, and the exhaust pipe *P*, as indicated by the arrows. The steam in chamber *c* opens the reducing valve *O* and flows through chamber *x* and the port *a* into the receiver (as indicated by arrows), and thence into the low-pressure steam chest; after being used in the low-pressure cylinder, it is discharged into the atmosphere through the exhaust pipe *P*. The pressure of the live steam in the receiver is regulated to the proper amount by the reducing valve *O*.

Sometimes, as, for instance, when switching, it is desirable to work the engine simple at different points of cut-off; that is, with the reverse lever in notches other than the corner notch. To accomplish this, first place the reverse lever in the corner, so that the intercepting valve will be moved into the simple position, and then close the stop-cock (not shown in Fig. 43) in the reversing-cylinder supply pipe *e*, so as to cut off the supply of steam to the reversing cylinder; the intercepting valve will then remain in the simple position, regardless of the position of the reverse lever. Opening the stop-cock in the supply pipe will again make the reversing cylinder operative.

96. Working Compound.—When the intercepting valve is moved into the compound position, Fig. 44, the port *b* leading into the emergency exhaust passage *K* is covered by the valve, and the high-pressure exhaust port *E* is connected with the receiver through the cavity *M* of the valve and ports *a*. Also, the reducing valve *O* is held closed. Therefore, when the throttle is open with the intercepting valve in this position, the exhaust steam from the high-pressure cylinder passes through the intercepting valve and into the receiver, as indicated by the arrows,

thence passing through the receiver into the low-pressure cylinder, and out into the atmosphere through the exhaust passage *H* (Fig. 41) and the exhaust pipe.

OPERATING.

97. Working Compound. — To start a train with a Pittsburg compound, the engine should always be converted into a simple one until the train is fairly under way, when it should be changed to compound. To do this, place the lever in the corner (which converts the engine to simple), open the cylinder cocks, and then open the throttle. By the time the train has moved three or four car lengths, hook the lever up a notch or two (which converts the engine to compound), and, as the speed increases, continue to hook it up until it is in the proper running notch. No attempt should be made to run with the lever notched up higher than the fourth notch, since doing so will cause increased loss through condensation in the cylinders. The throttle should be carried as wide open as is possible under the circumstances.

98. Working Simple.—At times, especially when switching, it is desirable to work the engine simple, and yet be able to carry the reverse lever in different notches; in other words, it is desirable at times to use the engine strictly as a simple engine. This may be done by first moving the reverse lever to the corner and then closing the stop-cock in the steam pipe to the reversing cylinder; the locomotive can then be operated as a simple engine as long as desired, and with the reverse lever in any notch. The engine should always be changed to simple when drifting with steam shut off; or, if not convenient to do so, the throttle should be opened a "crack," so as to admit just enough steam into the cylinders to prevent the formation of a vacuum.

99. Changing From Compound to Simple.—Sometimes when climbing grades, it is found necessary to convert the locomotive from compound to simple to avoid being stalled. At such times, do not make the change unless it is strictly necessary and the speed has decreased to less than 6 miles an hour, and change back to compound again at the earliest

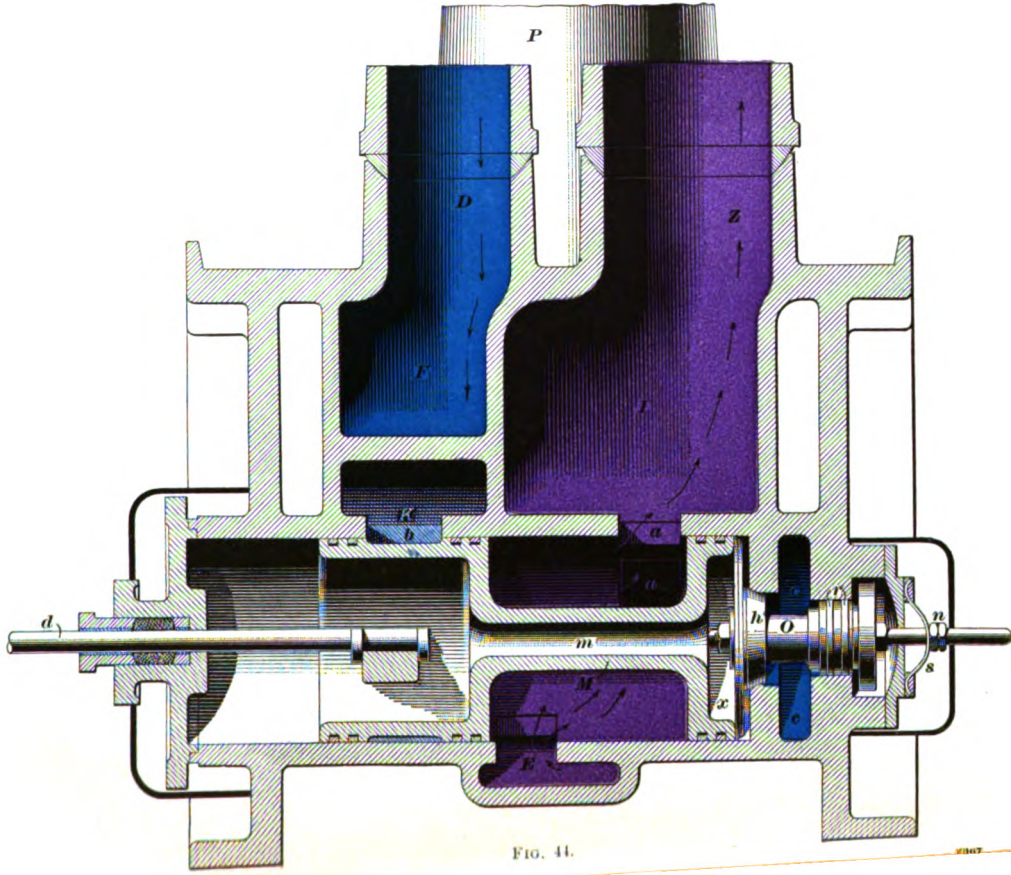

Fig. 44.

moment possible. Close the throttle somewhat just before changing from compound to simple, since otherwise the increased cylinder power is liable to cause slipping before the throttle can be closed sufficiently to prevent it.

100. Care of Engine.—The high-pressure cylinder requires a great deal more oil than the low-pressure cylinder; in fact, the low-pressure cylinder should only receive 1 drop to every 5 or 6 drops for the high-pressure cylinder. Fill the reducing-valve oil cup each trip, and oil the back end of the intercepting valve at least once a week. The operating mechanism of this compound is so constructed that it should convert the engine to simple by placing the reverse lever in the corner, and to compound by moving the lever one or two notches from the corner; if it does not do this, report the facts at once.

BREAKDOWNS.

101. Broken Main Rod: High-Pressure Side.—If the rod on the high-pressure side breaks, take it down, block the crosshead securely, place the steam valve of that side on the center of its seat and clamp it there, move the intercepting valve to simple position, and close the stop-cock so as to cut out the reversing cylinder, thus enabling the locomotive to be operated as a strictly simple engine; proceed, using the low-pressure cylinder only. Live steam will thus be supplied to the low-pressure cylinder through the reducing valve and the receiver.

102. Broken Main Rod: Low-Pressure Side.—In the event of this rod breaking, move the reverse lever to the corner to convert the engine to a simple one, and close the stop-cock in the steam pipe to the reversing cylinder, so that the engine can be worked simple. Take down the broken rod, block the crosshead securely, place a piece of wood under each side of the reducing-valve spring *s*, Fig. 42, and tighten up the nuts *n* until the spring pinches the wood sufficiently hard to hold the reducing valve shut against the pressure of the steam in chamber *c*; proceed, using the high-pressure cylinder only.

By thus clamping the reducing valve shut, steam is prevented from entering the receiver; hence, the low-pressure steam valve need not be clamped on the center of its seat.

103. Broken Valve Stem.—In the event of a valve stem breaking, proceed exactly as you would were the main rod on that side to break.

104. Blows.—Blows in the slide valves and piston packing of the Pittsburg compound are located as in a simple engine when the compound is worked as a simple engine.

A leak by the packing rings on the large head of the intercepting valve *M*, when in compound position, Fig. 44, will allow steam to flow by and condense in the chamber behind it if the vent (not shown in cut) is not kept open. The result of this is that when the engine is changed to simple the water will pass through the hollow *m* of the valve *M*, and will be thrown out with the exhaust from the low-pressure side; it will pass into the low-pressure steam chest with the live steam coming through the reducing valve *O*. The construction and arrangement of the intercepting and reducing valves of this type of compound give very little chance for trouble from defective packing rings or other leaks.

RHODE ISLAND COMPOUND.

DESCRIPTION.

105. General Arrangement.—This type of compound has two steam pipes in the front end, a large one leading to the high-pressure steam chest and a smaller one *E* leading to the chamber *L*, Fig. 45, above the intercepting valve *M*, which is located in the low-pressure side of the cylinder saddle. A receiver *Z* is so arranged in the smoke arch that it connects the exhaust passage from the high-pressure side with the chamber *I* above the intercepting valve. From the chamber *R* underneath the intercepting valve two passages *S* and *P* lead to the forward and back end of the low-pressure steam chest, respectively. The emergency exhaust passage *C* is connected with the regular

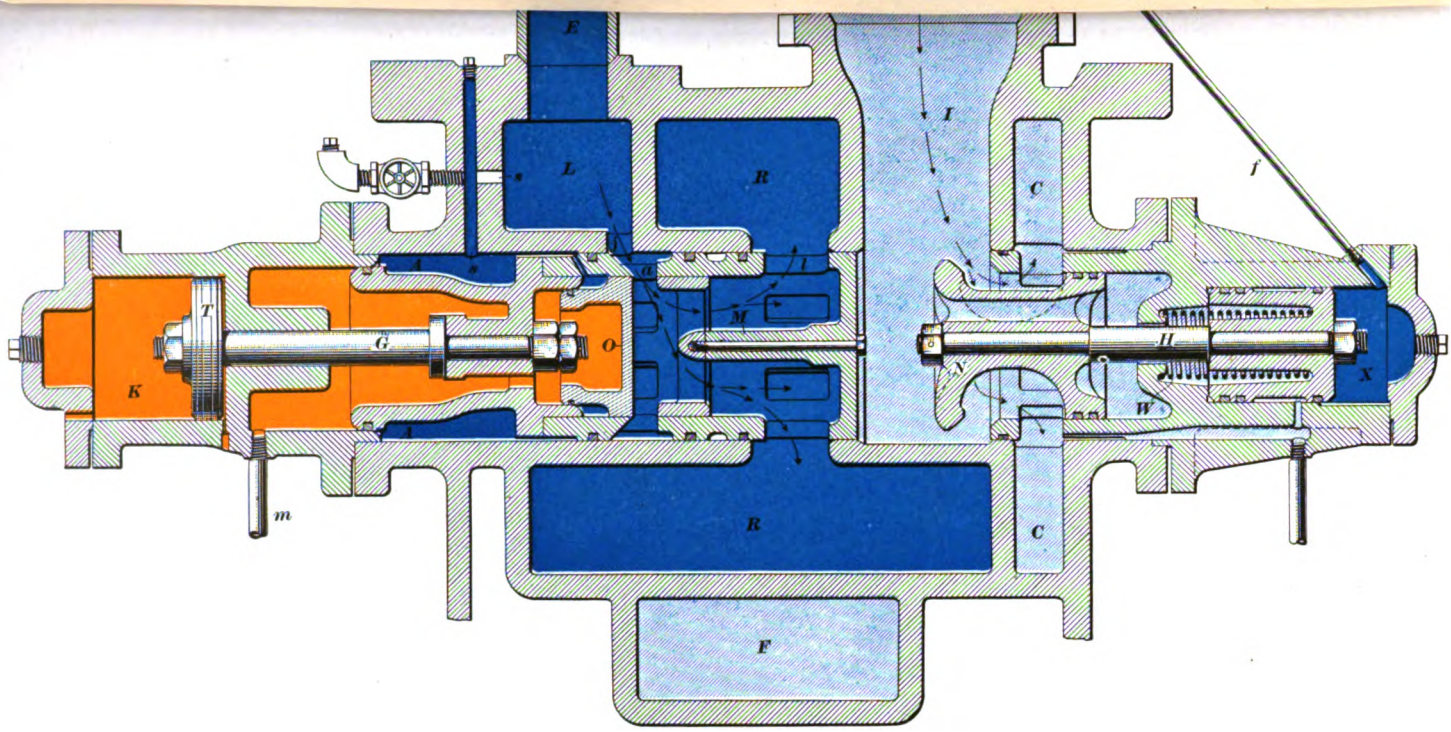

(c)

FIG. 45.

exhaust passage *F*, and this passage leads to the exhaust pipe. Steam is distributed into the cylinders by means of slide valves operating in the steam chests on each side.

106. Arrangement of Valves and Passages.—The intercepting valve, the reducing valve, and the exhaust valve are located in the low-pressure side of the cylinder saddle. *M* is the intercepting valve, *O* the reducing valve, and *N* the exhaust valve. The receiver is connected to chamber *I* on the low-pressure side and to the exhaust passage from the high-pressure steam chest on the high-pressure side. The small pipe *E* brings live steam from the dry pipe into the chamber *L* above the intercepting valve near its back end. A large steam pipe leads to the high-pressure steam chest. The small pipe *f* leads to the operating valve in the cab. A dashpot *K* has a piston *T* operating within it, which is connected by the stem *G* with the intercepting valve *M*. A small passage *s* leads from chamber *L* to chamber *A*, which entirely surrounds the back end of the intercepting valve *M*, and a small passage *t* leads from *A* to the chamber *B* behind the shoulder on the reducing valve *O*. The ports *a* lead from the passage *j* to the interior of the front end of the intercepting valve. Exhaust valve *N* is connected by the rod *H* with the piston *5*, which has a spring *W* behind it that tends to hold it in the closed position when there is no pressure in the receiver.

107. Intercepting Valve.—The intercepting valve *M* consists of three parts *r*, *h*, and *o*. The forward part *r* controls the passage between chambers *I* and *R* and *L* and *R*, and has ports *l* and *a* leading into its hollow interior. The part *r* has two packing rings. The part *h* has the reducing valve *O* within it, and is in communication with part *o* through the passage *i*. and its forward end is of smaller diameter than its rear end, A single packing ring is placed on this part. Part *o* is hollow which has a packing ring upon it. Connection from the hollow interior of this part to the atmosphere is had through the drip *m*.

The office of the intercepting valve is to divert the steam, as it comes from the receiver, either into chamber *R* or into the

emergency exhaust passage *C*, and, also, in connection with the reducing valve, to admit live steam at a reduced pressure to the low-pressure cylinder.

108. The Reducing Valve.—The reducing valve occupies a position within the hollow of part *h* of the intercepting valve, and has a limited movement in that part, but is moved with the intercepting valve when that valve moves. A packing ring on the back end of the reducing valve insures a joint between the annular passage *B* and the hollow interior of the valve *O*, and the interior is in communication with the atmosphere through the passage *i* and the drip *m*. In this way atmospheric pressure is maintained in the interior of the reducing valve when the intercepting valve is in the simple position. While the throttle is open, the annular chamber *B* is filled with live steam from chamber *L* through passages *s* and *t*, which exerts a pressure on the shoulder *g* to force it forwards at all times.

109. The Exhaust Valve N.—This valve is of piston form and controls the passage between chambers *I* and *C*. It is attached to piston *5* by rod *H*. Piston *5*, by means of the spring *W*, is held so that the exhaust valve is closed when there is no pressure in the receiver *I*. The valve *N* is provided with a ground joint at *x* that prevents steam leaking from the receiver into the exhaust passage *C* at that point, while its back end has two packing rings that prevent leakage to the exhaust at that point.

The valve *N* is hollow, and thus allows steam to pass from receiver *I* back of it and thence into chamber *y*; it is held to its seat by the pressure of the receiver steam on piston *5* and part of the pressure on the end *z* of the valve *N*, part of the pressure on that end being balanced by the pressure on the end *u*. The valve *N* is opened by admitting steam into chamber *X* back of the piston *5*. The small groove *b* allows any condensation in chamber *X* to pass into the hollow of the piston *5*, and thence into the drip pipe *c* into the atmosphere or through the drip passage *D* into the exhaust port *C*.

OPERATION.

110. Working Compound.—This type of engine is of the automatic compound class, and when first started with the operating valve closed, or in the compound position, and with no pressure in chamber *X*, behind piston 5, it will work live steam in both sides for a few strokes. View (*a*) shows how it passes to the low-pressure steam chest. It then changes to compound automatically, and the starting valve assumes the position shown in view (*b*). When the throttle is open live steam flows into the high-pressure steam chest and into chamber *L*. Pressure from the chamber *L*, acting through the passages *s* and *t*, on the shoulder *g* of the intercepting valve, forces the valve into the position shown in view (*a*), if it is not already in that position—there being no pressure in the receiver, as the high-pressure side has not yet exhausted. In this position of the intercepting valve, live steam passes through the reducing valve *O* and the row of ports *l* in the intercepting valve into chamber *R* and into the low-pressure steam chest. The reducing valve, owing to the difference in the surface exposed to pressure in chambers *r* and *B*, will operate to keep the pressure in *r* down to the proper amount to equalize the work done on each side of the engine. As the engine moves along, the high-pressure side is exhausting into the receiver *I*, and this steam soon raises the pressure sufficiently to force the intercepting valve back against the pressure in chamber *r* to the position shown in view (*b*). In this position live steam from chamber *L* is shut off and the receiver steam flows from chamber *I* into chamber *R* and thence into the low-pressure steam chest, becoming the supply of steam to that side, and the engine is working strictly compound.

111. Working Simple.—If it is desired to work the engine simple, the engineer places the operating valve in the cab into the simple position, which allows steam to enter chamber *X* behind piston *5*, through the pipe *f*, and forces the exhaust valve *N* from its seat, thus opening communication between chamber *I* and the emergency exhaust passage *C*, as shown in view (*c*); this allows the exhaust from the high-pressure side to escape into the atmosphere instead of going

into the low-pressure cylinder. The pressure on the front face of the intercepting valve *M* is thus relieved, and the live-steam pressure in chamber *B*, acting on the shoulder *g*, forces the intercepting valve over to the position shown in view (*c*). In this position live steam flows from chamber *L*, through ports *j* and *a* and the intercepting valve, into chamber *R* and thence into the low-pressure steam chest; it is used in the low-pressure cylinder and is exhausted through the exhaust passage *F*. Meanwhile the exhaust from the high-pressure side coming across through the receiver finds its way past the exhaust valve *N* into the emergency exhaust passage *C* and thence to the final exhaust.

112. Changing From Compound to Simple.—To change the engine from compound to simple, move the operating valve in the cab into the position marked simple, which allows steam to flow into chamber *X*, forcing the exhaust valve open and causing the intercepting valve to assume the simple position, as already explained.

113. Changing From Simple to Compound.—To change from simple to compound place the operating valve into the compound position, which shuts off steam to the pipe *f*, and allows the pressure in chamber *X* to escape; the spring *W* behind piston *5* then forces the emergency exhaust valve *N* shut, when the receiver pressure, acting on the receiver face of the intercepting valve, forces it back to the position shown in view (*b*), and the engine operates as a compound engine.

OPERATING.

114. Working Compound.—To start a light train, it is only necessary to place the handle of the operating valve in the compound position, put the reverse lever in the corner, and then open the throttle. This will allow the engine to work live steam in both cylinders for a time, after which the intercepting valve will be automatically moved into the compound position, as described. Then the reverse lever should be gradually hooked up until the proper running cut-off is reached, when the train will be handled at the required speed.

115. Working Simple.—If starting on a grade when the power of the engine is not great enough, as a compound, to start the train, or if in danger of stalling on a hill with the reverse lever in the corner, the engine should be converted into a simple one until the speed has been brought up to the proper point. This additional power is due to the fact that, as the high-pressure exhaust is allowed to go direct to the atmosphere, the back pressure that it otherwise exerts on the high-pressure piston is relieved, giving that much additional power on that side, while the live steam, admitted and regulated by the reducing valve into the low-pressure side, gives greater power to that piston than did the exhaust steam from the high-pressure side. As the speed is thus brought up, the engine should be again changed to compound in order to effect the fuel economy for which these engines are designed. After changing back to compound the reverse lever should be again notched up until the proper running cut-off is had.

BREAKDOWNS.

116. Broken Main Rod: High-Pressure Side.—In case of a broken main rod, disconnect, and block the crosshead as in a simple engine, clamp the valve so as to cover the steam ports and run in, using the low-pressure side. Live steam from chamber *L* will be supplied to the low-pressure side through the reducing valve. Place the operating valve into the simple position so that any pressure that might get under the slide valve into the receiver can escape through the emergency exhaust *C*, and not bank up in the receiver and in time shut off the steam to the low-pressure side by closing the intercepting valve.

117. Broken Main Rod: Low-Pressure Side.—In this case, disconnect, and block the crosshead, clamp the valve as in the case of a simple engine, and with the operating valve in simple position run in, using the high-pressure side as a simple engine.

118. Broken Valve Stem.—Proceed as in the case of a broken main rod on that side.

TRAIN RULES.

INTRODUCTION.

1. Purpose of Train Rules, Etc.—The **Standard Code of Train Rules** adopted by the American Railway Association is composed of (1) a set of general rules stating the duties of employes; (2) specific definitions of terms used in the code; (3) a system of watch inspection to provide that all the time-pieces shall agree as to the correct time, so that train movements can be regulated with exactness; (4) an explanation of the authority given by the time-table; (5) rules for the proper use of the various signals—fixed, movable, and audible; (6) the classification of trains, and rules for their movement by train orders; and, finally, (7) forms of train orders with explanations as to how trains should proceed under them, and their rights under each authorized form of train order.

2. By Whom Code Is Prepared.—This code has been revised, simplified, and its language amended from time to time by the Association (which is composed of the superintendents and managing officers of the numerous railroads using the Standard Code), until it is now set forth in as clear terms as can be made, the meaning of each rule being so plain that there can be no misunderstanding by any of the parties that may be working by its provisions.

The authorized version of April, 1899, is given at the end of this section, and the student should refer to it for definite answers to all questions submitted to him.

3. Thoroughness of Code.—By way of particularizing the information contained in the Standard Code, over five hundred different facts are stated in relation to the operation

of trains, of which we enumerate 5 items in the General Notice: 11 general rules; 19 definitions of terms used in the code; 106 rules relating to time-tables, signal rules, classification of trains, and the movement of trains; 122 rules for the movement of trains by train orders; and, lastly, 13 forms of train orders, nearly 300 principal subjects in all, many of which are subdivided. In addition to the Standard Code, there are many special rules put forth by the companies to suit conditions on each line, but they are not taken up in this Section, which is arranged to suit general, not special, conditions.

From the above enumeration, the student will understand why such a large number of questions as are given in connection with this Section are needed to bring out his knowledge of the Standard Code.

4. Prime Requisites in Railroading.—The first requisite in all train movements is **safety,** which calls for constant care on the part of each employe.

Next to safety come **promptness and exactness of dispatch,** by which is meant leaving exactly on time, moving at the uniform standard speed as provided for in the schedule or train orders, reaching all meeting points at the time specified by the schedule or rules, and passing all stations at the exact time shown in the schedule.

Unless exact time is kept, other trains than your own will be delayed, which will interfere with the operation of the whole system.

Exactness of movement is an important factor in securing safety of movement; for if a train comes along at the exact moment it is due, it is more easily looked out for than if it is late and is thereby delaying other trains, which may attempt to do work not authorized by the rules, but which is permissible when under the protection of a train order or signal by a flagman. The use of a special order or signal presupposes that the attempted movement has an element of danger in it.

5. Duties of Employes.—The General Notice that prefaces the Standard Code states that the fact of a man's

entering or remaining in the service is regarded as an assurance of his willingness to obey the rules—this being essential to the safety of passengers, employes, and property. It is further demanded that the service shall be faithful and intelligent, and all duties courteously performed. This is a rule that obtains in all lines of business, and an employe can only look for promotion when he follows the rules closely and shows that he has a capacity for greater responsibilities. To thoroughly understand and be guided by the general rules, a copy must be in your possession for reference.

You should be thoroughly acquainted with all changes made from time to time by special rules and instructions. When the special rules conflict with or countermand any previous rules, the latest special rule on that subject must be obeyed. These special rules are issued in the form of (1) bulletin notices; (2) printed circulars; (3) printed on the time-table; or (4) as train orders; and the places where these special notices are usually posted should be examined before each trip, to make sure that none are overlooked.

If there is any doubt as to the meaning of any rule, either general or special, the matter should be at once referred to the proper authority for a clear explanation.

So much is required of employes in the train service that examinations are necessary to test their qualifications as well as to see that all understand the rules alike and have the ability to carry them out. All persons employed in any service on trains are subject to the rules and special instructions, and as the safety of all may depend on the care and ability of any one of them, it is expected that all employes will give their assistance toward carrying out all of the rules and instructions.

The safety of the train and its load depends on each employe having a clear idea of his duties and a clear head to perform them; for that reason, the use of intoxicants while on duty is prohibited by the code, and in several of the States by law, which makes such use a misdemeanor. As it is difficult to draw the line at the exact point when the use of liquor interferes with a man's faculties, the line is drawn clear down at the bottom, and frequenting places where liquor is sold or

drank is a sufficient cause for dismissal from the service —such dismissal being backed up by public opinion, which gives all law its vitality. As the use of tobacco is offensive to many passengers and patrons of the company, it is prohibited in and about passenger trains and depots.

To distinguish the employes charged with duties connected with the passenger service, they are required to wear badges and a prescribed uniform, and since the company is judged by the appearance of its employes, self-respect will dictate that all be neat and tidy in their dress and polite in their manners.

As there are times when the property of the company may be endangered and no one especially charged with its care be present, the rule calls on all to look out for the protection of such property, whether in their particular line of duty or not.

TRAIN RULES.

DEFINITIONS.

6. Various Kinds of Trains.—A **train** is defined as an engine, or two or more engines coupled together—whether any cars are attached or not—displaying markers. It is to be understood that **markers** are signals that are carried at the rear to show that the vehicle bearing them is the last one in the train. Thus, a marker on a single engine running head first would be a green flag by day and a green light by night, showing toward the head end and also toward the side, and located on each side of the rear end of the tender. On a train of cars, the markers are displayed from each side of the rear car of the train, and is a notice to persons concerned that the train is all there. There is a difference between markers and **tail-lights**, as tail-lights are red and show toward the rear only. This is treated of in Rule 19.

A **regular train** is one that is represented on the *time-table*. It may consist of sections, each of which runs on the same schedule, either displaying signals for a following train or

following signals displayed for them by a preceding train. Rule 20 refers to the carrying of such signals, which are called **classification signals,** as they refer more particularly to the classification of trains.

An **extra train** is one not represented on the time-table. In train orders, any extra train, except a work train, is designated as an "extra"; a work train has the title of "work-extra," the name in a measure defining its character. This is further mentioned in form H of Train Orders.

Extras consist of one section, and each extra has some identifying mark to distinguish it from other extras. In the Standard Code, the number of the engine drawing the train is used for this purpose; in the case of a *double-header*, it is customary to use the numbers of both engines in the train order.

A **superior train** is one having precedence over other trains. There are three methods of giving a train precedence: (1) by *right*, which is conferred by train order, and can be given or taken away by competent authority; (2) by *class*, which is conferred by the time-table and lasts during the life of that time-table, unless taken away by a train order, as in the case of annulling a train; and (3) by *direction*, which is also conferred by the time-table, and affects only trains of the same class in their relation to each other. See Rule 81.

Right is superior to either *class* or *direction;* right is given by a train order or special instruction, which is to be obeyed instead of the regular rule with which it may conflict. A **train order** is a special instruction that may change the regular rule; therefore, rights given by train order are superior to class rights. A train order that gives rights to a train that the latter does not receive from the time-table, must be obeyed to the letter.

Trains of a *superior* class have precedence over those of an **inferior class,** as shown on the time-table, and over all extras unless the time-table rights are changed by train order.

Trains of the *same* class have their rights according to direction specified in the time-table. In the absence of any train orders or special instructions to the contrary, the train of same class not having the right by direction must keep off the time and out of the way of the train having this right. Form C

of Train Orders is used to change these rights from one train to the other.

The **time-table** is the authority for the movement of regular trains, subject to the rules. It contains the classified schedules of trains with special instructions relating thereto. Another definition of a time-table is, the general law governing the time of all regular trains at all stations. Thus it will be seen that the *time-table* should not be confused with the *general train rules*, which are not a part of the time-table, but are only printed on the same sheet of paper or in connection with it for convenience in consulting them.

Special rules relating to the schedule of a train are distinct from the *general rules* for train movements.

The **schedule** of a train is that part of a time-table that prescribes (1) its *class*, which shows its rights in relation to other trains; (2) its *direction*, which shows its right as to other trains of the same class; (3) its *number*, which is the name by which we identify it; and (4) its *movement*, which shows its leaving and arriving times at different stations. On the schedule of each train are found the signs that indicate regular stops, flag stops, or stations where the train does not stop.

Usually, the tracks over which trains are operated are known as **main tracks, sidings,** and **yards. A single track** is defined as one on which trains are operated in both directions by time-table or by train orders. This explanation applies also to a main track.

A **siding** is an auxiliary track for permitting the meeting or passing of trains. We are in the habit of calling a track used for unloading or loading cars a siding also, but the above definition is in relation to train movements only.

Yards are systems of tracks within defined limits, provided for the making up of trains, storing of cars, and other purposes, over which movements not authorized by time-table or train order may be made, subject to prescribed signals and regulations. Of course, it is understood that main tracks and sidings for passing trains can be, and are, within the limits of established yards, and the rules, both general and special, are so arranged as to facilitate as much as possible the yard work

without delaying in any way the operation of trains on the main line.

Yard engines are those assigned to yard service and working within yard limits. Yard engines carry different signals from those on main-line engines when at work as such (see Rule 18). The rules give them certain special rights inside yard limits.

A **pilot** is a person assigned to a train when the engineman or conductor, or both, are not fully acquainted with the physical characteristics or running rules of the road, or portion thereof over which the train is to be moved. A pilot is held responsible for the safety and proper running of the train, provided his instructions are obeyed by the crew in charge of the engine and train. He is expected to look out for meeting points on the time-table and on the orders, and to give the engineman running the engine sufficient notice so that he may handle the train properly. The pilot's name should appear on train orders addressed to any train he has in charge. See Rule 204.

7. Time Standard.—In order that all train movements controlled by the time-table or that have the element of correct time in consideration may be exactly carried out, it is necessary that all employes shall have the same **standard of time.** To secure this, at a certain hour of the day the correct standard time is sent to all offices on the line simultaneously by telegraph, and all watches used by conductors and enginemen must be compared with certain of these clocks (designated as **standard clocks**), before starting out on a trip, to ascertain if they show the correct time. It is not sufficient that the watches show the correct time after being compared with the standard clock, but they must also keep good time until the next chance for comparing them. Only watches that are in good order will do this, and to know whether or not they are in good order, it is necessary to have them inspected by a competent person at regular intervals, just as an engine needs close inspection at regular intervals in order to know whether it is in good condition. An engine, to do good work, must be well built from good designs and receive proper attention subsequently;

so also must a watch be well built and well taken care of. For that purpose, there has been devised a system of regular inspection that all watches in train service must pass, a certificate being granted to that effect, this certificate running for a certain length of time, after which the watch must be again inspected. A form that can be filled out showing the date when watches are compared is used for registering this comparison. Conductors and enginemen should compare time with each other just before starting out on a trip. In case they do not have access to a standard clock to get the correct time before starting out, it is customary to ask for the correct time by wire from a standard clock. These methods vary so much on different roads that the employe should first ascertain exactly how it is done on the road upon which he is employed, and then follow the instructions literally.

TIME-TABLES.

8. **General Explanation.**—Every time-table has a **number** by which it is identified, and also the **date** and **hour** at which it goes into effect. From the moment it goes into effect it **supersedes the preceding time-table,** which should be destroyed at once in order to prevent any chance of its being substituted or exchanged for the new one, thus preventing the use of an **outlawed** time-table. For the purpose of more easily distinguishing a new table from the old one, it is sometimes printed on paper of a different color, so as to attract attention. The time of day at which a new time-table goes into effect is usually set at an hour when a change of time will make as little trouble in the movement of trains as possible.

A receipt for the new time-table should be signed by both enginemen and conductors when it is issued to them, and it is customary, unless the receipt is on file in the dispatcher's office, to acknowledge by wire the receipt of a new time-table before starting out on the first trip that may come on the time of the new table. This is for the information and protection of the officer in charge of train movements.

In regard to the rights of trains at the time the new table supersedes the old one, there are two forms used that specify the rights of regular trains at that moment. Form A provides that a train of the preceding time-table thereupon loses both right and class and can thereafter proceed only by train order. No train of the new time-table shall run on any division until it is due to start from its initial point on that division, after the time-table takes effect.

This form of rule (A) takes away both train-order and time-table rights from all regular trains on the road at the time the new time-table goes into effect, and makes them get train orders as extras before they can move any farther. It is a correct move to get to a telegraph office at the time the new time-table takes effect so as to get orders without delay.

9. Form B of Rule 4 provides that each time-table from the moment it takes effect supersedes the preceding time-table. So far, it is of the same effect as Form A. But, in the treatment of regular trains on the road at the time the new time-table takes effect, it is much different. It states that a train of the preceding time-table retains its train orders and takes the schedule of the train of the same number on the new time-table. A train of the new time-table that has not the same number on the preceding time-table shall not run on any division until it is due to start from its initial point on that division, after the time-table takes effect. Thus, under the rights given by Form B of Rule 4, any regular train, where number and time were not altered, could run right along—off one time-table on to the next one. If the time were later on the new time-table than on the old one, the train would have to wait during the interval, as no train can run ahead of time, because it has no existence as a train until its time begins. If, on the other hand, its time were earlier on the new table than on the old one, it would be due at the exact time given on the new table, and inferior trains would have to keep out of its way. This train could make up the interval just the same as any delayed train. In the case of a train of the old table, whose number and schedule did not appear on the

new table, its rights of all kinds would die with the old table. A train of a new number would not run until it was due to start from the initial point on that division after the new table took effect.

Some companies use one form of Rule 4 and some another. Carefully study the time-table of your own road when answering questions in regard to this rule.

10. Government of Trains by Time-Table.—If a new train is timed to start from an initial point on any division before the time-table takes effect, that train cannot run on that division until the next day. If it is timed to start from the initial point after the time-table takes effect, it can run on that division on that day even though it may be a train that runs over several divisions previously and is timed on them previous to the time-table taking effect. For instance: We will suppose that there are three divisions of the same road, which we will call the First Division, the Second Division, and the Third Division. A new time-table takes effect at 12 noon, and train No. 4 is timed to start out on the First Division at 9 A. M., arrive at the initial point on the Second Division at 11:30 A. M., and leave at the same time; to leave the Second Division at 2 P. M., and start out on the Third Division at 2:05 P. M. This train could not run on the First Division nor on the Second Division, because it was timed to leave on each of them before 12 noon, the time the new time-table went into effect. But it could run on the Third Division as a regular train because its leaving time at the initial, or beginning, station was at 2:05 P. M., which is after the time the table took effect; the other trains that No. 4 had rights over would therefore have to get train orders or else keep out of No. 4's way.

By an **initial station** is meant the station at which a train begins its trip on a division. It is the station at which it is first timed to leave on its schedule.

11. Times Given on the Table.—On the time-table, not more than two times are given for a train at any point. Where one time is given it is, unless otherwise indicated, the

leaving time; when two, they are the arriving and the leaving time. Rule 92 contains something further on this subject.

12. How Meeting and Passing Points Are Indicated. The schedule **meeting** and **passing points** of a train are indicated by figures in full-faced type, thus, **3:15.** In order to attract attention to this matter, both the arriving and leaving times are in full-faced figures when both are meeting or passing times, or when one or more trains are to meet or pass it between those times; it is therefore necessary to look for more than one train there, if this double sign is on the time-table. There are other ways in which attention can be called to this matter of meeting more than one train at any point, the method adopted not being the same for all roads using this code.

To facilitate reading the time-table, and make it brief, signs are used that are placed before the figures on the schedule:

"s" indicates a regular stop.
"f" indicates flag stop for passengers or freight.
"¶" indicates stop for meals.
"l" indicates leave.
"a" indicates arrive.

The days on which the trains are due to run are usually printed in the same column with the time, and the class of the train appears on the time-table at the top of the columns.

SIGNAL RULES.

13. General Remarks.—In order that employes whose duties require that they give signals can do this work properly, they are held responsible for providing themselves with suitable flags of the prescribed color for use in daytime, and with lamps of the prescribed color for use by night. The night signals are to be displayed from sunset until sunrise, and at the same time the flags should also be used if the daylight is bright enough so that the flags will be plainly visible. In foggy or dark weather, during the day, the night signals should be used in addition to the flags. **Red** is the universal color for "stop," **green** is generally used for "caution," and **white** is a

"safety" color. There are other colors used for caution and safety, of which yellow is one, the practice of different roads varying in this matter.

14. Lamp Signals.—A hand-lamp, when stationary in a yard, should not be mistaken for a fixed signal of the same color. The effectiveness of lamp signals depends as much on their positive motion in a prescribed manner as on the color of the signals, and it should be borne in mind that both hand-signals and lamp-signals must be so made as to leave no doubt as to their meaning.

When swung across the track it means "stop at once."

If raised and lowered vertically, it means "proceed."

If swung vertically in a circle across the track when train is standing, it means "back up"; it is customary to continue giving this signal at intervals while the train is backing up.

If swung in a full-arm circle across the track while the train is running, it is a signal that the train is "parted," and such signal should be repeated until a response is given by the engineman. The engineman should give the "break-in-two" signal immediately when he discovers that the train has parted, and continue giving it at intervals until he is certain the rear-end men know of it.

If swung horizontally in a small circle when the train is standing (the movement being similar to that of a brake wheel), it is the signal to *apply* the air brakes; the signal to *release* brakes is given by holding the lamp or hand at arm's length above the head.

It is important that this signal should not be confused with the signals sometimes given to start ahead; as a signal to release the air brakes does not mean "go ahead," the brakes must be inspected to be sure that they are O. K. before leaving. Any object waved violently by any one on or near the track must be regarded as a signal to stop. Persons not in the service of the company may see some danger to the train, and as they do not always know the code of proper signals, any violent signal must be taken for "stop"; so ascertain the cause before proceeding.

15. Fusee Signals.—A fusee is an extra danger or caution signal. It is lighted and placed on or near the track and denotes that a train has recently passed which must be looked out for, or that some condition of track requires a stop, or caution in subsequent movements. A red fusee indicates danger and must not be passed until it burns out. A green fusee indicates caution and denotes that the train must be brought under perfect control, and a sharp lookout kept for a danger signal.

16. Whistle Signals.—The whistle signal given by the steam whistle of the engine should be clear and distinct, and the blast should be of the proper length, as specified in Rule 14, with the proper interval of silence between the blasts. Signals intended to be heard a long distance should be given louder and longer than those for a short distance. Some of the signals are prescribed by law, and must be given with the proper intervals, so that they can be easily understood and not be confused with signals given for another purpose. For instance: The signals prescribed for a public crossing at grade should be given clear and distinct, and not with some of the blasts running together; this should be done in order that this signal may not be mistaken for the break-in-two signal or the signal to denote that signals are being carried for a following train. A careless use of signals impairs their effectiveness.

One short distinct blast means "stop—apply brakes."

Two moderately long blasts with a short interval between them means "release brakes."

One long blast followed by three short blasts is a notice for the flagman to go back and protect the rear of the train.

Four long blasts is the signal to call in the flagman from West or South.

Five long blasts is the signal to call in the flagman from East or North.

Three long blasts, when running, means that the train has parted. This signal must be repeated until answered from the train as prescribed by Rule 12. This same signal must be used in answer to a signal from the train that the train has parted.

Two short blasts close together is an answer to any signal given to the engineer that is not otherwise provided for. This signal is sometimes called the "all-right" signal.

Three short blasts close together, when the train is standing, is a signal that the train is about to be backed up. It is also the proper answer to a signal to the engineer to back up.

Four short blasts close together is a signal given when calling for signals from some one else that will govern the movement of your engine or train.

One long blast followed by two short ones should call the attention of trains of the same or inferior class to signals displayed on your engine for a following section. If this whistle signal is not answered by the trains whose rights are affected by the classification signals carried by you, it is your duty to be sure and get the notice to them at once, even if it requires a stop and a personal notice to the crew of such train.

Two long blasts followed by two short ones is the signal given when approaching public crossings at grade. This signal is required by law in a great many States, and should be properly given, and at the legal distance prescribed, in order that it may be a legal notice.

A succession of short blasts is an alarm for persons or cattle on the track, and calls the attention of trainmen to danger ahead.

17. Torpedo Signals.—Torpedo signals are audible signals made by an explosion which produces a loud sharp report, that attracts the attention of all hearing it. Torpedoes should not be placed where they will injure any one by their explosion; thus, they should be kept away from passenger platforms and other localities where passers-by might be injured by fragments. The explosion of one torpedo is a signal to stop, the explosion of two—not more than 200 feet apart—is a signal to reduce speed and look out for a stop signal later. In case two torpedoes are put down and only one of them explodes, it gives the stop signal, while it is intended for "proceed slowly"; the train should stop at once, and a man be sent ahead, if necessary, or the train proceed very cautiously.

18. Air or Bell-Cord Signals.—Signals given by the air signal or by the bell cord operating the cab bell on the engine are used as follows:

Two sounds when train is standing is a signal *to start.*

Two sounds when the train is moving is a signal to *stop at once.*

Three sounds when the train is standing is a signal to *back up.*

Three sounds when the train is running is a signal to *stop at the next station.*

Four sounds when train is standing is a signal to *apply or release air brakes.*

Four sounds when train is running is a signal to *reduce speed.*

Five sounds when train is standing is a signal to *call in flagmen.*

Five sounds when train is running is a signal to *increase speed.*

It will be noticed that one sound alone is not used for a signal, as it may be given accidentally, as by the train parting, or by some derangement of the signaling apparatus.

TRAIN SIGNALS.

19. Engine Lights.—The headlight will be displayed to the front of every train by night, but must be concealed when a train turns out to meet another and has stopped clear of main track, or in standing to meet trains at the end of double tracks, or at junction points. You will notice that no particular class of train is specified in this rule, which makes it apply, therefore, to every train—even to a passenger train in to clear for a freight, or a superior train in to clear for an inferior train. It is customary to regard an open headlight showing toward an approaching train as a signal that the route of the approaching train is blocked. If the headlight is covered, the route is supposed to be clear. In case a headlight is obscured by cars ahead of it concealing it from the view of the approaching train, it is acting the part of safety to flag the approaching train in case its track is not clear. If two or more trains are taking the siding

for an approaching train, it is a safe precaution for the leading engine to show an open headlight until all the trains are in to clear. Rule 17 does not in so many words specify this, but special rules do. In the absence of any special rules to govern the case of a disabled headlight that does not show as provided by Rule 17, it should be the duty of the person in charge of the train to notify the superintendent that the headlight is disabled.

20. Yard-Engine Lights.—Yard engines will display a headlight to both front and rear by night. In case there is no headlight showing to the rear, two white lights must be displayed. The two white lights are to show that the engine is a yard engine, and hence that no markers are displayed; therefore, the rear of the engine itself, or the string of cars attached to it when at work, does not show that the entire train has passed, as is the case with main-line trains. Yard engines will not display markers.

21. Markers.—On each side of the rear of every train a green flag will be displayed by day as markers to indicate the rear of the train. By night will be displayed a green light to the front and side and a red light to the rear. When the train turns out to be passed by another and is clear of the main track, the red light must be changed for a green one so that green lights will then show to the front, side, and rear.

Ordinarily, the markers and tail-lights are combined in one lamp having three or more lenses of the proper color.

It is very important that these lamps be in good order and burn brightly, as the green light showing ahead is a signal to the engineer that the rear end is coming, the one toward the side is the marker for passing trains or station employes, while the red light serves to locate the rear end of the train for following trains, that they may not come in collision with it.

22. Trains Running in Sections.—When a regular train runs in sections, all the sections except the last one will display two green flags by day or night, and in addition, two green lights by night in the places provided for that purpose on the front of the engine. These signals are called *classification signals*,

as they show that the following section has the same class rights as the train carrying the signal. The place provided for these signals is up next the headlight or stack, whether the engine is running forward or backward, while markers are carried at the rear end. If the engine is backing up, the markers will be carried on the pilot.

Extra trains carry two white flags by day and in addition two white lights by night, in the places provided for that purpose on the front of the engine.

While Rule 20 does not say in so many words that only regular trains can carry green signals for a following section, yet the definition of a regular train makes that clear.

23. Double-Heading.—If two or more engines are coupled to a train, only the leading engine will display the signals, as provided in Rules 20 and 21. The flags must not be taken down at night when the lamps are displayed, but flags are to be used both day and night with the addition of the lamps between sunset and sunrise.

In case only one flag or lamp is displayed where two are required by Rules 19, 20, and 21, it will indicate the same as two; but in order that they may be visible to all concerned, no matter on which side of the engine they may be located, it is very important that two be displayed so that all can see them.

24. Signal Given by Train Carrying Following-Section Signals.—The signal to be given by the engineman carrying signals to call the attention of trains of the same or inferior class to signals displayed for a following section is one moderately long blast followed by two short ones. This should be carefully attended to, as it is a matter of the greatest importance that trains be notified of following sections. Enginemen of trains that may be notified by the whistle signal that signals are carried for following sections, should reply with the answering signal of two short blasts of the whistle.

25. Engine Pushing Cars.—When cars are pushed by an engine (except when shifting or making up trains in yards) a white light must be displayed on the front of the leading

car at night. It is also customary to provide for a man to be stationed on this leading car at the end farthest from the engine, either by day or by night, to keep lookout and give signals, if necessary. This is certainly a safety precaution in case cars are pushed over public crossings, in order that warning may be given if persons are on the track or the track is in any way obstructed. See Rule 102.

26. Signaling From Cars to Engine.—Each car on a passenger train must be connected with the engine by a communicating signal appliance. This may consist of a bell cord reaching from the rear end of the last car to the gong bell in the engine cab, or to an air-signal device. It should be tested before starting out on a trip, to be sure that it is in working order. You will notice that Rule 16 does not state anything about *one* sound of the signal. If only one sound is given, it is a sign that something is wrong with the signal apparatus or that the train has parted. In the event of the signal apparatus being at fault, it may be that the trainmen are trying to give the proper signals and that the device does not work after the first pull. Notice should be taken at once of *any* signal that may be given, and attention directed to the other end of the train, in order to see if other signals are given.

27. Protecting Workmen Under Engine, Etc. Steps should be taken to protect persons that may be working under or about any car or engine, so as to insure its not being moved or even having anything else coupled on to it. For this purpose, a blue flag by day and a blue light by night is displayed on one or both ends of any engine, car, or train it is thus desired to protect, and no car, train, or engine must be moved while so protected. When a blue flag or light is thus displayed, it must be removed only by the man that placed it there. Other cars must not be placed so as to hide or cover the view of the blue signal without first notifying the workmen in order that they can set the blue signal where it is again visible. If a car thus protected is moved, it may kill or wound the workman that relies on the protection of this signal.

A fixed signal is one of fixed location indicating a condition

affecting the movement of a train. They are used at railroad crossings, junction points, stations, and other points, in accordance with special instructions issued by proper authority.

28. Signals Imperfectly Displayed.—It is one of the foundation rules for the use of signals that a signal imperfectly displayed, or the absence of a signal where one is usually shown, shall be regarded a **stop signal,** and the fact must be reported as soon as possible to some responsible authority. If an imperfectly displayed signal were to be regarded as a "clear" signal, the train might get up so close that a stop could not be made at the proper place; also, if the absence of a signal were regarded as a clear signal, it might cause the same trouble. Thus, the proper and safe plan is to at once reduce speed and be ready to stop. Also, the occurrence should be reported to the proper authority at once, so that following trains can be notified and measures taken to have the signal properly displayed or replaced.

29. Stopping at Flag Stations.—To stop trains at a flag station, a combined green and white signal is to be used. In case a train is to be stopped at any point not a flag station for that train, a red signal must be used. This would imply that a green and white signal will not stop a train unless it is shown on the schedule that it is a flag station for that train.

When any signal is given to stop a train, it must, unless it is a fixed signal, be acknowledged by two short blasts of the engine whistle, as provided by Rule 14. This is important especially when acknowledging signals of a flagman who is acting under Rule 99. If the conductor should happen to give a bell-cord or air-whistle signal at the same time, and the engineman answers, such answer may be mistaken by the flagman as an answer to his signal to stop, and the flagman should bear this in mind and be sure to get the engineman's attention.

30. Ringing Engine Bell.—The engine bell must be rung whenever the engine is about to move, in order to give warning to any one under or about the engine or the cars attached to that engine. It must also be rung on approaching every public road crossing at grade, and continued until the

crossing is passed. In many States this is required by law; the distance is usually 40 rods, in some cases 80 rods. The whistle must also be sounded at all whistling posts, some of which are for stations and railroad crossings, and others for highway crossings. Rule 14 requires that the whistle signal for highway crossings shall be two long blasts followed by two short blasts, with a short interval between each of the blasts; and for stations, junctions, and crossings of railroads at grade, a moderately long distinct blast. As a too frequent use of the whistle interferes with its effectiveness, and as it is also prohibited by law in many cities and municipalities, its unnecessary use is prohibited by Rule 32; still, it must be used when required by the law or by the rules.

Watchmen at public crossings are not allowed to use red signals except to stop trains. This rule implies that a watchman should have two flags, one to signal trains ahead and one to stop them.

CLASSIFICATION OF TRAINS.

31. How Classified.—Trains are classified on the time-table. Their schedules of leaving and arriving times, and also their numbers, are arranged in the several classes, *first*, *second*, *third*, and so on, in regular order. Trains of the first class are superior to those of the second; trains of the second class are superior to those of the third, etc. Extra trains are inferior to regular trains of whatever class. Therefore, first-class trains have the right of track over all trains of inferior class and extras; second-class trains have right of track over all third-class trains and extras; third-class trains have similar rights over inferior trains, and so on. Trains moving in a certain direction specified on the time-table are superior to trains of the same class moving in the opposite direction. This does not refer to extras, as they are not represented on the time-table and do not have any rights unless they are conferred by train order.

32. Train Losing Its Rights.—When any regular train becomes twelve hours behind schedule time, it loses all rights,

both those given it by train orders and by time-table, and can thereafter proceed only by special order. As this outlawed train loses its train-order rights, it follows that any meeting orders in its favor also die, and other trains so held can proceed against them the same as if they were annulled. See Rule 220.

MOVEMENTS OF TRAINS.

33. Train Leaving Initial Station.—A train must not leave its initial station on any division, or a junction, or pass from double to single track, until it is ascertained whether all trains due, which are superior, or of the same class, have arrived or left. At all such points it is customary to have a register, and all trains that arrive or leave register the fact, giving the train number and the exact time. This is the duty of the person in charge of the train; it should be promptly attended to, as inferior trains cannot proceed until it is definitely known that there are no overdue trains that affect their rights. In some cases a special rule requires the engineman of the train to find out for himself, by examining the register personally, that he has a right to proceed. If this personal examination of the register is not required by the rules, the engineman should inquire of the conductor if all overdue trains have arrived.

In the case of a train of the same class going in the same direction from an initial station or junction as the overdue train, it can proceed on its own schedule while on time and the overdue train will follow, being governed by Rule 91, which requires the overdue train to run five minutes behind the other's schedule except at meeting and passing points, where they can close up. This separation time varies on different roads using the Standard Code, and the student should inform himself as to the time limit used on his road.

34. Starting of Train.—The train must not start until the **proper signal** is given. This means a signal from the *proper person* as well as one given in the *proper manner*. The proper person to give a signal to start is the one in charge of the train,

the conductor; as he is the only man that is sure to know that the train is ready to move, it is his duty to find this out. At some crowded stations, the matter of starting trains is in the hands of one person, who gives signals for any and all trains to leave, which prevents delays that would otherwise hold all trains, as the time between trains may be very limited.

The signal should be given in the proper manner specified in the rules, so that there may be no chance of confusing it with other signals and so starting a train before it is ready to move.

35. Inferior and Superior Trains.—An inferior train must keep out of the way of a superior train. This is one of the most important rules connected with train operations, and for the safety of all, it must be lived up to literally. The superior train moves along relying on this being done, and the burden of its observance falls on the inferior trains only.

When there is a time limit of clearance imposed by the rules, in which the inferior train must clear the superior train, no part of the clearance time before the superior train is due can be used to get in off the main track. In case any train fails to clear the main track by the time required by rule, it must be protected as provided in Rule 99, by having a flagman out a sufficient distance to insure full protection, and the flagman must be out at the proper distance before the moment arrives at which the clearance time begins.

One of the cardinal points in the safety of train-movement is that a train which is not in to clear at, or before, the time specified, *must be protected.* At meeting points between trains of the same class, the inferior train must clear the main track before the leaving time of the superior train, and must pull into the siding when practicable. If necessary to back in, the train must first be protected as per Rule 99, unless otherwise provided. This rule applies to trains of the same class where one of them is superior by direction, and the one not having right to the main track should head in wherever possible, and thus leave the main track clear for the approaching superior train. If it is necessary to pull by the siding to be used for passing and back in, a flagman must first be sent out a

sufficient distance to insure full protection. Special rules are very often made to suit certain locations, providing that the superior train by direction shall take the siding.

At meeting points between trains of different classes, the inferior train must take the siding and clear the superior train at least five minutes, and must pull into the siding when practicable; in case it is necessary to back in, the train must first be protected as per Rule 99, unless otherwise provided. Rule 99 requires that the inferior-class train keep entirely off the main track for a space of five minutes before the superior train is due, and in case they cannot head into a siding they must be fully protected while pulling by and backing in.

An inferior train must keep at least five minutes off the time of a superior train running in the same direction, and the committee having in charge the revision of the Standard Code recommended that in case five minutes is not considered enough, it should be made ten minutes when the superior train is following. They also recommend that at meeting points of trains of the same class, a clearance time of five minutes be allowed for greater safety.

36. Approaching Meeting and Passing Points. Trains must stop at all schedule meeting or passing points if the train to be met or passed is of the same class, unless the switches are right and the track clear. This means that a train must approach such a point under full control and expecting to find the other train not clear of the main track. While the rule requires that the inferior train get in out of the way before the other train is due to pass the point, yet, there are so many conditions that may delay the inferior train after arrival at the schedule meeting or passing point, that for protection to both trains, it is necessary that the superior train be ready to stop, and this stop is made before reaching the switch that is to be used by the inferior train going on the siding. If the switches are all right and the track clear, the superior train is not obliged to come to a full stop; but if the inferior train is not there, all subsequent sidings must be approached prepared to stop, as the expected train may be delayed there and not be in to clear.

37. Trains Moving in Same Direction.—Trains in the same direction must keep at least five minutes apart, except in closing up at stations or at meeting or passing points. This rule makes no mention of any class rights, but trains of inferior class must keep at least five minutes off the time of superior-class trains, by Rule 89, and in that way not delay them. It is not unusual to increase the clearance time to ten minutes or more, as one of the dangers of train operations is that of a following train striking the rear end of the preceding one; this is the cause of a greater number of accidents than head-end collisions. When closing up at meeting or passing points, it is intended that following trains shall come in "under control," expecting to find the main track occupied.

There is some difference of opinion as to the exact meaning of the term **under control.** Its use implies such a speed as will insure getting stopped before striking any obstruction. This, when following a train, may mean a certain speed, as there will be all the distance from which the obstruction is first visible to stop in; but if meeting an approaching train, there will be only *half* that distance, as the other train will use half of it to stop in, and therefore the speed should be less than in the first case. A good definition of "under control" is that you should be moving at such a rate of speed that the train can be stopped in one-half your range of vision. This will be a very slow speed on curves and down grade, and a much higher speed on straight track, with all the conditions favorable to see a long distance. A usual error of all trainmen is underestimating the speed and momentum of their train when moving "under control."

38. Train to Run on Time.—A train must not arrive at a station in advance of its schedule arriving time. Rule 5 defines the schedule arriving time, as well as what is considered the leaving time.

A train must not leave a station in advance of its leaving time, one of the cardinal principles of the Standard Code being that a train has no existence until its schedule time has arrived, and, therefore, no train can run ahead of its schedule time even by virtue of train orders.

A regular train that is delayed and thereby falls back on the time of another train of the same class will proceed on its own schedule. This, of course, implies that the delayed train will keep a lookout for the following train in order to protect them against a rear-end collision. The train register will advise the following train that the other has preceded it.

39. Overtaking a Superior Train.—A train that overtakes a superior train, or a train of the same class so disabled that it cannot proceed, will pass it, if practicable, and, if necessary, will assume the schedule and take the train orders of the disabled train, and proceed to the next open telegraph office and report to the proper officer. The disabled train will assume the schedule and take the train orders of the last train with which it has exchanged, and proceed to, and report from, the next open telegraph office. It is obvious from the wording of the above rule that it provides for one train passing another of the same or superior class at a non-telegraph station; because, if this were to happen at an open telegraph office, it could be at once arranged by train order, and so no delay or difficulty occur to the train passing the disabled one. The qualifying words "if necessary" mean that if the train can proceed on its own rights and orders, it need not exchange orders with the disabled train, but may pass it and proceed to the next open telegraph office and report for orders. If the schedule and orders are exchanged, such action invests the disabled train with the rights and orders it has received in exchange for the ones it had, and if more than one exchange is needed with passing trains, this rule still holds good. When exchanges are thus made, the disabled train is less liable to become outlawed by getting over twelve hours late.

40. Displaying Signals for Following Section.—A train must not display signals for a following section, nor an extra train be run, without orders from some proper authority specified in the rules. This keeps in the hands of one responsible officer the power of starting trains not already provided for by the time-table.

When signals displayed for a section are taken down at any point before that section arrives, the conductor will, if there is no other provision, arrange with the operator to notify all opposing trains of the same or inferior class leaving such point that the section for which the signals were displayed has not arrived. If there is no operator, the conductor will arrange with the switch tender, or, in the absence of both of these men, with the flagman left there for the purpose. A place is usually provided on each train register for registering the signal carried, which will give notice to all trains; for that reason, train registers should be carefully inspected, even if the train has been met at some other point. Although the rule does not say so explicitly, yet a written notice to the operator or switch tender is safer than a verbal notice of the signal carried, as there can then be no mistake in the train number. When the following section arrives and reports, the operator, switch tender, or flagman's duty is finished.

As the carrying of signals for a following section has the effect of giving the following section the rights of both class and direction belonging to the leading section, it is very essential to the safety of all trains of the same or inferior class that all these rules be strictly lived up to. The signals do not affect trains superior by class and direction, so no provision is made for notifying them. Trains of the same or superior class getting in between the sections do not affect the rights of any of the sections, and opposing trains need to see that they meet all the sections and also all regular trains that affect their rights, in order to work among sections carrying signals.

If a following section leaves a main track at a junction where there is no train register, operator, or switch tender, it is necessary, in order to avoid delay to opposing trains whose rights are affected, that a flagman be left at the junction to notify all concerned that the following section has arrived; otherwise, the opposing train would have no way of knowing this. This is a case not liable to happen very often.

41. Running of "Work-Extras."—Work-extras will be assigned working limits, and they cannot go outside those

limits without further orders. A work-extra is different from any ordinary extra train in that it can move both ways within certain defined limits, and no other extra is allowed inside of those limits without first advising the work-extra.

A work-extra is required to let other extras pass it without train orders to that effect, which is not the case with ordinary extras. Work-extras also use train orders directing them to run from one point to another, which do not allow them to move in both directions. A running order is not the same as a working order.

42. Approaching Junctions, Crossings, Etc.—Trains must approach the end of double track, junctions, railroad crossings at grade, and drawbridges prepared to stop if the switches and signals are not right and the track not clear. Where required by law, trains must stop. This provision is necessary, as at many of these points Rule 83 requires that it must be ascertained that there are no overdue trains whose non-arrival will affect your rights.

The laws of nearly all the States require a full stop at railroad crossings and drawbridges, unless an interlocking machine is in operation and the signals and switches are clear.

43. Train Stopping or Being Delayed.—When a train stops, or is delayed, under circumstances in which it may be overtaken by another train, the flagman must immediately go back with stop-signals a sufficient distance to insure full protection. This requires that he go back at once under all circumstances, as he has no means of knowing just how far back a following train is, or how great its speed and momentum may be. It is his duty to get back far enough so that his stop-signal will be observed in time by the engineer of the following train in order that he may have ample room to stop without running any risk of striking the first train, taking into consideration the grade and condition of rails. It is his (the flagman's) duty to take a full supply of signals suitable for the time of day and condition of the weather, and use them according to the rules formulated by each railroad for the use of stop-signals. This is a matter of life and death to both employes

and passengers, and no half-way measures are justifiable. When recalled by signals from his own train, he may return if he cannot hear or see a following train approaching, but in case a train *is* approaching, he must remain and get it stopped, before returning to his own train. Before he returns to his train, if no following train is in sight, he must place two torpedoes on the rail when the conditions require it. The usual method of placing torpedoes is to put two on the right-hand rail, about 200 feet apart, so they will make a double explosion, and notify the engineer that a flagman had been stationed there and recalled. The practice of railroads varies in this matter, each company making rules to suit its own conditions. The front of a train must be protected in the same manner by an employe designated for that purpose.

When a flagman goes back to protect the rear of his train, an employe designated for that purpose must at once take the flagman's place. On passenger trains, an employe is specially designated for this duty; on freight trains it is the duty of the next brakeman. This is in order to have another man ready to do the flagging in case the train proceeds before the regular flagman gets back to his post on the train.

44. Train Parting While Running.—If a train should part while in motion, trainmen must, if possible, prevent damage to the detached portions. This, of course, requires that the rear portion should be stopped before it can run into the front portion; therefore, it is necessary that the break-in-two shall be discovered as soon as possible after the train separates.

The signals prescribed by Rule 12 must be given by both trainmen and enginemen, the one that notices the break-in-two giving the signal at once, and the other answering the signal to signify that he understands. The front portion of the train must be kept in motion until the detached portion is stopped.

To detect a break-in-two when a train is being pulled, is easiest done by seeing the gap between the two parts, but experience in this matter teaches trainmen and enginemen to look out for jerks and surges in the train at various points on the line. If the train has separated into two parts, it will handle

differently from a train that is all together. After it is certain that the rear portion has stopped, the front portion will then go back to recover the detached portion, running with caution and following a flagman who can see the rear portion far enough off so that the front portion can be stopped soon enough to avoid damage. In many cases it will be necessary to go ahead to the next siding, leave the front portion there and then return with the engine for the rear portion, protecting yourself, if necessary, against any approaching trains that may be due at that siding before you can get back with the rear portion. This rule gives you an absolute right to return for the rear portion against any and all following trains, in order to get the rear portion out of the way as soon as possible. The detached portion must not be moved or passed around by any following engine or train, as that would risk a collision with the returning engine. After recovering the rear portion, you must then look out for all trains in either direction, and be protected against them, if necessary, in order to move.

45. Precautions When Pushing Cars.—When cars are being pushed by an engine (except when shifting or making up trains in yards), a flagman must take a conspicuous position on the front of the leading car and signal the engineman in case of need; this is to insure that the cars being pushed may not be moved up against other cars or obstructions on the track, and, further, to protect any persons crossing the track.

46. Orders to Be in Writing.—Messages or orders respecting the movement of trains or the condition of track or bridges must be in writing. It is of the utmost importance that they should be in writing; *first*, to make sure that they are understood, and *second*, that a record of the instruction or order may be in the possession of the man in charge of the execution of the train movement, so that he can refer to it and not depend solely on his memory. So important has this question always been considered, that it is rulable, when getting orders even from the highest authority, to insist that they be written, and not verbal orders alone. This, of course, refers to train orders or instructions regarding the movement of trains.

47. Communications From Flagmen, Etc.—In case of flagmen or watchmen, any communication they may make is in the nature of information, and the exact location of any bad spot in the track or obstruction should be ascertained beyond a doubt before moving farther.

48. Care of Switches.—Switches must be left in proper position after being used. Conductors are responsible for the position of the switches used by them and by their trainmen, except where switch tenders are stationed. Interlocking switches that are handled by a tower man are not in any way in the control of any of the trainmen, and they are not responsible for them; this rule refers to switches having separate connections thrown by hand. A switch must not be left open for a following train unless in charge of a trainman from preceding train; that is, a trainman of the preceding train must remain at the switch until relieved by a trainman of the following train, otherwise, the switch for the main track must be closed and locked.

Enginemen are expected to give attention to the proper closing of switches that they have just backed through with their trains, in order that they may be at once set for the main track, to avoid any danger to another train.

49. Responsibility for Safety of Train.—Both conductors and enginemen are responsible for the safety of their trains, and, under conditions not provided for by the rules, must take every precaution to insure such safety. In case of any failure on the part of one of them to observe the rules in regard to the rights of trains, to the possession of proper train orders, or to any of the precautions necessary for the safety of their train or others, it puts another man in a position to look out for those duties, in which case he also is held responsible for the proper observation of all the rules. The failure to conform to them may endanger the lives of all. Whenever any case of doubt or uncertainty arises, it is strictly prescribed that the safe side must be taken and no risks run. In many cases this will result in delay to the train, and a trainman or engineman that has a clear understanding of the rules and their

operation will not be in doubt very often, while the man that has not thoroughly informed himself will be running serious risks both to himself and others. These rules are as clear as can be made, unless special interpretations change their meaning on different parts of the same road.

TRAIN ORDERS.

50. General Considerations.—In the movement of trains by train order, much depends on those who are to execute them. The rules and forms of train orders are in a measure merely guides to action, depending on the judgment, care, and watchfulness of those concerned in their execution. **Safety** is the first consideration, and to this all else should be subordinate. To insure safety, it is necessary that every person interested in the movement by train orders should have a clear understanding of their meaning, and that the various forms of orders prescribed by the rules be thoroughly understood. Promptness and dispatch, though secondary, are of great importance in the successful movement of trains; hence, the importance of trainmen and enginemen being prompt in response to, and in compliance with, train orders. The train dispatcher in the issuing of orders is often obliged to govern his action on information received from the conductor; therefore, the latter should make special effort to impart all the information that he can in regard to the work that he has to do at various stations, etc. Trainmen can often save time to their own train, as well as others, by giving such information to the dispatcher. Information of this kind will enable the dispatcher to anticipate movements and have the necessary orders ready for trains when they are ready to act on them.

51. Carrying Out Orders.—Train orders should be plain and explicit and as short as it is possible to make them and yet embody the necessary information. The conductors and enginemen receiving them should insist upon their being plainly written in accordance with the rules, which admit of no

alteration, interlineation, or erasures, and should fully understand them before proceeding to act on them. The conductor should read the order aloud to the operator, and the engineman to the conductor. This is preferable to the operator reading it to the conductor and the conductor reading in turn to the engineman, since any mistake that the operator might make in reading would likely be made by the conductor in reading to the engineman, through his repeating it from memory rather than reading it from the copy in his possession. Errors in the carrying out of train orders have occurred through their being treated in this manner, and it is therefore deemed better practice to require the person receiving a train order to read it aloud to the person from whom it is received. As a measure of safety, conductors should show train orders to their brakemen, and enginemen to their firemen, and each should see that the orders are understood. This is advisable for two reasons: the brakemen and firemen should know what trains are to be met and passed, and should also be on the lookout to see that the provisions of the orders upon which their train may be running are complied with. The showing of train orders to brakemen and firemen is required by the rules of some roads, and these employes are held to a certain degree of responsibility in seeing that they are complied with.

RULES FOR MOVEMENT BY TRAIN ORDERS.

52. Use of Train Orders.—Movements not provided for by time-table will be regulated by train orders issued by authority and over the signature of the proper officer, who is usually the superintendent. Such orders must not contain any information or instructions that are not essential to such movements. They must be on the prescribed forms when applicable, and must be brief and clear and without erasure, alteration, or interlineation.

53. Nature of Train Orders.—Train orders are usually issued according to a form provided especially for that purpose. Several copies of these orders are made at one writing by the

use of a carbon sheet between the separate leaves; in this manner, each order is an exact duplicate of the other. If they are not brief and clear, there is danger of misunderstanding from a multiplicity of words. If they are not restricted to the prescribed forms, they are likely to be misunderstood by those who are liable to execute them in a manner not intended by the man that first composed the order; this provision is violated more often than really necessary. In regard to erasures, alterations, or interlineations, they introduce an element of danger, and it is not considered safe to accept an order with these defects.

54. Preparation of Train Orders.—Each train order must be given in the same words to all persons or trains addressed, the arrangement of the duplicate sheets of tissue paper providing for this when the operator is copying the order as sent by the dispatcher. Rule 209 further provides for this work; the purpose of this rule is to make sure that all persons that are to carry out the orders will get exactly similar orders, so as to understand just what has to be done. This feature of the Standard Code is one of its strongest safety precautions, since when all orders are in the same exact words, the wrong meeting places cannot be put in and make what is sometimes called a **lap order**; it also notifies each train just what the others are expected to do. Train orders are numbered consecutively each day, usually beginning with No. 1, and the time of changing the numbers is at midnight. Each order is intended to have a number of its own, in order to identify it, as well as to show which order last took effect. This number (of the order) does not depend on the number of the train but on the number of the last order previous; for instance, at midnight the numbers run out and the new series begin with the first order issued after that time—usually No. 1.

55. Issuing of Train Orders.—Train orders must be addressed to those who are to execute them, naming the place at which each is to receive his copy. Those for a train must be addressed to the conductor and engineman, and also to any

one that acts as its pilot; as the pilot is responsible for the movement of the train, the copy is usually issued to him first, and, on his approval, the conductor signs for it. In some cases, the pilot alone signs for train orders. A copy for each person addressed must be supplied by the operator, so that the number of persons addressed governs in a manner the number of copies to be issued. Rule 202 provides that the body of the train order, which states the movements, should be the same for all trains receiving it. Rule 204 relates to the address at the top of the order, which is different for each train; the place named in the address is where they are to sign for it. A custom that is not directly prescribed by the Standard Code is to issue copies of train orders to all the engineers when more than one engine is coupled to a train; this matter is provided for in the address.

56. Filling Up of Orders.—Persons receiving train orders should see that they are properly filled out in every detail before accepting them. An order is not valid unless it bears (1) a number, (2) the proper address of the person or train that is to act on it, (3) the name of station at which it is received, (4) the time the "X" response is given (if this form is used), (5) the time repeated or "O K" given, (6) the time made complete, (7) the signature of the operator, in space provided on the order, and (8) the signature of the proper official. The omission of any one of these requirements invalidates the order, and if such order were accepted, the conductor would have to return to the telegraph office to have the omission supplied, thereby losing valuable time.

57. Keeping Record of Orders Issued.—Each train order must be written in full in a book provided for the purpose at the office of the person issuing the order, and with it recorded (1) the names of those that have signed for the order; (2) the time and the signals, which show when and from what offices the order was repeated; (3) the responses transmitted; and (4) the train dispatcher's initials. These records must be made *at the time* and never subsequently from memory or memoranda. This injunction refers to the method of keeping

the records in the office of the officer that is responsible for issuing the orders.

Rule 216 makes provision for the train orders that are issued by the dispatcher personally to those that are to execute them.

58. Wording of Orders.—Regular trains will be designated in train orders by their numbers, as "No. 10," or "2d No. 10," adding engine numbers, if desired. Extra trains will be designated by engine numbers, as "Extra 798," with the direction when necessary, as "East" or "West"; other numbers and the time will be stated in figures only. It is still customary on many roads when a number is given in words, to follow the word with the same number in figures, as a precaution to avoid mistakes in reading the numbers.

59. Transmitting the Orders.—To transmit a train order, the signal "31," or "19" as the case may be, must be given to each office addressed, the number of copies being stated if more or less than three; thus, "31 copy 5," or "19 copy 2." Where forms "31" and "19" are not both in use, the signal may be omitted. This is a notice to the operator of the form of order to be used and the number of copies he should make at the same time. As three is the usual number to be made at one time (one for the conductor, one for the engineman, and one to be kept by the operator), when this number is required, it is not necessary to state it in the notice from the dispatcher to the operator, thus saving the telegraphing of a word.

A train order that is to be sent to two or more offices must be transmitted simultaneously to as many of them as practicable; this not only saves time and the use of the wire but it is also an element of safety, as all the operators get the same order. The several addresses must be in the order of superiority of trains, each office taking its proper address and writing it in the proper place at the top of the order blank. When not sent simultaneously to all, the order must be sent first to the superior train; sometimes it is impossible to get all the offices at once, in which case the superior train must have its orders sent first.

This is in accordance with one of the cardinal principles of moving trains by telegraph, namely, that the superior train must be first advised of any change in its rights, and after its response is on record in the dispatcher's book, inferior trains can then be given orders.

Operators receiving train orders must write them "in manifold" during transmission. If they cannot at one writing make the requisite number of copies, they must trace others from one of the copies first made, so as to insure that the second lot of orders are exact duplicates of the first one.

When a "31" train order has been transmitted, operators must (unless otherwise directed) repeat it at once from the manifold copy in the succession in which the several offices have been addressed, and then write the time of repetition on the order. Each operator receiving the order should observe whether the others repeat correctly. When the order is repeated and the exact time indorsed on the order, it should be presented to those (except enginemen) to whom the order is addressed, who will then read it aloud to the operator to make sure that it is understood. It is to be signed as a notice and record that it is understood, and when these signatures, preceded by the number of the order, are sent to the proper officer, the response "complete" will be given by the train dispatcher, which is his notice that the order is recorded and ready for execution. The operator then writes the word "complete" on the order, and indorses it with his own name and the exact time. It is now ready to be delivered to the persons that are to execute it, each person addressed being entitled to a correct and legible copy. The copy for the engineman must be delivered to him personally by the man in charge of the train, and it is a safe provision to require the engineman to read it out loud to the person that gives it to him. The rules of different roads vary as to the duties of the engineman; some require him to sign the orders personally, while others have the conductor or pilot sign them. The blank form of train orders in use on each road specifies who shall sign these orders and at what places on the form, by providing a place and indicating whose name must appear there.

60. Preparing Form 19.—The manner in which a "Form 19" order is to be prepared for delivery may be minutely detailed as follows: When a Form 19 train order has been transmitted, operators must (unless otherwise directed) repeat it at once from the manifold copy, in the succession in which the several offices have been addressed. Each operator receiving the order should observe whether the others repeat correctly. When the order has been repeated correctly by an operator, the response "complete," the time, and the initials of the official will be given by the train dispatcher. The operator receiving this response will then write on each copy the word "complete," the time, and his last name in full, and personally deliver a copy to each person addressed without taking his receipt for it. You will notice that Form 19 does not require the signature of the conductor but only that of the operator, who can deliver it to the conductor and engineman without any further signature, or without their reading it back to him. From this you will note that Form 19 order is not as important as Form 31 order, as it is used for movements that the train dispatcher from his record knows can be safely made without the use of Form 31. There is such a variance in opinion as to the safe use that can be made of the Form 19 that we would advise the student that is in active railway service to carefully study the methods of the company employing him.

It is sometimes considered desirable for the receipt of an order to be acknowledged by the operator to the dispatcher without repeating back. Rule 212 provides for this, as it says that a train order may, when so directed by the train dispatcher, be acknowledged without repeating, by the operator responding as follows: "X; _____(Number of Train Order)_____ to _____(Train Number)_____," with the operator's initials and office signal. The operator must then write on the order his initials and the time.

In no case must the word *complete* be given to a train order for delivery to an inferior train until it is certain that the order for the superior train has been repeated back to the dispatcher, or that the "X" response mentioned in Rule 212 has been sent by the operator that is charged with the duty of delivering

orders to the superior train; in other words, the superior train must be held first, before the inferior train can proceed.

61. Non-Completion of Order.—It sometimes happens that, after the train order has been repeated or the "X" response has been given, the word "complete" cannot be sent to the operator, in which case the order is not made complete. In such a case, after the order is repeated or "X" given, the order is a holding order for that train. If the wire is down, this will result in tying up that train, but it is the only safe plan, as on the "X" response or the repeating of the order, a train is held and cannot proceed until the order is completed. But in case the wire fails after the order is sent, and before the "X" response is given, or before it has been repeated back to the dispatcher, then this order has not arrived at the stage when it has any effect either as a holding order or as a running order; therefore, it has no effect at all. Just how the operator will notify the train thus held that the order is in this condition is a matter each company settles for itself; but a clearance card made out in the proper form, stating the case, should be sufficient warrant for the train to proceed. As the student will perceive later, the train-order signal has by this time been displayed to stop the train, and is probably out at the time it is definitely settled that the wire has failed; what the train needs in this case is some authority to proceed after being stopped by the fixed signal.

62. Duplicates of Order.—It is provided when issuing train orders that the operator shall retain and preserve the lowest copy. The copies on top are usually the plainest and the train crew is entitled to them. As a portion of the carbon sheet is transferred by the pressure of the stylus to the tissue paper if the carbons are not good, the duplicate copies will not be perfect.

When the train dispatcher delivers train orders personally, the orders are made out precisely as when delivered at any other office. It is further provided that such orders must be first written in manifold, so as to leave an impression in the the record book from which transmission shall be made.

63. Delivery of Order at a Non-Telegraph Station. A train order that is to be delivered to a train at a point that is either not a telegraph station or at which the telegraph office is closed, must be addressed to "C and E_____(at_____), care of_____," and forwarded and delivered by the conductor or other person in whose care it is addressed. When Form 31 is used, "complete" will be given upon the signature of the person by whom the order is to be delivered, and this person must be supplied with copies for the conductor and engineman addressed, and also the copy upon which he shall take their signatures. This copy he must deliver to the first operator accessible, who must preserve it and at once transmit the signatures of the conductor and engineman to the train dispatcher. This prescribes that three copies must be taken by the person that is charged with the duty of delivering the order to the train mentioned, one copy for the conductor and one for the engineman; each of these men must compare the orders and sign for them on the third copy, which is the record for the messenger that has delivered the orders. He should require each person to whom the order is delivered to read it aloud to him, at the same time comparing it with the copy in his possession upon which their signatures are obtained. He should also see that the order is understood alike by those concerned in its execution. This messenger then notifies the train dispatcher at the next open telegraph office that the trainmen understand and will act on the order; their signatures are evidence of this. Orders so delivered must be acted on as if "complete" had been given in the usual manner.

For orders that are sent to a train in the manner herein provided, the superiority of which train is thereby restricted, "complete" must not be given to an inferior train until the signature of the conductor of the superior train has been sent to the proper officer. This is the same precaution that is taken with any form of train orders in which the rights of trains are changed.

64. Meaning of Word "Train" in an Order.—When a train is named in a train order, all its sections are included,

unless particular sections are specified; and each section included must have copies addressed and delivered to it. For instance: If you have an order to meet a train by its number, and if, on its arrival, this train is found to be carrying signals for a following section, then your order will require you to meet all sections of that train at the same place, because the order specified the train by its number, which includes all sections. If, however, the order specifies particular sections of a train, only those particular sections need be looked out for, unless it is a superior train. In the meeting orders for the sections, each one specified therein must have copies addressed to it and delivered to it. The movement of trains under the authority of signals carried for them by preceding trains may at first seem a little complicated, but if the true principle on which these trains derive their authority is studied out, there need be no complication.

65. Giving the "X" Response.—Unless otherwise directed, an operator must not repeat or give the "X" response to a train order for a train the engine of which has passed his train-order signal, until he has ascertained that the conductor or engineman has been notified that he has orders for them; for if the engine has once passed the train-order signal set at "proceed," it is possible that the engineer may not be able to see this signal again.

Repeating the order or giving the "X" response is a notice to the dispatcher that the train is being held, or that the signal is set to "stop" before the arrival of the train and the passage of the engine by the stop-signal. It is customary to get the signature of the conductor to the order *after* he has ascertained beyond a doubt that the engineer is advised that the train is held.

66. Life of Train Order.—Train orders once in effect continue so until fulfilled, superseded, or annulled. Any part of an order specifying a particular movement may be either superseded or annulled. When a regular train loses both right and class (by Rules 4 and 82), the orders held by, or issued for, that train become void; in other words, that train is annulled or outlawed.

According to this rule, train orders issued to an extra train are, unless they have some time limitation, good until fulfilled, even if they run over until another day. Of course, the officer having authority to issue a train order can at any time supersede or annul any part of the order, the rest of it remaining in effect; in the case of a train order issued to a regular train, there is a time limitation implied that becomes effective when the train loses right and class, as provided by Rule 82. When these train orders become void for this train, they are also void for all trains affected by them, and other trains can proceed.

67. Fulfilling, Superseding, or Annulling an Order. Train orders remain in force until *fulfilled*, *superseded*, or *annulled*. **An order is fulfilled** when the purpose for which it was issued is accomplished. For instance, an order is issued stating that "No. 1 will meet No. 2 at A." The order is fulfilled when both trains have arrived at that place. **An order is superseded** when its provisions are changed before it is fulfilled. For instance, Nos. 1 and 2 have the following order: "No. 1 will meet No. 2 at A." This may be suspended by the following: "No. 1 will meet No. 2 at B instead of A." A portion of an order may be superseded in this manner, leaving the remaining portion still in effect. **An order is annulled** by the issuing of a subsequent order stating that order No. (giving its number) is annulled. When an order has been superseded or annulled, it cannot be restored under its original number.

68. Rule 221.—Forms of the rule that relates to train-order signals are given in the Standard Code. See Rule 221, page 68. **Form A** of this rule states that a fixed signal must be used at each train-order office, which shall indicate "stop" when there is an operator on duty, except when changed to "proceed" in order to allow a train to pass after getting its orders, or for which there are no orders. A train must not pass the signal while "stop" is indicated. The signal must be returned to "stop" as soon as the train has passed. It must be fastened at "proceed" when no operator is on duty. Operators must have the proper appliances for hand-signaling ready for immediate use in case the fixed signal should fail to

work properly. If a signal is not displayed at a night office, trains that have not been notified must stop and ascertain the cause, and report the facts to the proper officer from the next open telegraph office.

69. When the semaphore is used, the arm indicates "stop" when horizontal and "proceed" when in an inclined position. This provides that the normal position of the signal must be "stop" at all times when an operator is on duty. If the train is to proceed without getting orders, the operator will change the position of signal to "proceed," and the signal must also be changed after the orders—if any—have been delivered. This form insures that unless the operator changes the signal to allow the train to pass, all trains will come to a stop. The conditions that affect trains at stations vary so much that each road adopts such regulations supplementary to this rule as may best suit its own requirements.

70. **Form B** of Rule 221 arranges for a different method, by which the normal position of the signal shall be at "proceed." The rules state that at each train-order office a fixed signal must be used, which shall indicate "stop," when trains are to be stopped for train orders, and indicate "proceed" when there are no orders.

When an operator receives the signals "31" or "19," he must immediately display the "stop-signal" and then reply "stop displayed"; and until the orders have been delivered or annulled, the signal must not be restored to "proceed." While "stop" is indicated, trains must not proceed without a clearance card, for which a form is provided by the Standard Code, or by orders properly made out, or both clearance and orders. The rules of some roads require trains to obtain a clearance on the prescribed form in addition to train orders when the stop-signal is displayed.

71. **Keeping Record of Train Movements.**—In order that the train dispatcher may be informed of the exact whereabouts of all trains, a record of their movement must be kept showing their departure, and, in the case of extra trains, their direction also. Rule 222 explicitly states that operators will

promptly record and report to the proper officers the time of departure of all trains and the direction of extra trains. They will record the time of arrival of trains and report it when so directed.

Messages and train orders crowd each other so close on a busy wire that brevity is a very important consideration. Many signs and abbreviations are used that are officially sanctioned, so that all concerned are acquainted with their exact meaning. Those provided in the Standard Code are:

C & E—for Conductor and Engineman.
X—Train will be held until order is made "complete."
Com—for Complete.
O S—Train Report.
No—for Number.
Eng—for Engine.
Sec—for Section.
Psgr—for Passenger.
Frt—for Freight.
Mins—for Minutes.
Jct—for Junction.
Dispr—for Train Dispatcher.
Opr—for Operator.
31 or 19—to clear the line for Train Orders, and for Operators to ask for Train Orders.
S D—for "Stop Displayed."

Usual abbreviations for the names of the months and stations.

Initials for signature of the Superintendent, by whom such office and other signals are arranged.

Other abbreviations are used by the different roads, as may seem to them desirable.

GENERAL NOTE.—The forms of train orders will be found on page 70.

FORMS OF ORDERS.

72. Form A.—This form simply designates a meeting point for the two trains named, and is fulfilled when the trains have arrived at the point designated. It gives a train of inferior right (named in the order) the right over the other train (also named) to the point designated, and the train of superior right

must remain at that point for the other train unless the order is superseded or annulled.

73. Form B.—This form provides for a train to pass or run ahead of another train that, under the rules, it has no right to pass or run ahead of. The train to be passed should proceed to the designated point and there arrange to allow the other train to pass with as little delay as possible. When this form is used, the leading train should keep close watch for the following train and arrange to let it pass without delay when overtaken by it.

74. Form C.—This form is practically a reversal of the rights given to one train over another by the rules. Under the rules, No. 2 East may have the right over No. 1 West; but under the operation of this form, as shown in example 1, page 71, the rights would be reversed and No. 1 would have the right over No. 2 between the points named in the order, and No. 2 must clear the time of No. 1 between those points as many minutes as No. 1 must clear No. 2 when the trains are running upon the rights given by the schedule. If the trains are of the same class and the rules provide for variation, No. 1 must observe it the same as No. 2 would be required to do under the rules. If the trains named are not of the same class, and No. 2 is of superior class to No. 1, No. 2 will, under the operation of this form (see example 1, page 71), be required to clear the time of No. 1 as many minutes as No. 1 is required by the rules to clear the time of No. 2. Under this form, No. 2 may, upon arrival at the station last named in the order, proceed, if it can do so and clear the time of No. 1, as provided; but the conductor must stop No. 1 when they meet and notify it of his arrival. If No. 2 reaches the station first named in the order before meeting No. 1, it can proceed in accordance with rights given by the schedule. If No. 1 has not met No. 2 on arriving at the station last named in the order, and no further orders are received, the train must be governed by the schedule, which, if on single track, would require them to take side track and wait for No. 2.

Example 2, page 71, is used to give an extra train the right over another train to a given point. Under its operation, the

second named train must not pass the station last named until the extra has arrived, for the extra train has no schedule by which the opposing train can be governed.

Example 3, page 72, is designed to give a certain train the right over all trains between designated points, either indefinitely or until a specified time shown in the order, and other trains must not go within those limits until the order is annulled or its time limit expired.

75. Form D.—This form is used to give regular trains the right over another regular train named in the order, and the train over which the other trains are given the right must clear the time of all regular trains the same as if it were an extra train. It will thus be seen that this form of order takes away the schedule rights of the train over which regular trains are given the right, making it an extra train so far as the right to move is concerned. This train will not carry white signals, however.

76. Form E.—A train order issued under this form is simply an extension of the schedule of the train whose right is restricted by the order.

Under examples 1 and 2, page 73, the train named in the order must not run between the stations named in the order a less number of minutes late than is specified in the order, and any other train receiving the order can run upon the later schedule as shown in the train order, the same as it was before permitted to run upon the time-table schedule.

The subject of allowing for variation of watches (a practice still retained by companies using the Standard Code), while working under this form of order, and where the opposing trains are of the same class, should be clearly defined and understood. For instance, suppose that No. 2 is due to leave A at 10:30 A. M., and receives the following order: "No. 2 will run 1 hour late A to D." No. 1 is a train of the same class going in the opposite direction, and is due at A at 11:25 A. M. Should No. 2 wait at A the usual time required for variation of watches if No. 1 has not arrived at 11:30 A. M.? At the schedule meeting point of these trains No. 1 has the right of

track up to the leaving time of No. 2, and if No. 1 does not arrive on time, No. 2 must wait the required time for variation before proceeding. The same principle will hold good in the case just referred to. No. 2, due to leave at 10:30 A. M., with an order to run 1 hour late A to D, cannot leave A before 11:30 A. M.; and No. 1, a train of the same class going in the opposite direction, due at A at 11:25 A. M., and holding the same order, has the right of track to that place against No. 2 until 11:30 A. M. It should therefore be understood that a train receiving an order to run late must wait the required time for variation of watches, as prescribed by the rules of the road upon which the train is running, in addition to the time prescribed in the order, when the schedule time of a train of the same class going in the opposite direction is met.

Under example 3, page 73, the same principle of variation and clearance prevails. If No. 2 receives an order as follows, "No. 2 will wait at A until 11:30 A. M. for No. 1," it would have to wait the required time for variation if No. 1 failed to arrive by the time prescribed in the order, the trains being of the same class. If, however, the order given to No. 2 requires it to wait until 11:30 A. M. for an inferior train, the latter must clear the specified time the same as it is required under the rules to clear the schedule time of No. 2, and the latter may go at the expiration of the time specified in the order, whether the other train has arrived or not.

77. Form F.—There is but little that can be said in explanation of this form, which deals with the running of trains in sections. The essential point in the movement of trains in this manner is a thorough understanding of the rights of trains running in sections and a proper observance of signals carried by trains, which points have been dealt with elsewhere. This form adds to the number of regular trains to be met. If you meet all the added trains the same as if they were on the printed time-table, there should be no chance of going astray, as the time-table provides for the meeting points of the other regular trains, whether they come behind or between the sections that are running under signals carried by preceding sections.

A green signal is expected to give the same time-table rights to following sections as the first section has, and no more. The rule in regard to this right, which was formerly in the Standard Code, said: "Two green flags by day and night, and, in addition, two green lights by night, displayed in the places provided for that purpose on the front of an engine, denote that the train is followed by another train, running on the same schedule and entitled to the same time-table rights as the train carrying the signals." This rule has been changed to Rule 20. Rules 95, 96, and 218 also speak of this matter.

78. Form G.—This form provides for the movement of trains not shown upon the time-tables, and the explanations given in the book of rules are so plain that nothing can be added. See Rules 81, 86, 87, 88, and 89.

79. Form H.—This form is used for moving work trains, and other trains affected by them, over work-train limits. Under example 1, the work-extra receiving the order has the right of track between the stations named in the order, keeping clear of regular trains (as provided in the rules) until the expiration of the time specified in the order, at which time they should be out of the way and clear of the main track. Example (*a*), page 75, is similar, except that it provides for the running of the work-extra from one specified point to another and for working between the last-named point and another point mentioned in the order until a specified time. This form gives the right to run from the first point to the second point, and to work between that point and the third point, keeping clear of regular trains as provided in the rules. This order will not permit the work-extra to stop between the two stations first named, without protection required by the rules. If example (*b*), page 75, is added to the above, the work-extra must, after the time named, keep clear of, or protect against, the extra train named in the order, as the order may require. If the order requires the work-extra to keep clear of the extra train, it must be out of the way strictly at, or before, the time named in the order. If the order requires the work-extra to protect against the extra train, the flagman must be out a sufficient

distance with proper signals, as required by the rules, at or before the time named in the order. The extra train receiving this order must not go within the limits named in the order until the time has expired, unless the work-extra should be met at the station, which defines the limits of its working order. If the order states that the work-extra is protecting itself against the extra train, the latter must proceed with caution, keeping a close lookout for flagmen. On roads whose rules require allowance of time for variation on time orders, the extra train shall observe such time as the rules require before passing within the limits of the work-extra. When an extra train is given an order to protect itself against a work-extra, as in example (*c*), page 76, it must be carefully protected by flagmen, as required by the rules, expecting to find the work-extra moving in either direction without protection. When a work-extra is given an order to protect itself, as in example (*d*), page 76, it must protect itself in both directions at all times as required by the rules. Example (*e*), page 76, gives the work-extra the right to work upon the time of the regular train named in the order, by protecting itself as required by the rules; and the regular train must proceed with caution over the limits of the work-extra, expecting to find it.

For the safe movement of other trains over the limits of a work-extra, the two essential things are adequate protection on the part of those on whom the duty of protection is placed, and the exercise of extreme caution on the part of those in charge of other trains. With these requirements faithfully observed, the movement can be made with absolute safety, while if they are neglected it is attended with great danger.

80. Form J.—This form is used for holding a train or trains at any station for any purpose that may be deemed necessary. *Holding orders* are addressed to the operator, but must be respected and observed by conductors and enginemen as if addressed to them. When a train is held by an order in this form, it cannot proceed until the order to hold is annulled (this annulling order will be addressed to the operator), or an order is received (addressed to the operator) stating that the train

may go. Although these orders are addressed to the operator in this form J, trainmen and enginemen will respect them the same as if addressed to them.

No matter how many orders the train may have received at such a station, these other orders do not release it from the order to hold. This fact should be kept clearly in mind, as meeting orders are very apt to be sent to such trains while being thus held, and if acted on as a release from the order to hold, an accident might result.

81. Form K.—This form is used for annulling a regular train. When a train is annulled over any portion of the line, other trains will be run the same as if the train annulled were not shown on the time-table. If example (1), page 77, is used for the annulling order, employes should have a thorough understanding in regard to it, as different interpretations are placed upon it by different roads. For example, if No. 1 is due to leave its initial point on the first division at 10:00 P. M. and is to pass to the second division at 2:00 A. M., it would start upon its trip on the latter division on another date. If the stations (shown in the train order) between which the train is annulled are on the second division, the question arises: Would the date shown in the order upon which the train is annulled be the date upon which it starts from its initial point on the first division, or is it the date upon which it leaves its initial point in the second division—the division upon which the annulling order is given? This is a matter that should be clearly defined and understood by all concerned according to the rules of their particular road. Example (2), page 77, is preferable, as it is clearer in meaning, more easily understood, and not susceptible to different interpretations. Example (1), page 77, is plain enough on a road of only one division.

82. Form L.—This form is used for annulling a train order; and an order annulled in this manner will be considered the same as if it had not been sent. For example, if No. 1 has order No. 9 stating that "No. 1 will meet No. 2 at A" and is subsequently given an order stating that "Order No. 9 is

annulled," No. 1 will proceed upon the rights given by the schedule or other orders in its possession. As the order annulled is designated by its number, the essential point is to see that the number shown in the annulling order agrees with the number of the order in possession of the trainmen by whom the annulling order is received. This is particularly important when there is more than one order in the possession of the trainmen.

83. Form M.—This form is used to annul part of an order, the part annulled being specified in the annulling order. The balance of the order remains in force until fulfilled, superseded, or annulled by subsequent order.

84. Form P.—This form is used for superseding an order or a part of an order, and the superseding order will take the place of the former order or that particular part of it to which it refers. If the order supersedes a part of an order only, the remaining portion will continue in force until fulfilled, superseded, or annulled by subsequent order.

85. Clearance Card.—The clearance card is used to release trains for which there are no orders when the train-order signal is displayed at a telegraph station. Upon some roads, trains are required to receive a clearance card in addition to any orders that may be received. The clearance card should (1) be correctly dated, (2) designate the train to which it is issued, (3) show for what train or trains the train-order signal is displayed, (4) show that there are no further orders for the train to which it is issued, and (5) be signed with the full name of the operator. There is equally as much depending on the proper use of the clearance card as upon train orders, and their use should therefore be well guarded.

THE STANDARD CODE

OF THE

AMERICAN RAILWAY ASSOCIATION.

TRAIN RULES. SINGLE TRACK.

ADOPTED APRIL 12, 1899.

(*Form of order putting rules into effect.*)

The rules herein set forth govern the railroads operated by the.....Company. They take effect .....superseding all previous rules and instructions inconsistent therewith.

Special instructions may be issued by proper authority.

(Name).....

(Title) .....

GENERAL NOTICE.

To enter or remain in the service is an assurance of willingness to obey the rules.

Obedience to the rules is essential to the safety of passengers and employes, and to the protection of property.

The service demands the faithful, intelligent and courteous discharge of duty.

To obtain promotion capacity must be shown for greater responsibility.

Employes, in accepting employment, assume its risks.

GENERAL RULES.

A. Employes whose duties are prescribed by these rules must provide themselves with a copy.

B. Employes must be conversant with and obey the rules and special instructions. If in doubt as to their meaning they must apply to proper authority for an explanation.

C. Employes must pass the required examinations.

D. Persons employed in any service on trains are subject to the rules and special instructions.

E. Employes must render every assistance in their power in carrying out the rules and special instructions.

F. Any violation of the rules or special instructions must be reported.

G. The use of intoxicants by employes while on duty is prohibited. Their habitual use, or the frequenting of places where they are sold, is sufficient cause for dismissal.

H. The use of tobacco by employes when on duty in or about passenger stations, or on passenger cars, is prohibited.

J. Employes on duty must wear the prescribed badge and uniform and be neat in appearance.

K. Persons authorized to transact business at stations or on trains must be orderly and avoid annoyance to passengers.

L. In case of danger to the Company's property employes must unite to protect it.

DEFINITIONS.

TRAIN.—An engine, or more than one engine coupled, with or without cars, displaying Markers.

REGULAR TRAIN.—A train represented on the Time-table. It may consist of Sections.

SECTION.—One of two or more trains running on the same schedule displaying signals or for which signals are displayed.

EXTRA TRAIN.—A train not represented on the Time-table. It may be designated as—

Extra—for any extra train, except work extra;

Work extra—for work train extra.

SUPERIOR TRAIN.—A train having precedence over other trains.

A train may be made superior to another train by RIGHT, CLASS or DIRECTION.

RIGHT is conferred by train order; CLASS and DIRECTION by time-table.

RIGHT is superior to CLASS or DIRECTION. DIRECTION is superior as between trains of the same class.

TRAIN OF SUPERIOR RIGHT.—A train given precedence by train order.

TRAIN OF SUPERIOR CLASS.—A train given precedence by time-table.

TRAIN OF SUPERIOR DIRECTION.—A train given precedence in the direction specified in the Time-table as between trains of the same class.

TIME-TABLE.—The authority for the movement of regular trains subject to the rules. It contains the classified schedules of trains with special instructions relating thereto.

SCHEDULE.—That part of a Time-table which prescribes the class, direction, number and movement of a regular train.

SINGLE TRACK.—A track upon which trains are operated in both directions by time-table or by train orders.

SIDING.—An auxiliary track for meeting or passing trains.

YARD.—A system of tracks within defined limits provided for the making up of trains, storing of cars and other purposes, over which movements not authorized by time-table, or by train order, may be made, subject to prescribed signals and regulations.

YARD ENGINE.—An engine assigned to yard service and working within yard limits.

PILOT.—A person assigned to a train when the engineman or conductor, or both, are not fully acquainted with the physical characteristics, or running rules of the road, or portion of the road, over which the train is to be moved.

RULES FOR SINGLE TRACK.

STANDARD TIME.

1. Standard Time obtained from ———————— observatory will be telegraphed to all points from designated offices at ——, — m., daily.

NOTE TO RULE 1.—In order to detect possible errors at junction points and to secure uniformity, the Committee recommends that the time be disseminated to all points at the same hour. The Committee considers it of great importance that the time be obtained from some observatory of recognized standing.

2. Watches that have been examined and certified to by a designated inspector must be used by conductors and enginemen. The certificate in prescribed form must be renewed and filed with ——— every ———.

(*Form of Certificate.*)

CERTIFICATE OF WATCH INSPECTOR.

This is to certify that on ..... 19 .....
the watch of .....
employed as .....
on the ..... R .....
was examined by me. It is correct and reliable, and in my judgment will, with proper care, run within a variation of thirty seconds per week.

Name of Maker .....
Brand .....
Number of Movement .....
Open or hunting case .....
Metal of case .....
Stem or key winding .....

Signed,

.....
Inspector.

Address .....

3. Watches of conductors and enginemen must be compared, before starting on each trip, with a clock designated as

a Standard Clock. The time when watches are compared must be registered on a prescribed form.

NOTE TO RULE 3.—The conditions under which conductors and enginemen whose duties preclude access to a standard clock are required to obtain standard time, vary so much on different roads that the Committee recommends that each adopt such regulations to cover the case supplementary to this rule, as may best suit its own requirements.

TIME-TABLES.

4 (A). Each Time-table, from the moment it takes effect, supersedes the preceding Time-table.

A train of the preceding Time-table thereupon loses both right and class, and can thereafter proceed only by train order.

No train of the new Time-table shall run on any division until it is due to start from its initial point, on that division, after the Time-table takes effect.

4 (B). Each Time-table, from the moment it takes effect, supersedes the preceding Time-table. A train of the preceding Time-table shall retain its train orders and take the schedule of the train of the same number on the new Time-table.

A train of the new Time-table which has not the same number on the preceding Time-table shall not run on any division until it is due to start from its initial point, on that division, after the Time-table takes effect.

NOTE TO RULES 4 (A) AND 4 (B).—The Committee has recommended two forms of Rule 4, leaving it discretionary with each road to adopt either, as best suits its own requirements.

5. Not more than two times are given for a train at any point; where one is given, it is, unless otherwise indicated, the leaving time; where two, they are the arriving and the leaving time.

Schedule meeting or passing points are indicated by figures in **full-faced type.**

Both the arriving and leaving time of a train are in full-faced type when both are meeting or passing times, or when one or more trains are to meet or pass it between those times.

Where there are one or more trains to meet or pass a train

between two times, or more than one train to meet a train at any point, attention is called to it by ——.

NOTE TO RULE 5.—The Committee recommends that each company adopt such method as it may prefer in filling the blank.

6. The following signs when placed before the figures of the schedule indicate:

"s"—regular stop:

"f"—flag stop to receive or discharge passengers or freight:

"¶"—stop for meals:

"l"—leave:

"a"—arrive.

SIGNAL RULES.

7. Employes whose duties may require them to give signals, must provide themselves with the proper appliances, keep them in good order and ready for immediate use.

8. Flags of the prescribed color must be used by day, and lamps of the prescribed color by night.

9. Night signals are to be displayed from sunset to sunrise. When weather or other conditions obscure day signals, night signals must be used in addition.

VISIBLE SIGNALS.

10. COLOR SIGNALS.

COLOR.	INDICATION.
(*a*) Red.	Stop.
(*b*) ———	Proceed, and for other uses prescribed by the Rules.
(*c*) ———	Proceed with caution, and for other uses prescribed by the Rules.
(*d*) Green and white.	Flag stop. See Rule 28.
(*e*) Blue.	See Rule 26.

NOTE TO RULE 10.—The Committee has omitted giving the colors of signals (*b*) and (*c*) in Rule 10, leaving it discretionary with each road to use such colors as it may prefer.

11. A fusee on or near the track burning red must not be passed until burned out. When burning green it is a caution signal.

12. HAND, FLAG AND LAMP SIGNALS.

MANNER OF USING.	INDICATION.
(*a*) Swung across the track.	Stop.
(*b*) Raised and lowered vertically.	Proceed.
(*c*) Swung vertically in a circle across the track, when the train is standing.	Back.
(*d*) Swung vertically in a circle at arm's length across the track, when the train is running.	Train has parted.
(*e*) Swung horizontally in a circle, when the train is standing.	Apply air brakes.
(*f*) Held at arm's length above the head, when train is standing.	Release air brakes.

13. Any object waved violently by any one on or near the track is a signal to stop.

AUDIBLE SIGNALS.

14. ENGINE STEAM WHISTLE SIGNALS.

NOTE.—The signals prescribed are illustrated by "o" for short sounds; "——" for longer sounds. The sound of the whistle should be distinct, with intensity and duration proportionate to the distance signal is to be conveyed.

SOUND.	INDICATION.
(*a*) o	Stop. Apply brakes.
(*b*) —— ——	Release brakes.
(*c*) —— o o o	Flagman go back and protect rear of train.
(*d*) —— —— —— ——	Flagman return from west or south.
(*e*) —— —— —— —— ——	Flagman return from east or north.
(*f*) —— —— ——	When running, train parted; to be repeated until answered by the signal prescribed by Rule 12 (*d*). Answer to 12 (*d*).
(*g*) o o	Answer to any signal not otherwise provided for.
(*h*) o o o	When train is standing, back. Answer to 12 (*c*) and 16 (*c*).
(*j*) o o o o	Call for signals.
(*k*) —— o o	To call the attention of trains of the same or inferior class to signals displayed for a following section.
(*l*) —— —— o o	Approaching public crossings at grade.
(*m*)————	Approaching stations, junctions and railroad crossings at grade.

A succession of short sounds of the whistle is an alarm for persons or cattle on the track, and calls the attention of trainmen to danger ahead.

15. The explosion of one torpedo is a signal to stop; the explosion of two not more than 200 feet apart is a signal to reduce speed; and look out for a stop signal.

16. AIR-WHISTLE OR BELL-CORD SIGNALS.

SOUND.	INDICATION.
(*a*) Two.	When train is standing, start.
(*b*) Two.	When train is running, stop at once.
(*c*) Three.	When train is standing, back the train.
(*d*) Three.	When train is running, stop at next station.
(*e*) Four.	When train is standing, apply or release air brakes.
(*f*) Four.	When train is running, reduce speed.
(*g*) Five.	When train is standing, call in flagman.
(*h*) Five.	When train is running, increase speed.

TRAIN SIGNALS.

17. The head-light will be displayed to the front of every train by night, but must be concealed when a train turns out to meet another and has stopped clear of main track, or is standing to meet trains at the end of double track or at junction points.

18. Yard engines will display the head-light to the front and rear by night. When not provided with a head-light at the rear, two white lights must be displayed. Yard engines will not display markers.

19. The following signals will be displayed, one on each side of the rear of every train, as markers, to indicate the rear of the train: By day, a green flag. By night, a green light to the front and side and a red light to the rear, except when the train turns out to be passed by another and is clear of main track, when a green light must be displayed to the front, side and to rear.

20. All sections of a train, except the last, will display two green flags and, in addition, two green lights by night, in the places provided for that purpose on the front of the engine.

21. Extra trains will display two white flags and, in addition, two white lights by night, in the places provided for that purpose on the front of the engine.

22. When two or more engines are coupled to a train, the leading engine only shall display the signals as provided in Rules 20 and 21.

23. One flag or light displayed where in Rules 19, 20 and 21 two are prescribed will indicate the same as two; but the proper display of all train signals is required.

24. When cars are pushed by an engine (except when shifting or making up trains in yards) a white light must be displayed on the front of the leading car by night.

25. Each car on a passenger train must be connected with the engine by a communicating signal appliance.

26. A blue flag by day and a blue light by night, displayed at one or both ends of an engine, car or train, indicates that workmen are under or about it. When thus protected it must not be coupled to or moved. Workmen will display the blue signals and the same workmen are alone authorized to remove them. Other cars must not be placed on the same track so as to intercept the view of the blue signals, without first notifying the workmen.

USE OF SIGNALS.

27. A signal imperfectly displayed, or the absence of a signal at a place where a signal is usually shown, must be regarded as a stop signal, and the fact reported to the ——.

28. The combined green and white signal is to be used to stop a train only at the flag stations indicated on the schedule of that train. When it is necessary to stop a train at a point that is not a flag station for that train, a red signal must be used.

29. When a signal (except a fixed signal) is given to stop a train, it must be acknowledged as provided in Rule 14 (*g*).

30. The engine-bell must be rung when an engine is about to move.

31. The engine-bell must be rung on approaching every public road crossing at grade, and until it is passed; and the whistle must be sounded at all whistling-posts.

32. The unnecessary use of either the whistle or the bell is prohibited. They will be used only as prescribed by rule or law, or to prevent accident.

33. Watchmen stationed at public road and street crossings must use red signals only when necessary to stop trains.

CLASSIFICATION OF TRAINS.

81. Trains of the first class are superior to those of the second; trains of the second class are superior to those of the third; and so on. Extra trains are inferior to regular trains of whatever class.

All trains in the direction specified in the Time-table are superior to trains of the same class in the opposite direction.

82. Regular trains twelve hours behind their schedule time lose both right and class, and can thereafter proceed only by train order.

MOVEMENT OF TRAINS.

83. A train must not leave its initial station on any division, or a junction, or pass from double to single track, until it is ascertained whether all trains due, which are superior, or of the same class, have arrived or left.

84. A train leaving its initial station on each division, or leaving a junction, when a train of the same class in the same direction is overdue, will proceed on its schedule, and the overdue train will run as provided in Rule 91.

85. A train must not start until the proper signal is given.

86. An inferior train must keep out of the way of a superior train.

87. A train failing to clear the main track by the time required by rule, must be protected as provided in Rule 99.

88. At meeting points between trains of the same class the inferior train must clear the main track before the leaving time of the superior train, and must pull into siding when practicable. If necessary to back in, the train must first be protected, as per Rule 99, unless otherwise provided.

89. At meeting points between trains of different classes the inferior train must take the siding and clear the superior train at least five minutes, and must pull into the siding when practicable. If necessary to back in, the train must first be protected as per Rule 99, unless otherwise provided.

An inferior train must keep at least five minutes off the time of a superior train in the same direction.

NOTE TO RULES 88 AND 89.—The Committee recommends, that where greater clearance is necessary, Rule No. 88 should require a clearance of FIVE minutes, and Rule No. 89 of TEN minutes.

90. Trains must stop at schedule meeting or passing points, if the train to be met or passed is of the same class, unless the switches are right and the track clear. Trains should stop clear of the switch used by the train to be met or passed in going on the siding.

When the expected train of the same class is not found at the schedule meeting or passing point, the superior train must approach all sidings prepared to stop, until the expected train is met or passed.

91. Trains in the same direction must keep at least five minutes apart, except in closing up at stations or at meeting and passing points.

NOTE TO RULE 91.—The Committee recommends, that where greater clearance is necessary, Rule No. 91 should allow a clearance of TEN minutes or more.

92. A train must not arrive at a station in advance of its schedule arriving time.

A train must not leave a station in advance of its schedule leaving time.

93. A regular train which is delayed, and falls back on the time of another train of the same class, will proceed on its own schedule.

94. A train which overtakes a superior train or a train of the same class, so disabled that it cannot proceed will pass it, if practicable, and if necessary will assume the schedule and take the train orders of the disabled train, proceed to the next open telegraph office, and there report to the ———. The disabled train will assume the schedule and take the train orders of the last train with which it has exchanged, and will when able proceed to and report from the next open telegraph office.

95. A train must not display signals for a following section, nor an extra train be run, without orders from the ———.

96. When signals displayed for a section are taken down at any point before that section arrives, the conductor will, if there be no other provision, arrange with the operator, or if there be no operator, with the switchtender, or in the absence of both, with a flagman left there for the purpose, to notify all opposing trains of the same or inferior class leaving such point that the section for which the signals were displayed has not arrived.

97. Work extras will be assigned working limits.

98. Trains must approach the end of double track, junctions, railroad crossings at grade, and drawbridges, prepared to stop, unless the switches and signals are right and the track is clear. Where required by law, trains must stop.

99. When a train stops or is delayed, under circumstances in which it may be overtaken by another train, the flagman must go back immediately with stop signals a sufficient distance to insure full protection. When recalled he may return to his train, first placing two torpedoes on the rail when the conditions require it.

The front of a train must be protected in the same way, when necessary, by the ———.

100. When the flagman goes back to protect the rear of his train, the ——— must, in the case of passenger trains, and the next brakeman in the case of other trains, take his place on the train.

101. If a train should part while in motion, trainmen must, if possible, prevent damage to the detached portions. The signals prescribed by Rules 12 (*d*) and 14 (*f*) must be given, and the front portion of the train kept in motion until the detached portion is stopped.

The front portion will then go back, to recover the detached portion, running with caution and following a flagman. The detached portion must not be moved or passed until the front portion comes back.

102. When cars are pushed by an engine (except when shifting and making up trains in yards) a flagman must take a conspicuous position on the front of the leading car and signal the engineman in case of need.

103. Messages or orders respecting the movement of trains or the condition of track or bridges must be in writing.

104. Switches must be left in proper position after having been used. Conductors are responsible for the position of the switches used by them and their trainmen, except where switch-tenders are stationed.

A switch must not be left open for a following train unless in charge of a trainman of such train.

105. Both conductors and enginemen are responsible for the safety of their trains and, under conditions not provided for by the rules, must take every precaution for their protection.

106. In all cases of doubt or uncertainty the safe course must be taken and no risks run.

RULES FOR MOVEMENT BY TRAIN ORDERS.

201. For movements not provided for by Time-table, train orders will be issued by authority and over the signature of the ——. They must contain neither information nor instructions not essential to such movements.

They must be brief and clear; in the prescribed forms when applicable; and without erasure, alteration or interlineation.

202. Each train order must be given in the same words to all persons or trains addressed.

203. Train orders will be numbered consecutively each day, beginning with No. — at midnight.

204. Train orders must be addressed to those who are to execute them, naming the place at which each is to receive his copy. Those for a train must be addressed to the conductor and engineman, and also to any one who acts as its pilot. A copy for each person addressed must be supplied by the operator.

205. Each train order must be written in full in a book provided for the purpose at the office of the ——; and with it recorded the names of those who have signed for the order; the time and the signals which show when and from what offices the order was repeated and the responses transmitted; and the train dispatcher's initials. These records must be made at once, and never from memory or memoranda.

206. Regular trains will be designated in train orders by their numbers, as "No 10," or "2d No 10," adding engine numbers if desired; extra trains by engine numbers, as "Extra 798," with the direction when necessary, as "East" or "West." Other numbers and time will be stated in figures only.

207. To transmit a train order, the signal "31" or the signal "19" must be given to each office addressed, the number of copies being stated, if more or less than three—thus, "31 copy 5," or "19 copy 2."

NOTE TO RULE 207.—Where forms "31" and "19" are not both in use the signal may be omitted.

208. A train order to be sent to two or more offices must be transmitted simultaneously to as many of them as practicable. The several addresses must be in the order of superiority of trains, each office taking its proper address. When not sent simultaneously to all, the order must be sent first to the superior train.

209. Operators receiving train orders must write them in manifold during transmission and if they cannot at one writing

make the requisite number of copies, must trace others from one of the copies first made.

210. When a "31" train order has been transmitted, operators must (unless otherwise directed) repeat it at once from the manifold copy in the succession in which the several offices have been addressed, and then write the time of repetition on the order. Each operator receiving the order should observe whether the others repeat correctly.

Those to whom the order is addressed, except enginemen, must then sign it, and the operator will send their signatures preceded by the number of the order to the ——. The response "complete," and the time, with the initials of the ——, will then be given by the train dispatcher. Each operator receiving this response will then write on each copy the word "complete," the time, and his last name in full, and then deliver a copy to each person addressed, except enginemen. The copy for each engineman must be delivered to him personally by ——.

NOTE TO RULE 210.—The blanks in the above rule may be filled for each road to suit its own requirements. On roads where the signature of the engineman is desired, the words "except enginemen," and the last sentence in the second paragraph may be omitted. If preferred, each person receiving an order may be required to read it aloud to the operator.

211. When a "19" train order has been transmitted, operators must (unless otherwise directed) repeat it at once from the manifold copy, in the succession in which the several offices have been addressed. Each operator receiving the order should observe whether the others repeat correctly. When the order has been repeated correctly by an operator, the response "complete," and the time, with the initials of the——, will be given by the train dispatcher. The operator receiving this response will then write on each copy the word "complete," the time, and his last name in full, and personally deliver a copy to each person addressed without taking his signature.

212. A train order may, when so directed by the train dispatcher, be acknowledged without repeating, by the operator responding: "X; _____ (Number of Train Order) _____ to _____ (Train Number) _____," with the operator's initials and

office signal. The operator must then write on the order his initials and the time.

213. "Complete" must not be given to a train order for delivery to an inferior train until the order has been repeated or the "X" response sent by the operator who receives the order for the superior train.

214. When a train order has been repeated or "X" response sent, and before "complete" has been given, the order must be treated as a holding order for the train addressed, but must not be otherwise acted on until "complete" has been given.

If the line fails before an office has repeated an order or has sent the "X" response, the order at that office is of no effect and must be there treated as if it had not been sent.

215. The operator who receives and delivers a train order must preserve the lowest copy.

216. For train orders delivered by the train dispatcher, the requirements as to the record and delivery are the same as at other points.

Such orders shall be first written in manifold, so as to leave an impression in the record book, from which transmission shall be made.

217. A train order to be delivered to a train at a point not a telegraph station, or at one at which the telegraph office is closed, must be addressed to

"*C. and E.*——(*at*——), *care of*——,"

and forwarded and delivered by the conductor or other person in whose care it is addressed. When form 31 is used "complete" will be given upon the signature of the person by whom the order is to be delivered, who must be supplied with copies for the conductor and engineman addressed, and a copy upon which he shall take their signatures. This copy he must deliver to the first operator accessible, who must preserve it, and at once transmit the signatures of the conductor and engineman to the train dispatcher.

Orders so delivered must be acted on as if "complete" had been given in the usual way.

For orders which are sent, in the manner herein provided, to a train, the superiority of which is thereby restricted, "complete" must not be given to an inferior train until the signatures of the conductor and engineman of the superior train has been sent to the ——.

218. When a train is named in a train order, all its sections are included unless particular sections are specified, and each section included must have copies addressed and delivered to it.

219. Unless otherwise directed, an operator must not repeat or give the "X" response to a train order for a train, the engine of which has passed his train-order signal, until he has ascertained that the conductor and engineman have been notified that he has orders for them.

220. Train orders once in effect continue so until fulfilled, superseded or annulled. Any part of an order specifying a particular movement may be either superseded or annulled.

Orders held by or issued for a regular train become void when such train loses both right and class as provided by Rules 4 and 82, or is annulled.

221 (A). A fixed signal must be used at each train-order office, which shall indicate "stop" when there is an operator on duty, except when changed to "proceed" to allow a train to pass after getting train orders, or for which there are no orders. A train must not pass the signal while "stop" is indicated. The signal must be returned to "stop" as soon as a train has passed. It must be fastened at "proceed" only when no operator is on duty.

Operators must have the proper appliances for hand signaling ready for immediate use if the fixed signal should fail to work properly. If a signal is not displayed at a night office, trains which have not been notified must stop and ascertain the cause, and report the facts to the —— from the next open telegraph office.

Where the semaphore is used, the arm indicates "stop" when horizontal and "proceed" when in an inclined position.

NOTE TO RULE 221 (A).—The conditions which affect trains at stations vary so much that it is recommended each road adopt such regulations supplementary to this rule as may best suit its own requirements.

221 (B). A fixed signal must be used at each train-order office, which shall indicate "stop" when trains are to be stopped for train orders. When there are no orders the signal must indicate "proceed."

When an operator receives the signal "31," or "19," he must immediately display the "stop signal" and then reply "stop displayed"; and until the orders have been delivered or annulled the signal must not be restored to "proceed." While "stop" is indicated trains must not proceed without a clearance card (Form —— (A)).

Operators must have the proper appliances for hand signaling ready for immediate use if the fixed signal should fail to work properly. If a signal is not displayed at a night office, trains which have not been notified must stop and ascertain the cause, and report the facts to the —— from the next open telegraph office.

Where the semaphore is used, the arm indicates "stop" when horizontal and "proceed" when in an inclined position.

NOTE TO RULES 221 (A) AND 221 (B).—The Committee has recommended two forms of Rule 221, leaving it discretionary to adopt one or both of these forms according to the circumstances of the traffic.

222. Operators will promptly record and report to the —— the time of departure of all trains and the direction of extra trains. They will record the time of arrival of trains and report it when so directed.

223. The following signs and abbreviations may be used:

Initials for signature of the ——.

Such office and other signals as are arranged by the ——.

C & E—for Conductor and Engineman.

X—Train will be held until order is made "complete."

Com—for Complete.

O S—Train Report.

No—for Number.

Eng—for Engine.

Sec—for Section.

Psgr—for Passenger.
Frt—for Freight.
Mins—for Minutes.
Jct—for Junction.
Dispr—for Train Dispatcher.
Opr—for Operator.
31 or 19—to clear the line for Train Orders, and for Operators to ask for Train Orders.
S D—for "Stop Displayed."
The usual abbreviations for the names of the months and stations.

GENERAL NOTE.—Blanks in the rules may be filled by each road to suit its own organization or requirements.

FORMS OF TRAIN ORDERS.

FORM A. FIXING MEETING POINTS FOR OPPOSING TRAINS.

(1.) —— will meet —— at ——.

(2.) —— will meet —— at —— —— at —— (and so on).

EXAMPLES.

(*1.*) *No 1 will meet No 2 at Bombay.*

No 3 will meet 2d No 4 at Siam.

No 5 will meet Extra 95 at Hong Kong.

Extra 652 North will meet Extra 231 South at Yokohama.

(*2.*) *No 1 will meet No 2 at Bombay 2d No 4 at Siam and Extra 95 at Hong Kong.*

Trains receiving these orders will run with respect to each other to the designated points and there meet in the manner provided by the rules.

FORM B. DIRECTING A TRAIN TO PASS OR RUN AHEAD OF ANOTHER TRAIN.

(1.) —— will pass —— at ——.

(2.) —— will pass —— when overtaken.

(3.) —— will run ahead of —— —— to ——.

(4.) —— will pass —— at —— and run ahead of —— to ——.

EXAMPLES.

(*1.*) *No 1 will pass No 3 at Khartoum.*

(*2.*) *No 6 will pass No 4 when overtaken.*

(*3.*) *Extra 594 will run ahead of No 6 Bengal to Madras.*

(*4.*) *No 1 will pass No 3 at Khartoum and run ahead of No 7 Madras to Bengal.*

When under (1) a train is to pass another both trains will run according to rule to the designated point and there arrange for the rear train to pass promptly.

Under (2), both trains will run according to rule until the second-named train is overtaken and then arrange for the rear train to pass promptly.

Under (3), the second-named train must not exceed the speed of the first-named train between the points designated.

FORM C. GIVING A TRAIN THE RIGHT OVER AN OPPOSING TRAIN.

—— has right over —— —— to ——.

EXAMPLES.

(*1.*) *No 1 has right over No 2 Mecca to Mirbat.*

(*2.*) *Extra 37 has right over No 3 Natal to Ratlam.*

This order gives the train first named the right over the other train between the points named.

If the trains meet at either of the designated points, the first-named train must take the siding, unless the order otherwise prescribes.

Under (1), if the second-named train reaches the point last named before the other arrives, it may proceed, keeping clear of the opposing train as many minutes as such train was before required to clear it under the rules.

If the second-named train, before meeting, reaches a point within or beyond the limits named in the order, the conductor must stop the other train where it is met and inform it of his arrival.

Under (2), the regular train must not go beyond the point last named until the extra train has arrived.

When the extra train has reached the point last named the order is fulfilled.

The following modification of this form of order will be applicable for giving a work extra the right over all trains in case of emergency.

(*3.*) *Work extra* —— *has right over all trains between* —— *and* —— *from* —— *m to* —— *m.*

EXAMPLE.

Work Extra 275 has right over all trains between Stockholm and Edinburg from 7 p m to 12 midnight.

This gives the work extra the exclusive right between the points designated between the times named.

FORM D. GIVING REGULAR TRAINS THE RIGHT OVER A GIVEN TRAIN.

Regular trains have right over —— between —— and ——.

EXAMPLE.

Regular trains have right over No 1 between Moscow and Berlin.

This order gives to regular trains receiving it the right over the train named in the order, and the latter must clear the schedule times of all regular trains, as if it were an extra.

FORM E. TIME ORDERS.

(1.) —— will run —— late —— to ——.

(2.) —— will run —— late —— to —— and —— late —— to —— etc.

(3.) —— will wait at —— until —— for ——.

EXAMPLES.

(*1.*) *No 1 will run 20 min late Joppa to Mainz.*

(*2.*) *No 1 will run 20 min late Joppa to Mainz and 15 min late Mainz to Muscat etc.*

(*3.*) *No 1 will wait at Muscat until 10 a m for No 2.*

(1) and (2) make the schedule time of the train named, between the points mentioned, as much later as stated in the order, and any other train receiving the order is required to run with respect to this later time, as before required to run with respect to the regular schedule time. The time in the order should be such as can be easily added to the schedule time.

Under (3), the train first named must not pass the designated point before the time given, unless the other train has arrived. The train last named is required to run with respect to the time specified, as before required to run with respect to the regular schedule time of the train first named.

FORM F. FOR SECTIONS.

—— will display signals —— to —— for ——.

EXAMPLES.

Eng 20 will display signals and run as 1st No 1 London to Paris.

No 1 will display signals London to Dover for Eng 85.

2d No 1 will display signals London to Dover for Eng 90.

This form may be modified as follows:

Engs 70 85 and 90 will run as 1st 2d and 3d No 1.

Engs 70 85 and 90 will run as 1st 2d and 3d No 1 London to Dover.

Under these examples the engine last named will not display signals.

For annulling a section.

Eng 85 is annulled as 2d No 1 from Chatham.

If there are other sections following add:

Following sections will change numbers accordingly.

The character of a train for which signals are displayed may be stated. Each section affected by the order must have copies, and must arrange signals accordingly.

FORM G. EXTRA TRAINS.

(1.) Eng —— will run extra —— to ——.

(2.) Eng —— will run extra —— to —— and return to ——.

EXAMPLE.

(*1.*) *Eng 99 will run extra Berber to Gaza.*

(*2.*) *Eng 99 will run extra Berber to Gaza and return to Cabul.*

A train receiving this order is not required to protect itself against opposing extras, unless directed by order to do so, but must keep clear of all regular trains, as required by rule.

(3.) Eng —— will run extra leaving —— on —— as follows with right over all trains:

Leave ——.

" ——.

Arrive ——.

EXAMPLE.

(*3.*) *Eng 77 will run extra leaving Turin on Thursaay Feb 17th as follows with right over all trains.*

Leave Turin 11 30 p m

" *Pekin 12 25 a m*

" *Canton 1 47 a m*

Arrive Rome 2 22 a m

This order may be varied by specifying the kind of extra and the particular trains over which the extra shall or shall not have the right. Trains over which the extra is thus given the right must clear the time of the extra —— minutes.

FORM H. WORK EXTRA.

(1.) Work extra —— will work —— until —— between —— and ——.

EXAMPLES.

(1.) *Work extra 292 will work 7 a m until 6 p m between Berne and Turin.*

The working limits should be as short as practicable, to be changed as the progress of the work may require. The above may be combined, thus:

(*a.*) *Work extra 292 will run Berne to Turin and work 7 a m until 6 p m between Turin and Rome.*

When an order has been given to "work" between designated points, no other extra shall be authorized to run over that part of the track without provision for passing the work extra.

When it is anticipated that a work extra may be where it cannot be reached for orders, it may be directed to report for orders at a given time and place, or an order may be given that it shall clear the track for (or protect itself after a certain hour against) a designated extra by adding to (1) the following words:

(*b.*) *And will keep clear of (or protect against) Extra 223 south between Antwerp and Brussels after 2 10 p m.*

In this case, extra 223 must not pass the northernmost station before 2 10 p. m., at which time the work extra must be out of the way, or protected (as the order may require) between those points.

When the movement of an extra over the working limits cannot be anticipated by these or other orders to the work extra, an order must be given to such extra, to protect itself against the work extra, in the following form:

(*c.*) *Extra 76 will protect against work extra 95 between Lyons and Paris.*

This may be added to the order to run extra.

A work extra when met or overtaken by an extra must allow it to pass.

When it is desirable that a work extra shall at all times protect itself while on working limits, it may be done by adding to (1) the following words:

(*d.*) *protecting itself.*

A train receiving this order must, whether standing or moving, protect itself within the working limits in both directions in the manner provided in Rule 99.

Whenever an extra is given orders to run over working limits it must at the same time be given a copy of the order sent to the work extra.

To enable a work extra to work upon the time of a regular train, the following form may be used:

(*e.*) *Work Extra 292 will protect against No 55 between Berne and Turin.*

A train receiving this order will work upon the time of the train mentioned in the order, and protect itself against it as provided in Rule 99.

The regular train receiving this order must run, expecting to find the work extra protecting itself within the limits named.

FORM J. HOLDING ORDER.

Hold —— at ——.

EXAMPLES.

(*1.*) *Hold No 2 at Berlin.*

(*2.*) *Hold all eastbound trains at Berlin.*

This order will be addressed to the operator and acknowledged in the usual manner. It must be respected by conductors and enginemen of trains thereby directed to be held as if addressed to them.

When a train has been so held it must not proceed until the order to hold is annulled, or an order given to the operator in the form:

"—— *may go.*"

Form J will only be used when necessary to hold trains until orders can be given, or in case of emergency.

FORM K. ANNULLING A REGULAR TRAIN.

(1.) —— of —— is annulled —— to——.

(2.) —— due to leave —— —— is annulled —— to ——.

EXAMPLES.

(*1.*) *No 1 of Feb 29th is annulled Alaska to Halifax.*

(*2.*) *No 8 due to leave Naples Saturday Feb 29th is annulled Alaska to Halifax.*

The train annulled loses both right and class between the points named and must not be restored under its original number between those points.

FORM L. ANNULLING AN ORDER.

"Order No —— is annulled."

If an order that is to be annulled has not been delivered to a train, the annulling order will be addressed to the operator, who will destroy all copies of the order annulled but his own, and write on that:

Annulled by order No ——.

EXAMPLE.

Order No 10 is annulled.

An order that has been annulled must not be reissued under its original number.

In the address of an order annulling another order, the train first named must be that to which right was given by the order annulled, and when the order is not transmitted simultaneously

to all concerned, it must be first sent to the point at which that train is to receive it and the required response made, before the order is sent for other trains.

FORM M. ANNULLING PART OF AN ORDER.

That part of Order No —— reading —— is annulled.

EXAMPLE.

That part of Order No 10 reading No 1 will meet No 2 at Sparta is annulled.

In the address of an order annulling a part of an order, the train first named must be that to which right was given by the part annulled, and when the order is not transmitted simultaneously to all concerned, it must be first sent to the point at which that train is to receive it, and the required response made, before the order is sent for other trains.

FORM P. SUPERSEDING AN ORDER OR A PART OF AN ORDER.

This order will be given by adding to prescribed forms, the words "instead of ——."

(1.) —— will meet —— at —— instead of ——.

(2.) —— has right over —— —— to —— instead of ——.

(3.) —— will display signals for —— —— to —— instead of ——.

EXAMPLES.

(*1.*) *No 1 will meet No 2 at Hong Kong instead of Bombay.*

(*2.*) *No 1 has right over No 2 Mecca to Medina instead of Mirbat.*

(*3.*) *No 1 will display signals for Eng 85 Astrakhan to Teheran instead of Cabul.*

An order that has been superseded must not be reissued under its original number.

In the address of a superseding order, the train first named must be that to which right was given by the order superseded, and when the order is not transmitted simultaneously to all concerned, it must be first sent to the point at which that train is to receive it, and the required response made, before the order is sent for other trains.

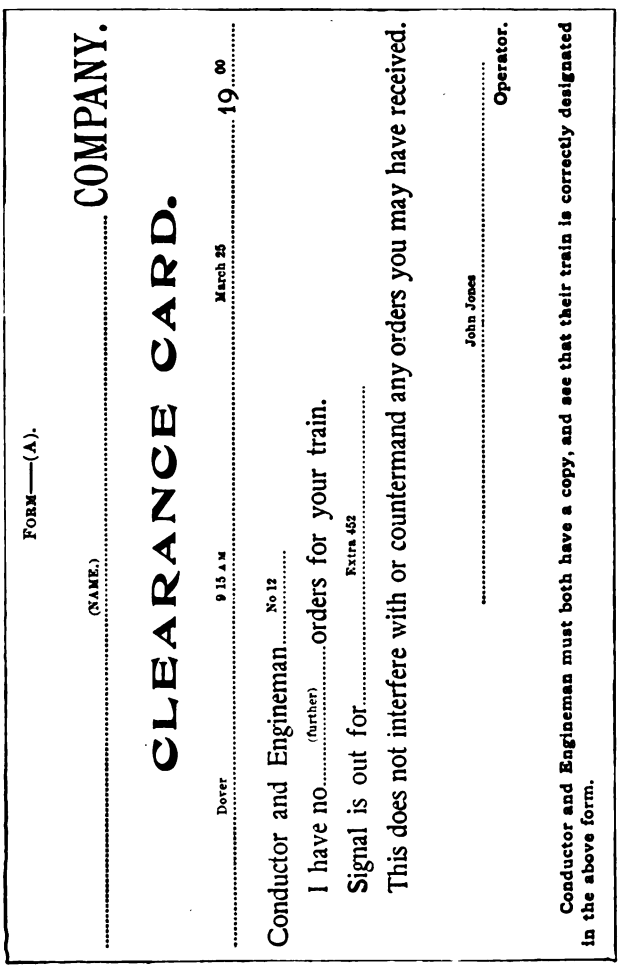

FORM—(A).

(NAME.) ..... COMPANY.

CLEARANCE CARD.

Dover ..... 9 15 A M ..... March 25 ..... 19 00

Conductor and Engineman ..... No 12

I have no ..... (further) ..... orders for your train.

Signal is out for ..... Extra 452

This does not interfere with or countermand any orders you may have received.

John Jones .....

..... Operator.

Conductor and Engineman must both have a copy, and see that their train is correctly designated in the above form.

(*To be printed on yellow paper.*)

STANDARD TRAIN ORDER BLANK FOR 31 ORDER.

FORM 31 . FORM 31

(NAME.) COMPANY.

TRAIN ORDER No. 10

March 27 19 00

To ..... | At ..... Station.

X ..... (Initials.) ..... Opr.; ..... 1 45 A M

Conductor and Engineman must both have a copy of this order.

Repeated at 2 20 A M.

Conductor	Engineman	Train	Made	Time	Opr.
Jones	Brown	45	Complete	2 20 A. M.	Black
	(Omit				
	this column				
	where				
	engineman				
	is not				
	required				
	to sign.)				

STANDARD TRAIN ORDER BLANK FOR 19 ORDER.

FORM 19 FORM 19

(NAME.) COMPANY.

TRAIN ORDER No. 10

March 27 19 00

To ..... At ..... Station.

X ..... (Initials.) ..... Opr.; ..... 1 45 A M

Conductor and Engineman must both have a copy of this order.

Made Complete time 2 16 P M. Black Opr.

A SERIES OF QUESTIONS

Relating to the Subjects Treated of in This Volume.

It will be noticed that the questions contained in the following pages are divided into sections corresponding to the sections of the text of the preceding pages, so that each section has a headline that is the same as the headline of the section to which the questions refer. No attempt should be made to answer any of the questions until the corresponding part of the text has been carefully studied.

LOCOMOTIVE BOILERS.

(PART 1.)

EXAMINATION QUESTIONS.

(1) (*a*) What is the duty of the ash-pan? (*b*) Why is there a door at each end?

(2) What is the difference between a double exhaust pipe and a single exhaust pipe?

(3) What important change takes place (*a*) when two elements combine chemically, and (*b*) when a compound is decomposed into its elements?

(4) Why is it important that the coal be broken to the proper size before firing?

(5) Why and how should an engine be prevented from "popping"?

(6) Mention two methods of supporting the crown sheets, and give a description of each.

(7) Explain how the exhaust steam creates a draft through the tubes and fire.

(8) What precaution should you take to avoid making smoke when at stations?

(9) How high a temperature, in degrees Fahrenheit, should be maintained in the firebox, and how can you judge of the temperature therein?

(10) How should an engine burning hard coal be fired?

For notice of copyright, see page immediately following the title page.

(11) (*a*) State the disadvantages of the crown-bar method of supporting the crown sheet. (*b*) State the advantages and disadvantages of the radial-stay method.

(12) What is the difference between a diamond stack and a straight stack?

(13) Give the composition of (*a*) air; (*b*) coal; (*c*) water; (*d*) wood.

(14) What are the results of holding the fire-door open when the engine is working?

(15) Suppose you were to instruct a fireman how to fire an engine burning soft coal, what instructions would you give?

(16) What are the advantages of a firebrick arch in a locomotive firebox?

(17) (*a*) What is the duty of the deflector plate used in extension front ends? (*b*) Does the position of the deflector plate affect the draft through the tubes, and, if so, how?

(18) (*a*) How should air be admitted to the fire? (*b*) What is the effect of admitting too much air?

(19) What is a *blower*, and how does it create a draft?

(20) (*a*) How are the firebox sheets supported? (*b*) To what strains are they subjected, and what produces the strains?

(21) (*a*) What is the *petticoat pipe?* (*b*) How does its position affect the draft through the fire and tubes?

(22) (*a*) Explain what takes place during the combustion of soft coal. (*b*) Which is the more difficult to burn thoroughly, the coke or the gases, and why?

(23) When, how often, and in what manner should the grates be shaken?

(24) What part of the boiler is subjected to the greatest pressure? Give reasons for your answer.

(25) (*a*) What is the smokebox? (*b*) What is the extension front, and what are its uses?

(26) Name four of the principal parts of a locomotive boiler, and state their duties.

(27) Explain what is meant by the *igniting temperature* of a substance.

(28) (*a*) How are clinkers formed? (*b*) Can their formation be prevented, and, if so, how?

(29) Are the same kinds of grate bars used both in soft-coal and in hard-coal burning engines? Give reasons.

(30) When the fire burns best at (*a*) the front end of the firebox, and (*b*) the back end, what does it indicate, and how can the fire be made to burn evenly?

(31) Are the steaming qualities of a locomotive boiler affected by its management? If so, in what way?

(32) How many heat units would be lost by the incomplete combustion of 1 pound of carbon?

(33) Why should heavy charges be avoided when firing?

(34) Describe a locomotive firebox.

(35) How many square feet of (*a*) direct heating surface, and (*b*) indirect heating surface, are usually allowed for each square foot of grate area?

(36) (*a*) If an engine steams poorly, to what may it be due? (*b*) Where would you look for the cause of the trouble?

(37) (*a*) Under what circumstances should the coal be wet before firing? (*b*) How much water should be used, and why?

(38) (*a*) What is meant by the *heating surface* of a locomotive boiler? (*b*) Which part of the heating surface is most effective?

(39) When should a blower be used, and when should it not be used?

(40) When is the best time to put fresh coal on the fire?

(41) How should soft coal be prepared for firing?

(42) What is (*a*) a wagon-top boiler? (*b*) an extended wagon-top boiler?

(43) (*a*) What is the function of the tubes? (*b*) Why are they made of small diameter?

(44) (*a*) How does the size of the nozzle on the exhaust pipe affect the fire? (*b*) Speaking generally, what size nozzle should be used?

(45) (*a*) What determines whether or not a given substance is a *combustible* or a *fuel*? (*b*) What is meant by the *combustion* of fuel? (*c*) Name the combustible substances, or fuel, in (1) coal; (2) wood; (3) oil.

(46) (*a*) What is *smoke*, and how is it formed? (*b*) How can it be prevented? (*c*) Why should it be prevented?

LOCOMOTIVE BOILERS.

(PART 2.)

EXAMINATION QUESTIONS.

(1) (*a*) What effect will a stopped-up suction pipe have on the working of an injector? (*b*) How can you clear it? (*c*) What effect will a leak in the suction pipe have?

(2) How would you start and stop a non-lifting injector?

(3) What is (*a*) a sight-feed lubricator? (*b*) a triple sight-feed lubricator?

(4) Why are the boiler check-valves placed so far ahead on locomotive boilers?

(5) How would you proceed to act in case of excessive overpressure in a locomotive boiler?

(6) (*a*) How are the gauge-cocks on a locomotive boiler generally placed with respect to the highest part of the crown sheet? (*b*) How high is the lowest gauge-cock on your engine placed above the crown sheet? (*c*) How many inches of water will there be on the crown sheet with one, two, and three gauges, respectively? (*d*) What is the least depth of water that can be safely carried on the crown sheet?

(7) (*a*) What effect will hot water in the suction pipe have on the working of an injector? (*b*) How can you start the injector working under such conditions?

For notice of copyright, see page immediately following the title page.

(8) If a feed-glass on either the Nathan or the Detroit lubricator should break, would it interfere with the working of the other feeds? Explain.

(9) (*a*) Which do you consider the better practice—to carry a high or a low water level in the boiler? Why? (*b*) What would you advise in regard to keeping a constant height of water in the boiler? Give your reasons.

(10) (*a*) What is the purpose of the glass water gauge with which boilers are sometimes provided? (*b*) Assuming there is one on your engine, how is it located with respect to the crown sheet and gauge-cocks, and what improvement on it can you suggest? (*c*) In replacing a broken gauge glass, what precautions should be observed?

(11) If there is an obstruction in the lifting or combining tubes of an injector, or in the spills, what effect will it have?

(12) What is the best and most economical method of feeding a locomotive boiler?

(13) What will be the effect on the reading of the glass water gauge (*a*) if the upper valve is closed or stopped up? (*b*) if the lower valve is stopped up? (*c*) if the upper valve is nearly stopped up?

(14) What effect will a worn-out choke plug have on the working of a lubricator?

(15) (*a*) How does the ascending and descending of a grade effect the water level in the boiler? (*b*) What should be the condition of the water supply in the boiler when about to ascend or descend a grade?

(16) (*a*) How much pressure does the atmosphere exert per square inch? (*b*) What is meant by *gauge pressure?* (*c*) How can the *absolute pressure* be determined from the gauge pressure?

(17) (*a*) What will be the effect of a slight leak in the suction pipe of an injector? (*b*) How can you test for a leak in the suction pipe?

(18) If the water in the feed-glasses of a lubricator becomes muddy, what does it indicate, and where would you look for the probable cause of the trouble?

(19) (*a*) What effect will a leaky overflow valve have on the working of an injector? (*b*) How can you tell when the overflow valve is leaking?

(20) Why are locomotive boilers provided with more than one safety valve?

(21) If the boiler check-valve is stuck partly open, and water wastes from the overflow of the injector, how would you free the check-valve, or, failing in that, how would you diminish or stop the waste at the overflow?

(22) What should be the condition of the fire while feeding the boiler? Give reasons for your answer.

(23) If, during cold weather, it is necessary to knock out the fire, what precautions should be taken to prevent injury from freezing?

(24) What is (*a*) a lifting injector? (*b*) a non-lifting injector? (*c*) To which type does the injector on your engine belong? (*d*) What are the essential parts of a lifting injector?

(25) (*a*) Is it good practice to entirely fill the oil reservoir of a lubricator? (*b*) What precautions should be observed immediately after filling the oil reservoir? Give reasons for your answers.

(26) Explain how the oil gets from the lubricator through the oil pipes to the steam chest.

(27) (*a*) What is *foaming?* How can you tell when a boiler is foaming, and what makes it do so? (*b*) What danger is there when the boiler is foaming badly? What should be done in such a case?

(28) (*a*) At what temperature does an injector usually deliver water to the boiler? (*b*) What is the highest temperature to which it is advisable to heat the water in the tank? Give reasons.

(29) (*a*) If a choke plug became stopped up, how would you clear it? (*b*) How would you clear a stopped-up sight feed?

(30) (*a*) If the reverse lever rattles and works hard after the engine has run for some time with wide-open throttle and short cut-off, to what would you attribute the trouble? (*b*) How would you remedy this?

(31) (*a*) When is a boiler said to *prime?* (*b*) What causes it, and how can you tell when the boiler is priming? (*c*) What bad effects does priming produce?

(32) (*a*) How should an injector be started and stopped? (*b*) How can it be used as a heater?

(33) In a sight-feed lubricator, what forces the oil through the regulating valves into the feed-glasses?

(34) Describe briefly the action of the Crosby safety valve.

(35) (*a*) What effect do animal and vegetable oils (such as lard oil and rape oil) have if introduced into the boiler? (*b*) What effect does mineral oil have in a boiler?

(36) Referring to the illustrations of the Nathan triple sight-feed lubricator, Figs. 18 and 19: (*a*) Why are the valves *4* provided? (*b*) What is the duty of the valves *18*? (*c*) When should the steam valve *V* be opened, and when

closed? (*d*) Except when filling the oil reservoir, the water valve 7 should always be kept in a *certain position.* What is this position—open or closed?

(37) If animal or vegetable oil should get into the tank, how would you get rid of it?

(38) State in detail what you would do in case a tube collapsed.

(39) (*a*) How is the working of an injector affected by an obstruction in the delivery tube, or by a leaky overflow valve? (*b*) If the tank is air-tight, will the injector continue to work? Explain. (*c*) How would you remove lime from the tubes of an injector?

(40) Describe the choke used with the Michigan lubricator, and state its location.

(41) What would you do in case the crown sheet became hot?

(42) (*a*) Is it possible to fill the boiler of a *dead* engine by the aid of another engine when there are suitable hose and connections at hand? If so, how? (*b*) Can the boiler be filled by towing the dead engine with another engine? If so, how?

(43) If the water level in the gauge glass does not constantly move up and down while the engine is in motion, would you regard its indications as safe to run by? Explain.

(44) (*a*) How often should a lubricator be blown out with steam? (*b*) How would you do this? (*c*) Why is it advisable to strain the oil before filling the lubricator?

(45) What would you do if the feeding apparatus failed to work and the water in the boiler got dangerously low?

(46) When we talk of water being *sucked up* by an injector, pump, or similar device, what force is it that really raises the water?

(47) (*a*) What are choke plugs, and for what are they used? (*b*) Where are they situated in the Nathan and in the Detroit lubricators?

(48) How will the working of the injector be affected if the strainer or suction pipe is partly stopped up, the tank valve nearly closed, or the hose lining collapsed, and what is the remedy in each case?

Steam, Cylinders, and Valve Gears.

(PART 1.)

EXAMINATION QUESTIONS.

(1) How many degrees are there between the freezing and boiling points on a Fahrenheit thermometer?

(2) When is steam considered *wet*, and when *dry*?

(3) Explain, briefly, the diagrams in Fig. 6.

(4) Why are pedestals provided with wedges and shoes?

(5) What is force?

(6) What is *absolute* temperature?

(7) Explain the difference in appearance of wet, dry, and superheated steam.

(8) When is an engine on the dead center?

(9) Explain the duty of the equalizer *R*, Fig. 21.

(10) What is *work*?

(11) Can the quantity of heat a body contains be determined from its temperature? Explain.

(12) If an engine brake is kept set while the engine descends a very long down grade, what will be the result? Explain.

(13) What is wiredrawn steam?

(14) State the main distinguishing features of the following types of locomotives: Eight-wheeled; mogul; ten-wheeled; consolidation; twelve-wheeled; decapod; Columbia; and Atlantic.

(15) How do the equalizing levers maintain the load on the drivers equal?

(16) What is the unit of work called, and how much work does it represent?

(17) How is temperature measured?

(18) What is (*a*) sensible heat, and (*b*) latent heat?

(19) Referring to Fig. 3, what must be done to make the piston move back and forth in the cylinder?

(20) Explain the difference between the rigid and the total wheel base of a locomotive.

(21) How is a locomotive boiler attached to the frames?

(22) How can the rate at which work is done be determined?

(23) What is meant by the *boiling point* on a thermometer?

(24) What is a unit of heat, or heat unit?

(25) Describe how the piston in Fig. 4 is made to move back and forth.

(26) What is the difference in the temperature of the steam when the absolute pressure is 140 and 200 pounds per square inch, respectively?

(27) Why are expansion plates necessary on a boiler?

(28) What is the unit of power? Explain fully.

(29) What is meant by the *freezing point* on a thermometer?

(30) What is *steam?*

(31) Explain how the engine shown in Fig. 5 works.

(32) What are the pedestals of a locomotive?

(33) How would you proceed to set up the wedges?

(34) What is a *wide-firebox* engine?

(35) What is the duty of the oil cellar in a driving box?

Steam, Cylinders, and Valve Gears.

(PART 2.)

EXAMINATION QUESTIONS.

(1) Why is a locomotive provided with crossheads and guides?

(2) Explain the use of the tumbling shaft, and state the reason for providing it with a counterbalance spring.

(3) (*a*) Explain what the inside and outside lap of a valve is. (*b*) Why is a valve given outside lap? (*c*) What is the *clearance* of a valve?

(4) How would you determine whether the valve rod and stem were of proper length?

(5) What is an eccentric?

(6) State how to find the *port marks.*

(7) Why is one eccentric called the *go-ahead*, and the other the *back-up?*

(8) State clearly the relative positions of the eccentrics to the main pin, drawing a diagram for that purpose if thought desirable.

(9) Explain how to measure the lead for the 10-inch notch, either for forward or backward motion.

(10) Why are boilers provided with steam domes?

(11) How would you proceed to key up the main rods of an engine?

(12) Explain why moving the reverse lever from one corner to the other reverses the motion of the engine.

(13) How does the Allen valve differ from the ordinary D slide valve, and what advantages are obtained by the use of the Allen valve?

(14) How can you determine whether the eccentric rods are of proper length?

(15) Explain how steam passes from the boiler into the steam chests.

(16) How would you proceed to key up the side rods of an engine?

(17) (*a*) In what position would you place the reverse lever, to give the valve its least travel? (*b*) In what position of the reverse lever will the valve have its greatest travel?

(18) What advantages are obtained by using the double-ported slide valve?

(19) What are *travel marks*, and how can you find them?

(20) In double-poppet throttle valves, why are the disks *a* and *b* (Fig. 2) made of unequal diameters?

(21) Explain the difference between a *direct* and an *indirect* valve.

(22) (*a*) If you move the reverse lever toward the middle notch, what effect will it have on the cut-off? (*b*) If you move it toward the corner, what effect will it have? Explain, in each case.

(23) Why are slide valves balanced?

(24) Explain how to determine the point of cut-off for the 6-inch notch.

(25) What advantages has the Pitkin throttle valve over the ordinary double-poppet valve?

(26) What is the *throw* of an eccentric?

(27) Why is a cylinder counterbored?

(28) Referring to Fig. 52, why is the hole *e* drilled through the valve?

(29) If the cut-off occurs later in one cylinder than in the other, how can this be remedied?

(30) How do the lap and lead of the valve affect the position of the eccentric?

(31) Describe briefly the general features of a metallic rod-packing.

(32) What is the effect of giving a valve (*a*) inside lap, (*b*) outside lap, or (*c*) clearance?

(33) Why are locomotive steam chests provided with relief valves?

(34) What is the effect of leaky steam pipes, and how would you locate the leak?

(35) Name the two duties of the link.

(36) Explain the following terms: admission, cut-off, release, and compression; and state at what parts of the valve stroke these events take place.

(37) Which is the more nearly balanced, a piston valve with narrow or with wide packing rings, and why?

(38) What are the steam and exhaust passages in the cylinder saddle for?

(39) Explain the terms *link arc* and *radius of link*.

(40) Describe briefly a method of balancing a slide valve.

(41) Before setting the valves of an engine, what precautions should be observed?

(42) In Fig. 12, what is the duty of the steam ports *a* and *b*, and whence do the ports *c*, *x*, and *y* lead?

(43) When is it necessary to provide a locomotive with a rocker?

(44) Explain what the *lead* of a valve is.

(45) Describe an accurate method of placing a locomotive on the dead center.

(46) How are pistons made to work steam-tight in the cylinders?

LOCOMOTIVE MANAGEMENT.

EXAMINATION QUESTIONS.

(1) What precautions should be taken when a bearing is discovered warming up?

(2) If, after the ordinary precautions have been taken, the bearing continues to heat, would you deem it advisable to use water on it?

(3) How should a locomotive be inspected?

(4) Give five examples of how to book defects discovered during inspection.

(5) In case a disconnected engine is being towed, how fast can it be run with safety?

(6) (*a*) What are the common causes of the main crank-pin heating? (*b*) If it becomes so hot that oil will not stay in the cup, what should be done?

(7) What would you do in case the rod brasses get so hot as to melt the babbit?

(8) What is the cause and effect of friction?

(9) How does oil, grease, and graphite make a bearing run cool?

(10) What kind of oil gives the best results in lubricating metallic packing, and what is the best method of applying it?

(11) What should you do in case of a hot eccentric?

For notice of copyright, see page immediately following the title page.

(12) Should water ever be used to cool a hot eccentric? Give reasons.

(13) What will cause metallic packing to blow?

(14) What is meant (*a*) by the flashing point of an oil? (*b*) by the burning point of an oil? (*c*) At what temperatures will engine oil and cylinder oil flash?

(15) How can you best determine whether a leak is in the throttle or in the dry pipe?

(16) What kind of waste is best for packing boxes, and how should it be prepared for use?

(17) Why should waste never be allowed to hang on the outside when packing boxes?

(18) If a collision is liable to occur on a railway crossing and cannot be avoided, what should the engineer of the train occupying the crossing do in order to reduce the effects of the collision as much as possible?

(19) What are the most common causes of pounds in an engine, and how can they be located?

(20) In the event of metallic packing failing on the road, how would you proceed to remedy the trouble?

(21) What are the most common causes of an engine blowing and how can the blows be located?

(22) What are the best methods of putting (*a*) a canton-flannel wick in a headlight? (*b*) a felt wick in a headlight?

(23) How should a headlight reflector be cleaned?

(24) What are the duties of an engineer before attaching his engine to the train?

(25) What will cause an engine to go lame?

(26) What is the most economical way of handling an engine, the speed and weight of the train being considered?

(27) What course should be pursued when an engine is off the track?

(28) How should sand be used under different conditions of service?

(29) On what points is the weight carried on (*a*) an eight-wheeled engine? (*b*) a mogul engine?

(30) What precaution should be observed when running an engine during cold weather?

(31) What is the usual cause of a steam chest breaking, and how can its breaking be prevented?

BREAKDOWNS.

EXAMINATION QUESTIONS.

(1) What is the most important thing to do in the event of a breakdown?

(2) What should you do (*a*) if the piston rod breaks or bends? (*b*) if the valve stem breaks?

(3) (*a*) Should a tire or an axle break on the front driver of an eight-wheeled engine, how would you block up? (*b*) How, if the back tire or axle breaks?

(4) Explain in detail how to take down (*a*) a main rod; (*b*) a side rod; (*c*) a valve rod.

(5) When a side rod is taken down on one side, why must its mate also be taken down?

(6) What should be done when the front cylinder head breaks?

(7) What should be done when the back cylinder head breaks?

(8) Should the tire or axle break on the trailer wheel of an Atlantic type engine, how should you block up?

(9) If the trailer spring or spring hanger of an Atlantic type engine breaks, how should you block up?

(10) (*a*) Explain a method of blocking a crosshead. (*b*) How can you secure the valve stem so as to hold the valve in mid-position?

(11) How should you disconnect an eight-wheeled engine for a broken main crankpin?

For notice of copyright, see page immediately following the title page.

(12) How should you disconnect in the event of (*a*) a top guide bar breaking? (*b*) a crosshead of an eight-wheeled engine breaking?

(13) How should you block up in case a front driving spring or spring hanger of an eight-wheeled engine breaks?

(14) How should you block up in case the back driving spring or spring hanger of an eight-wheeled engine breaks?

(15) What should you do if an equalizer of an eight-wheeled engine breaks?

(16) Explain how to proceed in the event of (*a*) a broken reverse-lever reach rod; (*b*) a broken link hanger, saddle pin, or tumbling-shaft arm.

(17) How should you proceed in the event of (*a*) a broken top rocker-arm? (*b*) a broken bottom rocker-arm?

(18) What is the best method to pursue when the throttle becomes (*a*) disconnected and open? (*b*) disconnected and closed?

(19) How should a mogul or consolidation engine be blocked up if the front tire or axle breaks?

(20) How should a mogul or consolidation engine be blocked up if the middle tire or axle breaks?

(21) How should a mogul or consolidation engine be blocked up if the back tire or axle breaks?

(22) How should you proceed in the event of the breaking of (*a*) a forward-motion eccentric strap or rod? (*b*) a back-motion eccentric strap or rod?

(23) Give your opinion as to the quickest way an eccentric can be reset on the road.

(24) If the pop-valve or whistle is blown out or broken off close to the dome, what is the best course to pursue?

(25) If the blow-off cock is blown out or broken off, how should you proceed?

(26) In case the truck equalizer on a mogul or consolidation engine breaks, how should you block up?

(27) If the intermediate equalizer on a mogul or consolidation engine breaks, how would you proceed to block up?

(28) How should you set a right back-up eccentric?

(29) If both eccentrics on a side slip, how should you proceed?

(30) Should (*a*) the top frame rail, (*b*) the bottom rail between drivers, (*c*) the pedestal brace or bolt, or (*d*) the frame between the front driving box and cylinder break, what methods should be pursued?

(31) How should you block up in the event of the front pin or "Aleck" bolt in the truck of a mogul or consolidation engine breaking?

(32) What is the best method of handling a broken steam chest so that you can proceed under steam?

(33) In case the cross-spring on a Brooks consolidation engine breaks, how should the engine be blocked up?

(34) If (*a*) a driving box, or brass, or (*b*) a wedge bolt breaks, what should be done so as to put the engine in condition to run?

(35) Describe how you would block up in the event of a front spring or hanger breaking on a mogul or consolidation engine.

(36) How would you proceed in the event of a broken valve seat?

(37) If a valve yoke on either side of an engine is broken, how can you locate and remedy the trouble?

(38) If a four-wheeled engine-truck axle or wheel breaks off, how should you block up?

(39) How should you block for a broken axle on the tender truck?

(40) If a spring hanger on a four-wheeled engine truck broke, how would you block up?

(41) If the center casting of a four-wheeled engine truck broke, what would you do?

(42) If the piston-rod or valve-rod gland breaks, what should you do?

(43) If a stud or valve-gland lug breaks, how should you make temporary repairs?

(44) How should you chain up for a broken tender-coupler casting so as to pull the train?

(45) Give the best methods of disconnecting an engine with a broken valve.

COMPOUND LOCOMOTIVES.

EXAMINATION QUESTIONS.

(1) Explain the operation of the Vauclain compound during both a forward and a backward stroke of the piston.

(2) Explain the operation of the reducing valve of the Richmond compound.

(3) What would you do in the event of a main rod on a Richmond compound breaking?

(4) How great a tension should the reducing-valve spring *s*, Fig. 42, of a Pittsburg compound have, and how is the tension of this spring regulated?

(5) What is a compound engine?

(6) Explain the duty of the starting valve of the Vauclain compound, and describe its general arrangement.

(7) Explain the operation of the Richmond compound when it is started as a compound locomotive.

(8) In the Schenectady compound, what is the duty of the oil dashpot, and how does it operate?

(9) Explain the operation of the Pittsburg compound when working simple.

(10) (*a*) How can the high-pressure cylinder of a compound be distinguished from the low-pressure cylinder? (*b*) Why is one cylinder called the high-pressure cylinder, while the other is called the low-pressure cylinder?

(11) Explain the operation of the starting valve of the Vauclain compound when its handle is in the positions *1*, *2*, and *3*, Fig. 14.

For notice of copyright, see page immediately following the title page.

(12) Explain the operation of a Richmond compound when it is started as a simple locomotive.

(13) How is the rapidity of movement of the oil-dashpot piston regulated in a Schenectady compound?

(14) Sometimes it is desirable to work a Pittsburg compound as a simple locomotive while carrying the reverse lever in notches other than the corner notch; how can this be done?

(15) What is a simple engine?

(16) Referring to Fig. 9, (*a*) why is a relief valve provided at *n*? (*b*) what is the duty of the relief valves *m*, *m*? (*c*) what is the duty of the valves *p* that are screwed into the heads of the low-pressure cylinder?

(17) Explain the duty of the over-pass valves in the Richmond compound, and state how they operate.

(18) Explain the operation of a Schenectady compound when starting compound.

(19) Explain the operation of the Pittsburg locomotive when working compound.

(20) State the difference between a simple and a compound engine.

(21) Explain how the cylinder-cock lever of the Vauclain compound when it also operates the starting valve should be handled under the different conditions of running.

(22) State the duty of the automatic air-discharge valve of the Richmond compound, and explain how it operates.

(23) Explain the operation of a Schenectady compound when starting simple.

(24) Explain clearly how you would start a train and bring it up to speed with a Pittsburg compound.

(25) For what class of service is a compound engine best adopted?

(26) How should the reverse lever of a Vauclain compound be handled to obtain the best results?

(27) State how a Richmond compound should be handled in starting a train, both under ordinary conditions and when on a grade.

(28) Explain how a Schenectady compound is changed from compound to simple, and again changed from simple to compound.

(29) Explain clearly how you would work a Pittsburg compound as a simple engine while switching.

(30) Compounds effect a considerable saving in fuel over simple engines; to what is the greater economy of the compounds due?

(31) (*a*) Explain in detail how you would start a train with a Vauclain compound and bring it up to speed. (*b*) How would you handle a Vauclain compound while drifting down-grade? (*c*) How would you handle a Vauclain compound while on a heavy up-grade?

(32) How should the reverse lever and throttle of a Richmond compound be handled to obtain the best results?

(33) Explain in detail how you would start a train and bring it up to speed with a Schenectady compound, working it as a compound engine.

(34) What precautions should you observe with a Pittsburg compound while drifting with the throttle closed?

(35) What advantage has the milder exhaust of the compound over the stronger exhaust of the simple locomotive?

(36) What would you do in the event of the breaking of (*a*) a high-pressure piston rod, or, (*b*) a low-pressure piston rod, of a Vauclain compound?

(37) Why is it especially important that the cylinder cocks of compounds be open while starting a train?

(38) Explain in detail how you would start a train and bring it up to speed with a Schenectady compound, working it as a simple engine.

(39) When and how should you convert a Pittsburg compound from compound to simple while working the locomotive?

(40) If properly handled, about how much coal will a compound locomotive save over the amount required by a simple locomotive in doing the same work?

(41) Explain the operation of the Rhode Island compound when it is started as a simple engine.

(42) What precautions should be observed with a Richmond compound while drifting?

(43) How should you proceed in the event of the main rod of a Schenectady compound breaking on (*a*) the high-pressure side? (*b*) the low-pressure side?

(44) What would you do in the event of the main rod on the high-pressure side of a Pittsburg compound breaking?

(45) What is a cross-compound locomotive?

(46) Explain the operation of the Rhode Island locomotive when it is working compound.

(47) Explain how the cylinder-lubricator feeds should be set for a Richmond compound, and give reasons for so setting them.

(48) Explain how the intercepting valve of a Pittsburg compound is operated.

(49) What would you do in the event of the main rod on the low-pressure side of a Pittsburg compound breaking?

(50) (*a*) What is the duty of the intercepting valve of the Richmond compound, and why is it provided with the piston *p*? (*b*) What is the duty of the reducing valve?

TRAIN RULES.

EXAMINATION QUESTIONS.

(1) Define a train.

(2) (*a*) What is a regular train? (*b*) May it consist of sections?

(3) (*a*) What are extra trains? (*b*) How are they designated?

(4) What is a superior train?

(5) How is *right* conferred?

(6) How are *class* and *direction* conferred?

(7) Which is superior, right, class, or direction?

(8) How may one train be made superior to another?

(9) Over what trains does class give superiority?

(10) How are the different sections of a train designated?

(11) What is a train of (*a*) superior right? (*b*) superior class? (*c*) superior direction?

(12) What is a time-table, and what does it contain?

(13) (*a*) What is a pilot? (*b*) Is the pilot responsible for the movement of a train in his charge?

(14) What is the schedule of a train?

(15) What is a yard?

(16) What is a yard engine?

(17) Does a yard engine require a train order to work within designated yard limits?

(18) When a new time-table takes effect, what does it do?

(19) What will regular trains do if on the road when a new time-table takes effect, where Form B is used?

(20) When can a train created by a new time-table (that is, one not shown on the preceding time-table) start on its first trip?

(21) What is required of employes whose duty may require them to give signals?

(22) What signals must be used (*a*) by day? (*b*) by night?

(23) When are night signals to be displayed?

(24) What do you understand by the *initial point* of a train on any division?

(25) (*a*) How many *times* may be shown for a train at any point? (*b*) When two times are shown; what is the earlier and what the later? (*c*) When but one time is shown, which is it?

(26) How are the schedule meeting and passing points indicated on the time-table?

(27) When both the arriving and leaving time of a train are in full-faced type, what does it indicate?

(28) What are the color signals?

(29) What does (*a*) red indicate? (*b*) white? (*c*) green and white combined?

(30) When there is more than one train to meet or pass a train at any point, how is attention called to it?

(31) What sign placed before the figures of the schedule of a train indicates (*a*) regular stop? (*b*) flag stop? (*c*) stop for meals? (*d*) leave? (*e*) arrive?

(32) What does (*a*) green indicate? (*b*) blue?

(33) What is a fixed signal?

(34) What method is used for giving visible signals other than fixed signals?

(35) What is indicated when a hand, lamp, or flag is (*a*) swung across track? (*b*) raised and lowered vertically? (*c*) swung vertically, in a circle, across the track, when train is standing? (*d*) swung vertically, in a circle, at arm's length, while train is running? (*e*) swung horizontally in a circle while train is standing? (*f*) held at arm's length above the head when train is standing?

(36) What is a fusee, and how is it used?

(37) What does a fusee indicate, and how must it be regarded, (*a*) when burning red? (*b*) when burning green?

(38) What does any object waved violently by any one on or near the track indicate?

(39) What are audible signals?

(40) What whistle signal indicates (*a*) stop? (*b*) release brakes? (*c*) flagman, go back to protect rear of train? (*d*) flagman, return from west or south? (*e*) flagman, return from east or north? (*f*) train parted?

(41) How long should the signal for "train parted" be continued?

(42) What is the whistle signal (*a*) to back the train? (*b*) to call for signals? (*c*) to call attention of other trains to signals carried for following sections?

(43) What is the whistle signal for (*a*) approaching public crossings at grade? (*b*) approaching stations, junctions, and railroad crossings at grade?

(44) What does a succession of short blasts of the whistle indicate?

(45) (*a*) What does the explosion of one torpedo indicate? (*b*) What does the explosion of two torpedoes indicate?

(46) When two torpedoes are used as a caution signal, how far apart should they be placed?

(47) What means are used for conveying signals from the cars to the engine of a passenger train?

(48) What is the bell-cord or air signal (*a*) to start the train? (*b*) to stop at once? (*c*) to back the train? (*d*) to stop at next station? (*e*) to apply or release air brakes? (*f*) to reduce speed? (*g*) to call in flagman?

(49) What light must be displayed at the front of every train by night?

(50) What must be done with the headlight when a train turns out to meet another, or is standing to meet trains at end of double track or junction points?

(51) (*a*) How should yard engines display headlights? (*b*) When not provided with headlight at rear, what should be used?

(52) Should yard engines display markers?

(53) (*a*) What signals should be displayed at the rear of a train, and what are they? (*b*) What should be done with these signals when the train turns out to meet, or be passed by another train?

(54) What signals should be displayed by the several sections of a train?

(55) What signals should be displayed by an extra train?

(56) When two or more engines are coupled to a train, which of them should display signals?

(57) If only one signal is shown upon the front of an engine when really two signals are required, what does it indicate?

(58) When cars are *pushed* by an engine, what should be displayed upon the front of leading car?

(59) (*a*) What does a blue signal displayed at one or both ends of an engine, car, or train, indicate? (*b*) Who is authorized to remove blue signals that have been displayed? (*c*) Should cars be placed on the same track so as to intercept the view of blue signals?

(60) What does a signal imperfectly displayed, or the absence of a signal at a place where a signal is usually shown, indicate?

(61) How are trains classified, and what are the respective rights of different classes?

(62) When does a regular train lose both right and class?

(63) When a train becomes twelve hours behind its schedule time, how can it be moved?

(64) What should be done before a train leaves its initial point or a junction, or passes from double to single track?

(65) How will a train proceed when leaving its initial point on any division, or a junction point, when a train of the same class in the same direction is due?

(66) What is required of an inferior train?

(67) What must be done by a train that fails to clear the main track by the time required by the rules?

(68) At meeting points between trains of the same class, (*a*) when must the inferior train clear the main track? (*b*) How should it take the siding? (*c*) If necessary to back in, what must be done?

(69) (*a*) At meeting points between trains of different classes, how much must the inferior train clear the superior train? (*b*) How much must an inferior train keep off the time of a superior train in the same direction?

(70) What should be done at schedule meeting and passing points, if the train to be met or passed is of the same class?

(71) When the expected train of same class is not found at the schedule meeting or passing point, how must the superior train approach all sidings?

(72) (*a*) If one train overtakes another that is disabled and cannot proceed, what will the first-mentioned train do? (*b*) What will the disabled train do?

(73) How will a regular train falling back on the time of another train of the same class be governed?

(74) How far apart must trains in the same direction be kept?

(75) By whose orders are (*a*) signals displayed for a following section, (*b*) extra trains run?

(76) When signals displayed for a following section are taken down at any point before that section arrives, what must be done?

(77) (*a*) How should trains approach end of double track, junctions, railroad crossings at grade, and drawbridges? (*b*) Where must all trains stop?

(78) When a train stops where it is liable to be overtaken by another train, what must be done?

(79) Give the flagging rule on the road you are employed on.

(80) When a flagman is recalled, what must he do?

(81) Who is responsible for the safety of trains?

(82) How must switches be left after being used?

(83) Who is responsible for switches used by a train being left in proper position?

(84) (*a*) If a train should part while in motion, what should be done? (*b*) What will a train coming up behind the detached portion of a train do?

(85) What should be done in case of doubt or uncertainty?

(86) By whose authority and in whose name are train orders issued?

(87) To whom should train orders be addressed?

(88) Should train orders be accepted if they contain alterations, interlineations, or erasures?

(89) How many copies of a train order should be delivered to a train?

(90) (*a*) What is required upon a train order to make it valid? (*b*) Name all the items required. (*c*) How is a train order identified?

(91) (*a*) How are regular trains designated in train orders? (*b*) How are extra trains designated?

(92) What should the person receiving a train order do before signing it?

(93) Who should sign for train orders?

(94) (*a*) Who should deliver copy of train orders to engineman? (*b*) What should the engineman do with an order upon receiving it?

(95) (*a*) When a train order has been repeated or the "X" response sent before "complete" has been given, how must it be regarded? (*b*) Can the order be otherwise acted upon until "complete" has been given?

(96) If the line fails before an office has repeated an order or has sent the "X" response, how will the order be regarded?

(97) If a train finds a signal displayed on arrival at a station, and is informed by the operator that the line has failed before order was repeated or the "X" response sent, what will be required to release the train from that signal?

(98) How should an order be addressed that is to be delivered to a train at a point that is not a telegraph station?

(99) (*a*) What should the person do on receiving an order to be delivered in this manner? (*b*) How many copies should he receive, and what should he do with them?

(100) (*a*) Whose signatures should he obtain upon one of the copies? (*b*) What should he do with the copy on which the signatures are obtained?

(101) (*a*) When a train is named in an order, how much of it is included? (*b*) What does each section of a train require?

(102) If a train receives an order to meet a designated regular train at a given point, no sections being specified, and that train is found upon its arrival to be carrying signals for a following section, what will the other train do?

(103) How long do train orders continue in effect?

(104) Can any part of an order be superseded or annulled?

(105) What becomes of train orders held by regular trains, when such trains lose right and class, as by Rules 4 and 82?

(106) (*a*) What signal is used to stop trains for orders? (*b*) When this signal is displayed, what is required by trains?

(107) If the signal is not displayed at a night office, what must be done?

(108) When two or more trains are given an order to meet at a certain point, as per Form A, what will they do?

(109) When two trains are given an order stating that one will pass the other at a designated point, as per Form B, what will they do?

(110) When the order states that the following train will pass the other when overtaken, what will they do?

(111) When two trains are given an order stating that one will pass and run ahead of the other from and to a designated point, what will they do?

(112) What should be the speed of the second-named train between the points designated?

(113) (*a*) If one regular train is given the right over another train in the opposite direction between designated points, as per Form C, how will they be governed? (*b*) If the trains meet at either of the designated points, which train should take the siding? (*c*) If they meet between the designated points, which train should take the siding? (*d*) If the second-named train reaches the point last named in the order before the other arrives, what will it do? (*e*) If the second-named train, before meeting the other, reaches a point within or beyond the limits named in the order, what will they do?

(114) (*a*) If the order states that a specified extra train has the right over a designated regular train from and to designated points, how will each train be governed? (*b*) When is the order fulfilled?

(115) (*a*) If the order states that a specified work-extra has right over all trains between designated points, what right does the order confer upon it? (*b*) How will other trains be governed?

(116) Can other trains go within the work-train limits until the order is annulled?

(117) (*a*) If an order is given stating that regular trains have right over a designated regular train between two designated points, as per Form D, what right does it confer upon the regular trains receiving it? (*b*) How will the regular train designated in the order be governed?

(118) (*a*) If an order is given stating that a certain train will run a given time late from and to designated points, as per Form E, how will it be governed? (*b*) How will other trains receiving this order run with respect to the train named in the order?

(119) (*a*) If an order is given stating that a certain train will wait for another train at a designated point until a specified

time, as per Form E, how will it be governed? (*b*) How will the second-named train run with respect to the time shown in the order?

(120) (*a*) If an order is given stating that a designated engine will run extra from and to designated points, as per Form G, what right does it give? (*b*) Is the train receiving this order required to protect against extra trains?

(121) (*a*) If an order is given stating that a designated engine will leave a certain point at a given time and date and run upon a schedule embodied in the order, with right over all trains, as per Form G, what right will it have? (*b*) If the order specifies particular trains over which the extra is given the right, what will it do? (*c*) How will trains over which the extra is thus given right be governed?

(122) (*a*) If an order is given stating that a designated work-extra will work from a specified time until a specified time between designated points, as per Form H, what right does it give? (*b*) If to this order an addition is made requiring this train to keep clear of, or protect against, a designated extra after a specified time, what will they do? (*c*) How will the extra train named in the order be governed?

(123) If an extra train receives an order requiring it to protect against a designated work-extra between two designated points, how will the first-named train be governed?

(124) (*a*) If the words "protecting itself" be added to the working order given to a work-extra, how will it be governed? (*b*) How will other extra trains receiving this order run with regard to the work-extra?

(125) (*a*) If an order is given stating that a designated work-extra will protect against a certain regular train between designated points, what right does it confer? (*b*) How will the regular train named in the order be governed?

(126) (*a*) To whom are holding orders addressed? (*b*) How must they be regarded by trainmen and enginemen?

(127) When a train is so held, what is necessary before it can proceed?

(128) (*a*) Will any orders received by a train, addressed to the train, release them from holding order? (*b*) To whom should the order permitting them to go be addressed?

(129) (*a*) If an order is given stating that a designated train is annulled, what does it do? (*b*) How will other trains be governed?

(130) Can a train once annulled be restored under its original number?

(131) (*a*) If an order is given stating that a designated order is annulled, what does it do? (*b*) Can the order thus annulled be reissued under its original number?

(132) Can part of an order be annulled, and if so, how?

(133) When part of an order is annulled, how does it affect the remaining portion?

(134) When an order is superseded by another, what effect does it have on the first order?

(135) Can an order that has been superseded be restored under its original number?

(136) At what time of the day do you generally find that a new series of train-order numbers begin?

INDEX.

A.	Sec.	Page.
Absolute zero	7	11
Action of injector	6	15
Adjusting the cut-off	8	84
Admission	8	52
"	8	57
Advantages of compound engines	10	2
Air	5	38
" sanders	6	77
" supply, Regulation of	5	49
" whistle or bell-cord signals	11	15
" " " " " "	11	59
Allen valve	8	62
American balanced valve	8	69
Angle of advance	8	54
Annulling an order, Form L	11	77
" part of an order, Form M	11	78
" regular train, Form K	11	77
Anthracite coal	5	36
Approaching, meeting, and passing points	11	23
" stations	9	34
Atlantic type engine	7	39
" " "	9	119
" type engine, Broken axle of trailing wheel on	9	122
" type engine, Broken front axle on	9	121
" type engine, Broken front spring on	9	123
" type engine, Broken main axle on	9	122
" type engine, Broken main driving spring on	9	122
" type engine, Broken side rod or front pin on	9	119
" type engine, Broken tire on front driver of	9	119
" type engine, Broken tire on main driver of	9	119
" type engine, Broken tire on trailer wheel of	9	121
Atomic weight	5	40
Atoms	5	32
Attaching boiler to frame	7	45
Audible signals	11	58

B.	Sec.	Page.
Back-up eccentric	8	46
Bad steaming engines	5	29
Balanced valves	8	66
" " Necessity of balancing	8	66
Baldwin compound (Two-cylinder)	10	10
" " " "	10	34
" compound, Broken main rod, high-pressure side of	10	41
" compound, Broken main rod, low-pressure side of	10	41
" compound, Broken valve stem of	10	42
" compound, Failure of intercepting, or of reducing valve of	10	42
" compound, Operating valve of	10	39
" compound, Operation of	10	40
" compound, Reducing valve of	10	36
" compound (Vauclain)	10	9
" compound, Blows of	10	31
" compound, Broken high-pressure piston rod on	10	29
" compound, Broken low-pressure piston rod on	10	30
" compound, Broken main rod on	10	29
" compound, Broken valve stem on	10	30
" compound, Crosshead of	10	12
" compound, Cylinder-cock lever on	10	25
" compound, Handling a	10	27
" compound, Operating a	10	25
" compound, Operation of a	10	17
" compound, Other breakdowns of	10	30
" compound, Piston valves of	10	13
" compound, Relief valves for	10	22
" compound, Reverse lever of	10	26

	Sec.	Page.
Baldwin compound, Starting valve of	10	20
" compound, Steam chest of	10	16
" compound, Valve bushing of	10	16
" compound, Water valves for	10	24
Belpaire boiler	5	2
Bent piston rod	9	81
Bissell truck	7	57
Bituminous coal	5	36
" "	5	47
Blocking the crosshead	9	61
Blow in piston valve	9	49
Blow-off cock blown out	9	90
Blower	5	28
Blows	9	47
"	10	42
" Baldwin compound	10	31
" " two-cylinder compound	10	42
" Pittsburg compound	10	78
" Richmond compound	10	58
" Schenectady compound	10	69
Boiler attachments	6	1
" feeding and management	6	82
" Feeding the	6	85
" inspection	6	97
" Oil in	6	91
Boilers, Blowing off	6	95
" Construction of	5	4
" Excess of pressure in	6	96
" Explosions of	6	98
" Types of	6	1
Boiling point	7	10
Breakdowns	9	57
Broken axle on four-wheeled engine truck	9	94
" back end of main-rod strap	9	84
" " motion eccentric strap or rod	9	67
" crosshead	9	85
" cross-spring on Brooks consolidation engine	9	151
" cylinder head	9	82
" driving box or brass	9	92
" false valve seat	9	78
" forward-motion eccentric strap or rod	9	67
" frame	9	91
" front driving spring	9	149
" " end main-rod strap	9	84
" " pin of truck equalizer	9	152
" guide	9	85
" link hanger	9	65
" long truck equalizer	9	152
Broken main crankpin	9	83
" or burned off grate bars	9	90
" piston rod	9	82
" " stuffingbox stud and lug of gland	9	81
" reverse lever	9	85
" " " reach rod	9	65
Broken saddle pin	9	65
" second driving spring	9	151
" steam chest	9	50
" " "	9	79
" " " and cylinder	9	83
" tender-coupler casting	9	96
" " truck axle	9	96
" " " wheel	9	95
" top or bottom rocker-arm	9	66
" tumbling shaft arm	9	65
" valve	9	78
" " seat	9	75
" " stem stuffingbox gland	9	74
" " yoke	9	72
" wedge bolt	9	92
Burning point of oils	9	11

C.

	Sec.	Page.
Caloric value of fuel	5	35
Capacity of injectors	6	25
Carbon	5	34
"	5	42
" and hydrogen	5	41
" dioxide	5	41
" "	5	44
" monoxide	5	41
" "	5	44
Carbureted hydrogen	5	42
Care of headlights	9	20
" " locomotives	9	4
" " switches	11	30
Carrying out train orders	11	31
Cause of friction	9	5
Changing point of cut-off	8	47
Chemical combination	5	38
Circulation in boiler	6	84
Classification of trains	11	20
" " "	11	61
" signals	11	5
Class of trains	11	5
Clearance	8	51
" card	11	50
" "	11	79
Climbing grades	9	27
Clinker, Formation of	5	58
Coal	5	35
Coking system of firing	5	56
Cold weather, Precautions when disconnected in	9	88

	Sec.	Page.
Collapsed tubes	6	96
Columbia type of engine	7	39
Combination by weight	5	40
Combustion	5	41
" Air required for	5	48
" and firing	5	32
" Incomplete	5	41
" of coal	5	47
" Rate of	5	16
Complete combustion	5	41
" " Air required for	5	42
" engine	7	31
Compound, Advantages of the	10	2
" Cost of running repairs of	10	8
" engine	10	1
" locomotives	10	1
" substance	5	32
Compounds	5	34
" Economy of	10	4
" " "	10	7
" " " fuel in	10	5
" Milder exhaust of	10	7
" Non-receiver	10	9
" Prominent types of	10	9
" Rates of combustion of	10	6
Compression	8	53
Conduction	6	82
Conservation of energy	7	8
Consolidation engine	7	37
" "	9	142
" engine, Broken axle on second driving wheel of	9	147
" engine, Broken back driving axle on	9	149
" engine, Broken back section of side rod on	9	143
" engine, Broken front driving axle on	9	145
" engine, Broken front section of side rod on	9	142
" engine, Broken middle section of side rod on	9	143
" engine, Broken third or main axle on	9	148
" engine, Broken tire on back driver of	9	145
" engine, Broken tire on front driving wheel of	9	143
Consolidation engine, Broken tire on second driver of	9	143
" engine, Broken tire on third or main driver of	9	145
Connecting-rods	8	31
Consumption of gaseous products	5	50
Corrosion	6	93
Counterbalance	7	49
Crosby safety valve	6	13
Crosshead and guides	8	27
Crossheads, Types of	8	28
Cross-over, Compound	10	10
Crown-bar method of staying crown sheet	5	6
" sheet, Methods of staying	5	6
Cut-off	8	52
"	8	55
" Adjusting the	8	84
" Changing the point of	8	47
" Determining the point of	8	83
Cylinder	8	17
" and steam chest	8	17
" condensation	10	5
" groaning	9	47
" saddle	8	12

D.

	Sec.	Page.
Damaged front end	9	55
" smokestack	9	55
Dead center	7	35
" " Finding the	8	76
Decapod	7	37
Definitions, Train rule	11	52
Deflector plate	5	21
Delivery of order at non-telegraph station	11	39
Determining the length of valve rod	8	79
" " point of cut-off	8	83
" whether eccentric rods are of proper length	8	81
Detroit air-pump lubricator	6	73
" triple sight-feed lubricator	6	52
Diamond stack	5	16
" "	5	23
Difference between compound and simple locomotives	10	2
Direct heating surface	5	14
Directions for trains to pass, or run ahead of another train	11	71
Disconnecting rods	9	58
" solid-end main rod	9	60
" strap-end main rod	9	59
" valve rod	9	58

	Sec.	Page.
Displaying signals for following section	11	25
Dome	8	3
Double exhaust pipe	5	25
" expansion engine	10	1
" heading	11	17
" ported valve	8	64
" sight-feed lubricator	6	43
Draft appliances	5	20
" Insufficient	5	29
Driving box	7	53
" gear	8	19
" wheels	7	48
Dry pipe, Leaky	9	44
" steam	7	19
Dunbar packing	8	22
Duplicates of order	11	38
Duties of employes	11	2
" " engineer before attaching engine to train	9	24

E.

Eccentric and strap	8	38
" Construction of	8	39
" Function of	8	38
" strap	8	41
" Throw of	8	40
Eccentricity	8	40
Eccentrics	8	37
Economical boiler feeding	6	86
Economy in the use of steam	9	27
Effects of heat	7	13
" " lap and lead	8	60
Eight-wheeled engine	7	36
" " "	9	97
" " engine, Broken back axle of	9	102
" " engine, Broken back driving spring or hanger on	9	104
" " engine, Broken equalizer of	9	106
" " engine, Broken front axle of	9	102
" " engine, Broken front driving spring or hanger of	9	102
" " engine, Broken side rod or back pin of	9	97
" " engine, Broken tire on back driver of	9	101
" " engine, Broken tire on front driver of	9	97
Elementary engine	7	31
Elements	5	32
" and compounds	5	32
Employes, Duties of	11	2
Energy	7	5
Engine bell, Ringing	11	19
" lights	11	15
" pushing cars	11	17
" trucks	7	54
Engines, Bad steaming	5	29
Equalizing lever	7	47
Exhaust out of square	9	51
" pipes	5	25
Extended wagon-top boiler	5	2
Extension front	5	17
Extra	11	52
" trains	11	5
" "	11	52
" "	11	74

F.

Failure of ash-pan	9	52
" " spark-arresting devices	9	52
Feeding boiler on grades	6	86
" the boiler	6	85
Finding dead center	8	76
Firebox	5	4
" Temperature in	5	51
Firebrick arch	5	10
Firing	5	55
" heavy	5	57
" in stations	5	61
Flagmen, Communications from	11	30
Flag stations, Stopping at	11	19
Flanged tires	7	53
Flashing point of oils	9	10
Flow of oil to steam chest	6	66
Fluid friction	9	5
Foaming	6	87
Follower plate	8	20
Following section, Displaying signals for	11	25
Foot-pound	7	3
Force	7	1
Formation of clinker	5	58
" " smoke	5	52
Forms of orders	11	43
" " "	11	70
Forward-motion eccentric	8	46
Four-cylinder compound	10	9
" wheel truck	7	55
Frames	7	41
Freezing point	7	10
Friction	9	4
" Causes of	9	5
" Effects of	9	4
" Fluid	9	7

	Sec.	Page.
Friction, Kinds of	9	5
" Rolling	9	5
" Sliding	9	5
" Starting	9	6
Front end, Damaged	9	55
Fuel, Calorific value of	5	35
Fulfilling, superseding, or annulling an order	11	41
Full gear backward	8	47
" " forward	8	47
Fusee signals	11	13

G.

Gauge-cocks and water gauge	6	1
" pipe	6	8
" pressure	6	9
Gauges	6	1
General rules	11	51
Giving regular trains right over a given train	11	72
" the "X" response	11	40
" train the right over opposing train	11	71
Go-ahead eccentric	8	46
Good firing	5	61
Grate area	5	15
Grates	5	8
" Shaking the	5	59
Guides, Types of	8	28

H.

Hammer test	5	6
Hancock inspirator	6	35
Hand sand boxes	6	74
Hard coal	5	63
Harthan's metallic packing	8	26
Headlights, Care of	9	20
Heat defined	7	8
" effects and measurement of	7	8
" Effects of	7	13
" Measurement of	7	15
" of combustion	5	44
" unit	5	36
" Unit of	7	15
Heating surface	5	13
" " Amount of	5	14
" " Direct	5	14
" " Indirect	5	14
" " Total	5	14
Heavy firing	5	57
Height of water in boiler	6	1
" " " to carry	6	86
High-pressure cylinder	10	1
" " "	10	12
Holding order, Form J	11	76
Hole knocked in boiler	9	88
Horsepower	7	4
Hot bearings	9	39
" " Use of water on	9	39
Hot boxes, Packing on the road	9	14
How meeting and passing points are indicated	11	11
Hydrogen	5	33
"	5	42

I.

Igniting temperature	5	46
Imperfectly displayed signals	11	19
Improved Detroit lubricator	6	55
" Nathan lubricator	6	51
Inch of pressure	6	12
Incomplete combustion	5	41
Independent air-pump lubricators	6	71
Indication of priming	6	89
Indirect heating surface	5	14
Inferior and superior trains	11	22
" class, Trains of	11	5
Initial station	11	10
" " Train leaving	11	21
Injector, Capacity of	6	25
" fails to raise water	6	38
" primes but will not force	6	39
" Temperature of water delivered by	6	17
" troubles	6	38
" tube	6	25
Injectors	6	14
" classes of	6	18
" fail on road	9	42
Inside lap	8	51
" " Effect of changing the	8	58
Inspection of locomotives	9	1
Intercepting valve, Richmond compound	10	10

J.

Jerome metallic packing	8	26
Junctions, crossings, etc., Approaching	11	27

K.

Keying up side rods	8	35
Kinds of trains	11	4
Kinetic energy	7	5

L.

Lamp signals	11	12
Lap	8	51
Latent heat	7	15
Leach sander	6	77
Lead	8	59
" Measuring the	8	80
" Trying the	8	80

	Sec.	Page.
Leaky dry pipe	9	44
Leaky steam pipes	8	11
" throttle	9	44
Life of train order	11	40
Lifting injectors	6	18
" "	6	21
Lights, Engine	11	15
" Yard-engine	11	16
Link	8	42
" arc	8	44
" hanger	8	37
" motion	8	36
Live and dead wedges	7	45
Locomotive Boilers, Part 1	5	1
" " " 2	6	1
" management	9	1
" Types of	7	36
Locomotives	7	36
Low-pressure cylinder	10	1
" " " Baldwin compound	10	12
" water	6	90
Lubricants	9	9
Lubrication	9	8
Lubricator, Care of	6	70
" Irregularities of feed in	6	63
" Location of	6	69
" Loss of oil in	6	65
" oil held in pipes	6	66
" Piping for	6	70
" Principle of operation	6	44
" Replacing broken feed-glass in	6	62
" troubles	6	62
Lubricators, Sight-feed	6	43

M.

Mack Injector	6	31
Main rods	8	33
" " Keying up	8	35
" tracks	11	6
Making stops	9	35
Management of locomotives	9	24
" Poor	5	31
Markers	11	16
Marking port marks	8	78
Meady muffled pop valve	6	14
Meaning of word "train" in an order	11	89
Measurement of temperature	7	9
Measuring the lead	8	80
Meeting points	11	11
" " for opposing trains	11	70
Metallic packing, Care of	9	18
" " Failure of	9	19
" " Worn	9	18
Metallic rod packing	8	23
Metropolitan injector	6	33
Michigan lubricator	6	58
Mid-gear	8	47
Mixtures	5	37
Mogul engine	7	37
" "	9	106
" engine, Broken axle on back driver of	9	112
" engine, Broken axle on front driver of	9	110
" engine, Broken axle on main driver of	9	111
" engine, Broken back section of side rod on	9	106
" engine, Broken front pin of truck equalizer on	9	117
" engine, Broken front section of side rod on	9	108
" engine, Broken front spring or hanger on	9	113
" engine, Broken intermediate equalizer of	9	115
" engine, Broken long equalizer	9	115
" engine, Broken main spring	9	113
" engine, Broken tire on back driver of	9	110
" engine, Broken tire on front driver of	9	108
" engine, Broken tire on middle driver of	9	108
Molecule	5	33
Monitor injector	6	29
Movements of trains	11	21
" " "	11	61
Multiangular packing	8	24

N.

Nathan air-pump lubricator	6	71
" non-lifting injector	6	20
" triple sight-feed lubricator	6	46
Necessary tools for locomotives	9	23
Nitrogen	5	33
Non-completion of order	11	38
" lifting injector	6	18
Northwestern type engine	9	125
" type engine, Broken cross equalizer of	9	131
" type engine, Broken front driving axle of	9	127
" type engine, Broken front driving spring of	9	128

	Sec.	Page.
Northwestern type engine, Broken intermediate equalizer of	9	133
" type engine, Broken main axle of	9	127
" type engine, Broken main driving spring of	9	128
" type engine, Broken side rod or front pin	9	125
" type engine, Broken tire on front driver of	9	125
" type engine, Broken tire on main driver	9	125
" type engine, Broken tire on trailer wheel	9	125
" type engine, Broken trailer axle	9	128
" type engine, Broken trailer equalizer	9	132
" type engine, Broken trailer spring	9	128
" type engine, Broken trailer spring, back hanger	9	131
" type engine, Broken trailer spring, front hanger	9	131
Nozzle, Size of	5	27

O.

Off the track	9	53
Ohio injector	6	22
Oil in boiler	6	91
Oiling	9	11
Order, Form A	11	43
" " B	11	42
" " "	11	44
" " C	11	44
" " D	11	45
" " E	11	45
" " F	11	46
" " G	11	47
" " H	11	47
" " J	11	48
" " K	11	49
" " L	11	49
" " M	11	50
" " P	11	50
Orders to be in writing	11	29
Outside lap	8	51
" "	8	58
" " Effect of changing the	8	58
Overtaking a superior train	11	25
Oxygen	5	33

P.

	Sec.	Page.
Packing boxes	9	12
" " Material used in	9	12
" cab fixtures	9	17
" hot boxes on the road	9	14
" piston rods and valve stems	9	16
Passing point	11	11
Petroleum oils	9	10
Petticoat pipe	5	20
Pilot	11	7
"	11	53
Piston, Old style	8	20
" rod, Packing a	9	16
" valve, Effect of wide packing rings in	8	73
" " Operation of	8	72
" valves	8	71
Pistons, Modern types of	8	22
Pitkin throttle valve	8	5
Pittsburg compound (Colvin)	10	11
" compound, Arrangement of valves and passages	10	71
" compound, Blows in	10	78
" compound, Broken main rod, high-pressure side of	10	77
" compound, Broken main rod, low-pressure side of	10	77
" compound, Broken valve stem of	10	78
" compound, Care of	10	77
" compound, Changing to simple	10	76
" compound, Description of	10	70
" compound, Intercepting valve of	10	72
" compound, Reducing valve of	10	73
" compound, Reversing cylinder of	10	72
" compound, Working	10	75
" compound, Working simple	10	73
" compound, Working simple	10	76
Points on which an engine is carried	9	55
Pony truck	7	57
Poor management	5	31
Pop-valve or whistle blown out	9	89
Port marks, Marking	8	78
Potential energy	7	6
Pounds	9	45
Power	7	4
Preparing bituminous coal for firing	5	55

	Sec.	Page.
Preparing fire for grade	5	60
" form 19	11	37
Prevention of smoke	5	54
Prime requisites of railroading	11	2
Priming	6	88
" Effects of	6	89
" Indications of	6	89
Properties of saturated steam	7	20
Protecting workmen under engines	11	18
Pushing cars, Precautions when	11	29
R.		
Radial-stay method of staying crown sheet	5	7
" stays	5	3
Radiation	6	82
Radius of link	8	44
Rate of doing work	7	4
Receiver, Richmond compound	10	10
Reducing the force of collision	9	54
Regular trains	11	4
" "	11	52
Regulation of air supply	5	49
Relation between heat and work	7	15
Relative position of eccentrics and main pin	8	61
Release	8	53
"	8	56
Removing side rods	9	62
Replacing broken feed-glass in lubricators	6	62
Reporting work	9	3
Responsibility for safety of train	11	30
Reverse lever	8	37
" " caught at short cut-off	9	52
Reversing the engine	8	46
Rhode Island compound	10	11
" " compound	10	78
" " compound, Arrangement of valves and passages of	10	79
" " compound, Broken main rod, high-pressure side of	10	83
" " compound, Broken main rod, low-pressure side of	10	83
" " compound, Broken valve stem of	10	83
" " compound, Changing from compound to simple	10	82
" " compound, Changing from simple to compound	10	82
Rhode Island compound, Description of	10	78
" " compound, Emergency exhaust valve of	10	80
" " compound, Intercepting valve of	10	79
" " compound, Operating as a compound	10	82
" " compound, Operating as a simple engine	10	83
" " compound, Reducing valve	10	80
" " compound, Working compound	10	81
" " compound, Working simple	10	81
Richardson balanced valve	8	67
" relief valve	8	68
Richmond (Mellin) compound	10	10
" compound	10	42
" compound, Arrangement of Intercepting valve of	10	44
" compound, Automatic air-discharge valve of	10	55
" compound, Blows	10	58
" compound, Broken main rod, high-pressure side of	10	58
" compound, Broken main rod, low-pressure side of	10	58
" compound, Broken valve stem of	10	58
" compound, Description of	10	42
" compound, Details of intercepting valve of	10	46
" compound, Details of reducing valve of	10	47
" compound, Drifting	10	57
" compound, Oiling the cylinders and valves of	10	57
" compound, Operating valve of	10	51
" compound, Operation as a compound locomotive of	10	49
" compound, Operation as a simple locomotive	10	50
" compound, Operation of	10	49
" compound, Operation of reducing valve of	10	48

	Sec.	Page.
Richmond compound, Overpass valves of	10	52
" compound, Starting a train with a	10	55
" compound, Use of operating valve of	10	56
" compound, Use of reverse lever and throttle	10	56
Right	11	53
Rights of trains	11	5
" Train losing its	11	20
Rigid wheel base	7	40
Ringing engine bell	11	19
Rocker	8	37
"	8	44
Rocking grates	5	8
" "	5	59
Rod packing, Metallic	8	23
Rods, Keying up	8	35
Rolling friction	9	5
Rules for movement by train orders	11	64
" " single track	11	54
" Signal	11	11
" Special	11	6
Running engines in cold weather	9	37
" trains in sections	11	16
" "work extras"	11	26

S.

Safety of train, Responsibility for	11	30
" valve	6	13
Same class, Trains of	11	5
Sand boxes	6	74
Sander, Air nozzle for	6	78
" Cab valve for	6	78
" Care of	6	80
" Operation of	6	79
" troubles	6	81
Saturated steam	7	17
Scale and mud	6	92
Schedule of a train	11	6
" " "	11	53
Schenectady (Pitkin) compound	10	10
" compound	10	60
" compound, Arrangement of valves and passages of	10	61
" compound, Blows of	10	69
" compound, Broken main rod, high-pressure side of	10	69
" compound, Broken main rod, low-pressure side of	10	69
Schenectady compound, Broken valve stem of	10	69
" compound, Changing from compound to simple	10	67
" compound, Changing from simple to compound	10	67
" compound, Description of	10	60
" compound, Emergency exhaust valve of	10	64
" compound, Intercepting valve of	10	62
" compound, Operating as a compound	10	65
" compound, Reducing valve	10	64
" compound, Working compound	10	65
" compound, Working simple	10	67
Sections, Train	11	52
Seller's injector	6	25
Sensible heat	7	15
Setting slide valves	8	75
" up wedges	7	54
Shaking the grates	5	59
Short smokebox	5	16
Side rods	8	34
" " Keying up of	8	35
" " Taking down	9	62
" tracks	11	53
Sidings	11	6
"	11	53
Sight-feed lubricators	6	43
Signal given by train carrying following section signals	11	17
" rules	11	11
" "	11	56
Signaling from cars to engine	11	18
Signals, Classification of	11	5
" Fusee	11	13
" imperfectly displayed	11	19
" Lamp	11	12
" Torpedo	11	14
" Whistle	11	13
Single exhaust pipe	5	27
" expansion engine	10	1
" track	11	6
Size of nozzle	5	27
Slide valve	7	29
" "	8	50
" " engine, Diagrams of a	7	32

	Sec.	Page.
Slide valve throttle	8	8
" valves, Setting of	8	75
Sliding friction	9	5
Slipped Eccentric, Locating a	9	68
" " Setting a	9	69
" " What to do in case of a	9	68
" Eccentrics	9	68
Smoke	5	52
" Formation of	5	52
" Prevention of	5	54
Smokestack	5	22
" Damaged	9	55
Smokebox	5	16
Soft coal	5	61
Special rules	11	6
Spreading system of firing	5	57
Spring gear, Arrangement of the	7	46
Standard clock	11	7
" code of train rules	11	1
" " " " "	11	51
" time	11	54
" train-order blank for orders	11	80
Starting friction	9	6
" of train	11	21
" trains	9	25
Station, Initial	11	10
Staybolts	5	5
Steam	7	16
" and exhaust passages	3	12
" and steam engines	7	16
" chest	7	29
" "	8	17
" cylinder	7	28
" " Operation of	7	30
Steam, Cylinders, and Valve Gears, Part 1	7	1
" " and Valve Gears, Part 2	8	1
" Effects of pressure on	7	21
" engine	7	27
" Formation of	7	16
" gauge	6	6
" " Testing and adjusting the	6	8
" lap	8	51
" pipes	8	10
" " Leaky	8	11
" piston	8	20
" tables	7	21
" " Examples on the use of	7	25
" Work done by	7	27
Stop signal	11	19
Straight stack	5	24
" top boiler	5	1
Superheated steam	7	18
Superior class, Trains of	11	5
" train	11	52
" " Overtaking a	11	25
" trains	11	5
Superseding an order or part of an order, Form P	11	78
Switches, Care of	11	30
Systems of firing	5	56

T.

	Sec.	Page.
Taking light engine over the road	9	38
" up play in wedges	7	44
Temperature	7	8
Temperatures in firebox	5	51
" of combustion	5	45
Ten-wheeled engine	7	37
Ten-wheel engines	9	135
" " engine, Broken axle on back driver of	9	137
" " engine, Broken axle on front driver of	9	136
" " engine, Broken axle on main driver of	9	137
" " engine, Broken back driving spring of	9	140
" " engine, Broken back section of side rod of	9	135
" " engine, Broken back tire of	9	136
" " engine, Broken front driving spring of	9	139
" " engine, Broken front section of side rod of	9	135
" " engine, Broken front tire of	9	135
" " engine, Broken main driving spring of	9	139
" " engine, Broken main tire of	9	135
" " engine, Broken spring or spring hanger on truck of	9	140
" " engine, Broken truck equalizer of	9	142
Thermometer	7	9
Throttle, disconnected and closed	9	87
" " " open	9	86
" Double-poppet	8	4
" leaky	9	44
" lever	8	8
" valve	8	3
" valve, Pitkin	8	5
" " Regrinding a	8	10
" " Vogt	8	8
Throw of an eccentric	8	40

	Sec.	Page.
Time orders	11	73
" Standard	11	7
" table	11	6
" "	11	53
" " Government of trains by	11	10
Times given on time table	11	10
Tippet attachment	6	67
Tires	7	53
Torpedo signals	11	14
Total heating surface	5	14
" wheel base	7	40
Train leaving initial station	11	21
" losing its rights	11	20
" movement, Keeping record of	11	42
" of superior direction	11	53
" " " right	11	53
" order	11	39
" orders	11	5
" "	11	31
" " Carrying out	11	31
" " Filling up of	11	34
" " Issuing of	11	33
" " Keeping record of	11	34
" " Life of	11	40
" " Nature of	11	32
" " Preparation of	11	33
" " Rules for movement by	11	32
" " Transmitting the	11	35
" " Use of	11	32
" " Wording of	11	35
" parting while running	11	28
" rules	11	1
" " Definitions of	11	4
" " Purpose of	11	1
" " Standard code of	11	1
" signals	11	15
" "	11	59
Trains, Classification of	11	20
" defined	11	52
" Extra	11	5
" Kinds of	11	4
" Movements of	11	21
" moving in same direction	11	24
" of inferior class	11	5
" running in sections	11	16
" Same class	11	5
" stopping or being delayed	11	27
" Superior class	11	5
" " "	11	53
" Superior	11	5
" to run on time	11	24
Transformation of energy	7	7
Triple sight-feed lubricator	6	43
Trying the lead	8	80
Tubes	5	11
Tumbling shaft	8	37
Tumbling shaft	8	45
Twelve-wheeled engine	7	37
Two-cylinder compound	10	9
Two-wheel truck	7	57
Types of boilers	5	1
" " crossheads	8	28

U.

Unit of work	7	3
Use of sand	9	36
" " signals	11	60

V.

Vacuum	6	10
" gauge	6	12
" Measuring a	6	11
Valve gear	8	36
" " Operation of	8	46
" rod, Determining the length of a	8	79
" stem, Packing a	9	16
Viscosity	9	8
Visible signals	11	56
Vogt throttle valve	8	8

W.

Wagon-top boiler	5	2
Water	5	34
" circulation	6	82
" gauge	6	3
" glass, Replacing a	6	6
" grates	5	9
" legs	5	4
" level in boiler	6	4
Wedges and shoes	7	44
" Setting up	7	54
Weight of atmosphere	6	9
Wet steam	7	19
Wheel base	7	40
" centers	7	49
When to fire	5	60
Whistle signals	11	13
Wide-firebox boiler	5	3
" " locomotive	7	39
Wiredrawn steam	7	20
Wood	5	36
Work	7	1
" and energy	7	1
Work extras	11	52
" "	11	75
" " Running of	11	26

Y.

Yard-engine lights	11	16
" engines	11	7
" "	11	53
Yards	11	6
"	11	53